
Koch
CABINETS
CLASSIC SERIES

Classic Series Page Revisions

PAGE #	CHANGE IMPLEMENTED
4	Removed Pencil Glaze
4	Added Rustic White Oak to upcharges
4	Adjusted Imperial Series (Plywood) upcharge
13	Added Rustic White Oak wood specie description
22	Removed Pencil Glazing from Specialty Finishes
24	Removed Pencil Glazing
27	Removed Bedford & Gateway door styles as being two doors over 46" tall
29-52	Removed Pencil Glazing
32, 34, 35, 39, 45, 49, 50, 52	Added Rustic White Oak as available wood species
46	Removed Spray No Wipe Stains from the Regency door style
46	Added note that Regency door style is not available in full overlay w/ DT-GSM
47	Added note that Ridgegate door style is not available in full overlay w/ DT-GSM
48	Riverton door style now only available with Shaker and 4348 edge; N/A with 950 edge
48	Riverton door style now available with slab drawer fronts
48	Added note that Riverton door style is not available in full overlay w/ DT-GSM
67	Added new wall cabinet 'W4815-2B'
75	Added note that 'the corbels are attached to the shelf, then sent separate…'
85	Added note 'Tambour N/A in Rift White Oak or White Oak'
86	Added note 'Tambour N/A in Rift White Oak or White Oak'
93	Added note 'Tambour N/A in Rift White Oak or White Oak'
130-140	Added wood specie availablity to each hood
146	Adjusted code for 'EASTLAND BATTEN' and 'ERWIN BATTEN'
147	Adjusted code for 'ELEGANCE BATTEN'
148	Adjusted code for 'FANFARE BATTEN'
154	Added Charcoal Mesh Filter Sets to PML's (Prof. Mesh Liner)
155	Added Charcoal Baffle Pad to PBL's (Prof. Baffle Liner)
175	Added note 'Knobs not included' to base cabinet w/ 5 spice drawers
176	Added new base cabinets with 4 rollouts (B45-4R-2B & B48-4R-2B)
184	Added note to Tall Oven Base 'we will fill in max 6" in the opening…'
185	Added note to Microwave Bases 'we will fill in max 6" in the opening…'
187	Added note to Wood Girasolo Shelves; 'minimum pull of 3"'
193	Added note that Riverton door style is N/A in Corner Base w/ Three Pie Cut Drawers
221	Added notes to medicine cabinets regarding flush mount and surface mount
226	Added spec information for Chef Pantries
243	Added Chef Pantry cabinets
254-257	Added note to Oven Cabinets 'we will fill in the opening (3" on each side)…'
280	Removed note' BBS not available in Rift Oak'; RWO now available!
304	Added new base organizer; Produce Pullout Baskets
308	Added note 'no depth modifications' to the Base Mixer Lift
310	Adjusted pricing and changed code for Stainless Steel Pegs (set of 4)
310	Added note to MagnaBase organizer (trimmable)
311	Added electrical pullout arm to the Drawer Charging Unit and adjusted pricing
312	Added minimum frame openings to the Tip Out Kit
319	Adjusted product codes for the Tall Pantry Organizers
327	Added new support
342	Separated Cabinet Side and Back product codes for FFDCS mods
344	Added additional notes and information to the pocket door modifications
379	Adjusted pricing of loose rollouts & noted that it includes drawer track
380	Added 1 1/4" Blumotion Detachable Clip Hinge (LH-BMC11/4)
381	Added Blum Full Extention Undermount Release Clip for drawer box
381	Added Blum 7/8 Extension Release Clip for drawer box
383	Added note that the loose drawer track for UMFE & 7/8 Ext are for rollouts & drawers
385	Added finishing instructions
386	Added Sherwin-Williams Paint in Gallon and Quart size
387	Added stains in pint size
388	Added spray no wipe stains in pint size
391	Added Gateway & Riverton door styles as Loose Drawer Fronts
393	Added information on Appliance Panels; Appliance Panel calculator on Dealer Portal
401	Added mod for Sample Doors; 'DRILL DOOR' (drill door for merchandiser)
402	Merchandiser will be constructed differently; doors will be held with pins, not brackets
402	Adjusted codes for new Merchandiser
403	Added Door Drill Jig for Merchandiser (pins)
403	Added loose support rails for merchandiser (pins)
404	Added Spray No Wipe Stains to the Sample Block Set
404	Added mod for SDK; 'DRILL SDK' (drill doors for merchandiser)
404	Added note 'No Specialty Finishes can be added to a sample block…'

PH: TOLL FREE 877-540-5624
PH: SHIPPING 866-739-5624
FAX: SHIPPING 785-336-6045
September 2026

See Door Specification Sheets for Availability on all Options

Upcharges are applied to entire order

WOOD UPCHARGE

*Unfinished	-10%
*Rustic Beech	2%
Paint Grade - Maple	5%
*Birch	7%
Maple	7%
Hickory, *Rustic Hickory	8%
Beech	8%
*Knotty Alder	8%
Cherry	13%
*Distress Ru Cherry (Includes Distress)	13%
Rustic White Oak	13%
White Oak	18%
Rift White Oak	30%
Paint Grade - HD	None
*Rustic Birch	None

See more information about Rustic woods on page 13

SERIES UPCHARGE

IMPERIAL	13%
(PLYWOOD SERIES)	

STAIN UPCHARGES

WIPING STAINS - No upcharge if not listed	
Stone	5%
DYE STAINS - No upcharge if not listed	
Chestnut	5%
Frontier	5%
Mocha	5%
ANTIQUE STAINS	
Capri Drift	23%
Fog Drift	23%
Dusk Drift	23%
White Drift	23%

PAINT UPCHARGE

Accessible Beige	15%
Black	15%
Capri	15%
Charcoal Blue	15%
Dusk	15%
Evergreen Fog	15%
Fog	15%
Foxhall Green	15%
Frost	15%
Ivory	15%
Oyster	15%
Shoji White	15%
Smoky Blue	15%
Taupe	15%
White	15%

OVERLAY UPCHARGE

Full Overlay	8%

DOOR UPCHARGES

Blumotion Soft Close Detachable Clip	54 EA
Molded door	231 EA

DRAWER/ROLLOUT UPCHARGES

Soft close undermount full extension	168 EA
Soft close undermount 7/8 extension	87 EA

DRAWER FRONT UPCHARGES

5 Piece front	129 EA
5 Piece molded front	270 EA

ACCENT GLAZE

See Door Style pages for availability!

Standard door styles	10%
Orleans/Madison door style	15%

HIGHLIGHTS

On Paint only - See Door Style pages for availability!

Umber, Ebony, Smoke	
Standard door styles	5%
Orleans/Madison door style	10%

FINISH OPTIONS

Rub Thru	10%
Distress is available on: K. Alder, Ru Beech, Beech, Cherry, Birch, Ru Birch	10%

SW CUSTOM COLORS

Available on any wood species that can be painted, specific to the door style chosen. 23%

Visit the Dealer Portal on our website for information and forms needed for Sherwin Williams Custom Colors.

For Dealer Portal access, please email kochmarketing@kochandco.com

TABLE OF CONTENTS

Upcharge Sheet	**4**
Contacts	**6**
Terminology	**7**
Cabinet Construction	**8-11**
Wood Descriptions	**12-13**
Policies	**15-26**
Door Styles	**27-58**
Wall Dimensions	**59-65**
Wall Cabinets	**66-128**
Wall Hoods Range Hoods, Vents, and Blowers	**129-156**
Base Dimensions	**157-164**
Bases	**165-198**
Vanity Dimensions	**199-206**
Vanities	**207-222**
Tall Cabinet Dimensions	**223-226**
Tall Cabinets	**227-258**
Office Dimensions	**259-262**
Office Cabinets Bookcases, Desk Bases, File Cabinets	**263-278**
Panels Finished Ends, Back Panels, End Panels, Etc.	**279-300**
Organizers Spice Racks, Organizers, Pull Outs, Waste Containers, Etc.	**301-322**
Wood Products Corbels, Buns, Legs, Onlays, Posts	**323-332**
Molding Profiles	**333-340**
Cabinet Modifications Full Overlay, Frame Mods, Finished Interiors, Drawer & Door Mods, Locks, ROSK, Partitions, Recess/Flush Toe	**341-366**
Accessories Fillers, Valances, What Not Shelves, Shelving, Etc.	**367-394**
Forms Disclaimers / Additional fillable forms can be found on our website under the Dealer Portal	**395-400**
Sample Items	**401-406**
Index ALL PRODUCTS LISTED IN THE INDEX SECTION	**407-414**

DRAWINGS IN PRICE BOOK NOT DRAWN TO SCALE

CONTACTS **Office Hours 7:30am - 4:30pm (Monday - Friday)** **www.kochcabinet.com**

CUSTOMER SERVICE OFFICE

TOLL FREE - PH: 877-540-5624 **FAX: 785-336-2348**
orders@kochcabinet.com

KELSEY BURDIEK - EXT. 2170
Customer Service Manager, Price Book
kelsey@kochcabinet.com

JUSTIN PERRY - EXT. 2980
Assistant Manager, Order Processing, Programming, Technical Questions and Modifications
jperry@kochandco.com

BARB HILTIBRAND - EXT. 2635
Customer Service, Order Entry, Acknowledgements
barb@kochcabinet.com

ABBY HOLTHAUS - EXT. 2990
Customer Service, Order Entry, Acknowledgements
abby@kochcabinet.com

KARA ROTTINGHAUS - EXT. 2825
Customer Service, Order Entry, Acknowledgements
kara@kochcabinet.com

CASEY WEYER - EXT. 2800
Custom Quotes
casey@kochcabinet.com

MADISON HOLTHAUS - EXT. 2790
Customer Service, Order Entry, Acknowledgements
madison@kochcabinet.com

MAXINE GLYNN - EXT. 2030
Customer Service, Receptionist, Order Entry
maxine@kochcabinet.com

SYDNEY RHOADS - EXT. 2160
Customer Service
srhoads@kochcabinet.com

NIKKI RETHMAN - EXT. 2060
Customer Service, Order Entry
nikki@kochcabinet.com

ONLINE ORDERING - PH: 877-540-5624

ELI STRAHM - EXT. 3546 **785-336-0180**
CabConnect Training, CabConnect Support & Information, Order Express Training, Order Express Support & Information
eli@kochcabinet.com

ERIC SCHMITZ - EXT. 3510 **785-369-3094**
IT Administrator
eric@kochandco.com

PLANT MANAGEMENT - PH: 877-540-5624

TROY NORDHUS - PLANT MANAGER - EXT. 2850 **785-336-1463**
Production Lead Times, Rushes
troy@kochcabinet.com

BARRY KOCH - PRODUCTION MANAGER/PLANT MANAGER
No extension - use E-mail barry@kochcabinet.com

TRACY COLLEY - TN PLANT MANAGER - EXT. 5300 **636-544-8876**
Production Lead Times, Rushes
tracy@kochtenninc.com

VICE PRESIDENT OF SALES

AMY BURGESS - EXT. 2430 **PH: 785-369-3036**
Training Sessions, Display Discounts, Rebates and Parade of Homes
amyb@kochcabinet.com

MARKETING

kochmarketing@kochandco.com

ANNE ALDERFER - EXT. 3500 **785-369-3093**
Price Book, 2020 Catalogs, Digital Media, Brochure Media, Website, Dealer Portal and Newsletters
anne@kochcabinet.com

DANA REINECKE - EXT. 3555 **785-369-3072**
Digital Media, Brochure Media, Website, Dealer Portal and Newsletters
dana@kochcabinet.com

KANSAS SHIPPING DEPARTMENT - PH: 866-739-5624

shipping@kochcabinet.com

RICHARD ENGELKEN - SHIPPING MANAGER - EXT. 2810 **785-369-3070**
Delivery Schedule, Trucking Damage, Freight Cost, and Quotes
richarde@kochcabinet.com

CLAIRE FOWLER - EXT. 2640
Delivery Schedule, Misc. Parts, Ship Log, Return Items, Missing Items, Backorder Schedule, Damages
claire@kochandco.com

TENNESSEE SHIPPING DEPARTMENT - PH: 423-235-4442

MYRON NAGURNEY - EXT. 5220 **423-393-9534**
Delivery Schedule
myron@kochtenninc.com

PRODUCTION SCHEDULE - PH: 785-369-3063

LAURIE OSTERHAUS - EXT. 2630 **785-369-3063**
laurieo@kochcabinet.com

RECEIVABLE ACCT - PH: 877-540-5624 FAX:785-336-2638

ANGIE LUEGER - EXT. 1440 **785-369-3013**
Credit, Payments
angie@kochandco.com

BONNIE RIDENOUR - EXT. 1150 **785-369-3016**
Cabinet Invoicing, Accounts Receivable
bonnier@kochandco.com

AFTER SALES SERVICE/WARRANTIES - PH: 877-540-5624

CARA BAKER - EXT. 2830
Warranty Claims Manager
cara@kochcabinet.com

MIKE WHITLEY - (689) 345-5908
After Sales Service/Warranty Assistance
mikew@kochcabinet.com

COMPANY MANAGEMENT - PH: 877-540-5624

JIM KOCH - PRESIDENT
No extension - use E-mail - jimk@kochandco.com

CRAIG HEIMAN - EXT. 2612 **785-336-0160**
General Manager - craig@kochcabinet.com

LARRY KUCKELMAN - EXT 1330
C.F.O., Accounts Receivable
larry@kochandco.com

TERMINOLOGY

1W	1 Wide door
2B	1 Pair of Butt Doors
4B	2 Pair of Butt Doors
8B	4 Pair of Butt Doors
A	Angle
AD	Apothecary Drawers
AF	Angled Filler
AG	Appliance Garage
AH	Adult Height (VANITY)
APRON	Vanity Apron Sink
B	Base
BA	Base Transition
BEADBBS	Beaded Base Back Panel
BAG	Butt Door Appliance Garage
BB	Bread Board
BBC	Bread Board Centered
BBS	Base Back Panel
BC	Base Blind Corner
BCC	Base With Center Breadboard
BCSF	Base Corner Sink Floor
BD	Drawer Base
BDK	Base Depth Knee Desk
BDS	Base with Drop Stile
BER	Base Easy Reach
BI	Built In
BK	Bookcase
BO	Base Oven
BM	Blumotion
BR	Range Base
BS	Base Sink
BSF	Base Sink Floor
BWC	Base Wine Cubbie
BWCRADLE	Base Wine Cradle
BWDWR	Base Warming Tray Cabinet
BWFF	Base Wine with Face Frame
BWR	Base Wine Rack
BWS	Base Window Seat
CC	Crisscross
CD	Center Drawer
CKP	Classic Keyboard Pullout
COR	Corner
CL	Classic
CLFMO	Clip Modified Full Overlay
CLSO	Clip Standard Overlay
CP	Chef Pantry
CR	Classic Rollout
DAG	Appliance Garage W/Doors
DC	Diagonal Corner Base
DCS	Diagonal Corner Sink
DD	Double Drawer
DIA	Diagonal Angle
DM	Door Material
DO	Desk Organizer
DR	Dovetail Rollout or Door
DS	Double Section
DW	Dishwasher
DWR	Drawer
EP	End Panel
ES	Extended Style
F	Filler
FO	Full Overlay
FFDC	Face Frame Door on Cabinet
FFL	Finished Fluted
FHD	Full Height Doors
FI	Finished Interior
FL	Fluted
FM	Flush Mount
FTK or FT	Flush Toe Kick
FINTK	Finished Toe Kick
FREP	Finished Refrigerator End
FUEP	Finished Utility End Panel
FUR	Furniture Base
HCS	Handicap Sink
HG	Hettich Guide
HM	Half Moon Shelf
HMFO	Hinge Mod Full Overlay
HSO	Hinge Standard Overlay
IB	Island Base
IE	Integrated End
IPC	Island Peninsula Corner
IV	Inverted
IW	Island Wall
IWC	Island Wall Corner
IWR	Inverted Wine Rack
KP	Keyboard Pullout
LC	Linen Closet
LCD	Linen Closet with Drawer
LD	Linen Closet-Angled Diagonal corner
LF	Linen Front
LH	Loose Hinge
Loose Toe	Loose Toe Kick
LS	Lazy Susan
LT	Loose Track
LOCKER	Locker Cabinet
LWT	Linen Walk Thru
MC	Medicine Cabinet
MTD	Metal Tray dividers
MW	Microwave
NBR	No Bottom Rail
NC	No Charge
ND	No Doors
NPWLS	No Pole Wood Lazy Susan
NBR	No Bottom Rail
NTK	No Toe Kick
OCD	Double Oven Cabinet
OCS	Oven Cabinet
ODS	Office Drop Stile
OF	Office
OFFB	Office File Base
OVLF	Overlay Filler
P	Pantry
PE	Per Edge
PS	Per Side
PRD	Plate Rack with Doors
PRND	Plate Rack No Doors
PWTF	Walk Thru Pantry Front
PWT	Walk Thru Pantry
RCS	Recessed Corner Sink
RDLS	Revolving Doors Lazy Susan
RHCC	Range Hood Capri Corbel
RHMC	Range Hood Mission Corbel
RO	Rollout
RREP	Raised Refrigerator End Panel
RSD	Raised
RTK or RT	Recessed Toe Kick
SAG	Single Door Appliance Garage
SC	Soft Close
SD	Spice Drawer
SO	Standard Overlay
SM	Sidemount
SP	Spice Pullout
SR	Spice Rack
STD	Standard
TAG	Tambour Appliance Garage
TD	Tub Drawer
TDS	Top Drawer split
TDS	Tall Drop Stile
TR	Trash Rollout
TT	Vanity Toilet Topper
TVMC	TriView Med Cab
U	Depth
UD	DTUMFE-Undermount Drawer
UF	Undermount File Drawer
UM	Undermount
V	V Angle
VALTK	Valance Toe Kick
VB	Vanity Base
VDB	Vanity Drawer Base
VDK	Vanity Depth Knee Desk
VR	Valance Rail
VSB	Vanity Sink Base
W	Wall
WAB	Wall W/Arched Bottom Rail
WBR	Wide Bottom Rail
WC	Wall Blind Corner
WCF	Wall Corner Filler
WCR	Wide Center Rail
WD	Diagonal Wall
WDO	Wall Desk Organizer
WDS	Wall Drop Stile
WER	Wall Easy Reach
WHM	Wood Half Moon Shelf
WLS	Wood Lazy Susan
WR	Wine Rack
WRCC	Wine Rack Criss Cross
WSD	Wood Silverware Divider
WTD	Wood Tray dividers
WTR	Wide Top Rail
WWC	Wall Wine Cubbie
WWFF	Wall Wine W/Face Frame
WWN	Wall Whatnot Shelf

CLASSIC SERIES



BASE CABINET

WALL CABINET



1. 3/4" HARDWOOD FACE FRAMES WITH GLUED AND POCKET SCREWED JOINTS.

2. 1/2" PARTICLE BOARD BACK WITH MAPLE PRINT INTERIOR, ELIMINATING THE NEED FOR HANG RAILS. CABINETS OVER 36" WIDE WILL HAVE SHELF HOLES IN THE BACK FOR ADDED SUPPORT.

3. 1/2" PARTICLE BOARD SIDES, TOPS AND BOTTOMS, WITH MAPLE PRINT INTERIOR AND EXTERIOR.

4. 3/4" PARTICLE BOARD SHELVING WITH MAPLE PRINT ON BOTH SIDES AND ONE EDGE. ALL SHELVES ARE ADJUSTABLE WITH BASE CABINETS HAVING 1/2 DEPTH SHELVES, SUPPORTED BY SHELF CLIPS.

5. DOORS WILL HAVE A 1/4" FLAT PANEL OR 9/16" RAISED OR REVERSED RAISED PANEL.
   PAINT GRADE-HD - STILES, RAILS & PANEL WILL BE HDF (HIGH DENSITY FIBERBOARD).
   PAINT GRADE-MAPLE - STILES & RAILS WILL BE MAPLE. THE PANEL WILL BE HDF.

6. BLUM SOFT CLOSE ONE PIECE ADJUSTABLE CONCEALED HINGES WITH LIFETIME WARRANTY.
   DOOR UPGRADE OPTIONS:
   1. BLUMOTION SOFT CLOSE DETACHABLE CLIP.

7. AVAILABLE OPTION: APPLIED 1/4" VENEERED SKINS.

8. STANDARD FINISH CONSISTS OF HAND WIPED STAIN, A COAT OF SELF SEALING CONVERSION VARNISH, & A TOP COAT OF CONVERSION VARNISH. FINISH THICKNESS APPROXIMATELY 7 MIL, WET.

9. 3/4" DRAWER FRONTS.
   PAINT GRADE-HD - DRAWER FRONT WILL BE HDF (HIGH DENSITY FIBERBOARD).
   PAINT GRADE-MAPLE - DRAWER FRONT WILL BE MAPLE.

10. 5/8" SOLID HARDWOOD DOVETAIL DRAWER WITH 3/4 EXTENSION SIDEMOUNT GUIDE. (DT-GSM)
    DRAWER UPGRADE OPTIONS:
    1. 5/8" SOLID HARDWOOD DOVETAIL DRAWER WITH SOFT CLOSE 7/8 EXTENSION UNDERMOUNT GUIDE. (DT-BSC 7/8)
    2. 5/8" SOLID HARDWOOD DOVETAIL DRAWER WITH BLUMOTION FULL EXTENSION UNDERMOUNT SOFT CLOSE DRAWER GUIDES. (DT-UMFE)

11. SELF ADJUSTING EPOXY COATED SIDE MOUNT DRAWER GUIDES. TRACK WEIGHT RATING OF 75 POUNDS.

12. COUNTERTOP CORNER STRETCHERS ARE MADE OF ENGINEERED WOOD.

DURING INSTALLATION IF SILICONE IS GOING TO BE USED WE RECOMMEND IT BE A "NEUTRAL CURE" SILICONE. SILICONE PRODUCTS THAT CONTAIN ACETIC ACID SHOULD NOT BE USED AS IT CAN HAVE A DISCOLORING EFFECT ON THE FINISH.

KCMA CERTIFIED
MEETS KCMA ESP STANDARDS
C.A.R.B. PHASE II COMPLIANT

IMPERIAL SERIES

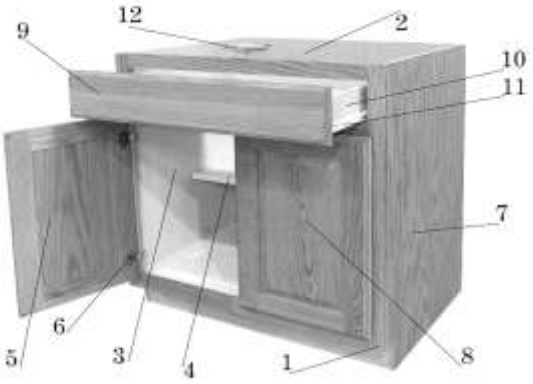

BASE CABINET

WALL CABINET



1. 3/4" HARDWOOD FACE FRAMES WITH GLUED AND POCKET SCREWED JOINTS.

2. 1/2" PLYWOOD WITH MAPLE PRINT INTERIOR, ELIMINATING THE NEED FOR HANG RAILS. CABINETS OVER 36" WIDE WILL HAVE SHELF HOLES IN THE BACK FOR ADDED SUPPORT.

3. 1/2" PLYWOOD SIDES, TOPS AND BOTTOMS, WITH MAPLE PRINT INTERIOR AND EXTERIOR.

4. 3/4" PLYWOOD SHELVING WITH MAPLE PRINT ON BOTH SIDES AND ONE EDGE. ALL SHELVES ARE ADJUSTABLE WITH BASE CABINETS HAVING 1/2 DEPTH SHELVES, SUPPORTED BY SHELF CLIPS.

5. DOORS WILL HAVE A 1/4" FLAT PANEL OR 9/16" RAISED OR REVERSED RAISED PANEL.
PAINT GRADE-HD - STILES, RAILS & PANEL WILL BE HDF (HIGH DENSITY FIBERBOARD).
PAINT GRADE-MAPLE - STILES & RAILS WILL BE MAPLE. THE PANEL WILL BE HDF.

6. BLUM SOFT CLOSE ONE PIECE ADJUSTABLE CONCEALED HINGES WITH LIFETIME WARRANTY.
DOOR UPGRADE OPTIONS:
1. BLUMOTION SOFT CLOSE DETACHABLE CLIP.

7. AVAILABLE OPTION: APPLIED 1/4" VENEERED SKINS.

8. STANDARD FINISH CONSISTS OF HAND WIPED STAIN, A COAT OF SELF SEALING CONVERSION VARNISH, & A TOP COAT OF CONVERSION VARNISH. FINISH THICKNESS APPROXIMATELY 7 MIL, WET.

9. 3/4" DRAWER FRONTS.
PAINT GRADE-HD - DRAWER FRONT WILL BE HDF (HIGH DENSITY FIBERBOARD).
PAINT GRADE-MAPLE - DRAWER FRONT WILL BE MAPLE.

10. 5/8" SOLID HARDWOOD DOVETAIL DRAWER WITH 3/4 EXTENSION SIDEMOUNT GUIDE. (DT-GSM)
DRAWER UPGRADE OPTIONS:
1. 5/8" SOLID HARDWOOD DOVETAIL DRAWER WITH SOFT CLOSE 7/8 EXTENSION UNDERMOUNT GUIDE. (DT-BSC 7/8)
2. 5/8" SOLID HARDWOOD DOVETAIL DRAWER WITH BLUMOTION FULL EXTENSION UNDERMOUNT SOFT CLOSE DRAWER GUIDES. (DT-UMFE)

11. SELF ADJUSTING EPOXY COATED SIDE MOUNT DRAWER GUIDES. TRACK WEIGHT RATING OF 75 POUNDS.

12. COUNTERTOP CORNER STRETCHERS ARE MADE OF ENGINEERED WOOD.

DURING INSTALLATION IF SILICONE IS GOING TO BE USED WE RECOMMEND IT BE A "NEUTRAL CURE" SILICONE. SILICONE PRODUCTS THAT CONTAIN ACETIC ACID SHOULD NOT BE USED AS IT CAN HAVE A DISCOLORING EFFECT ON THE FINISH.

KCMA CERTIFIED
MEETS KCMA ESP STANDARDS
C.A.R.B. PHASE II COMPLIANT

STANDARD OVERLAY

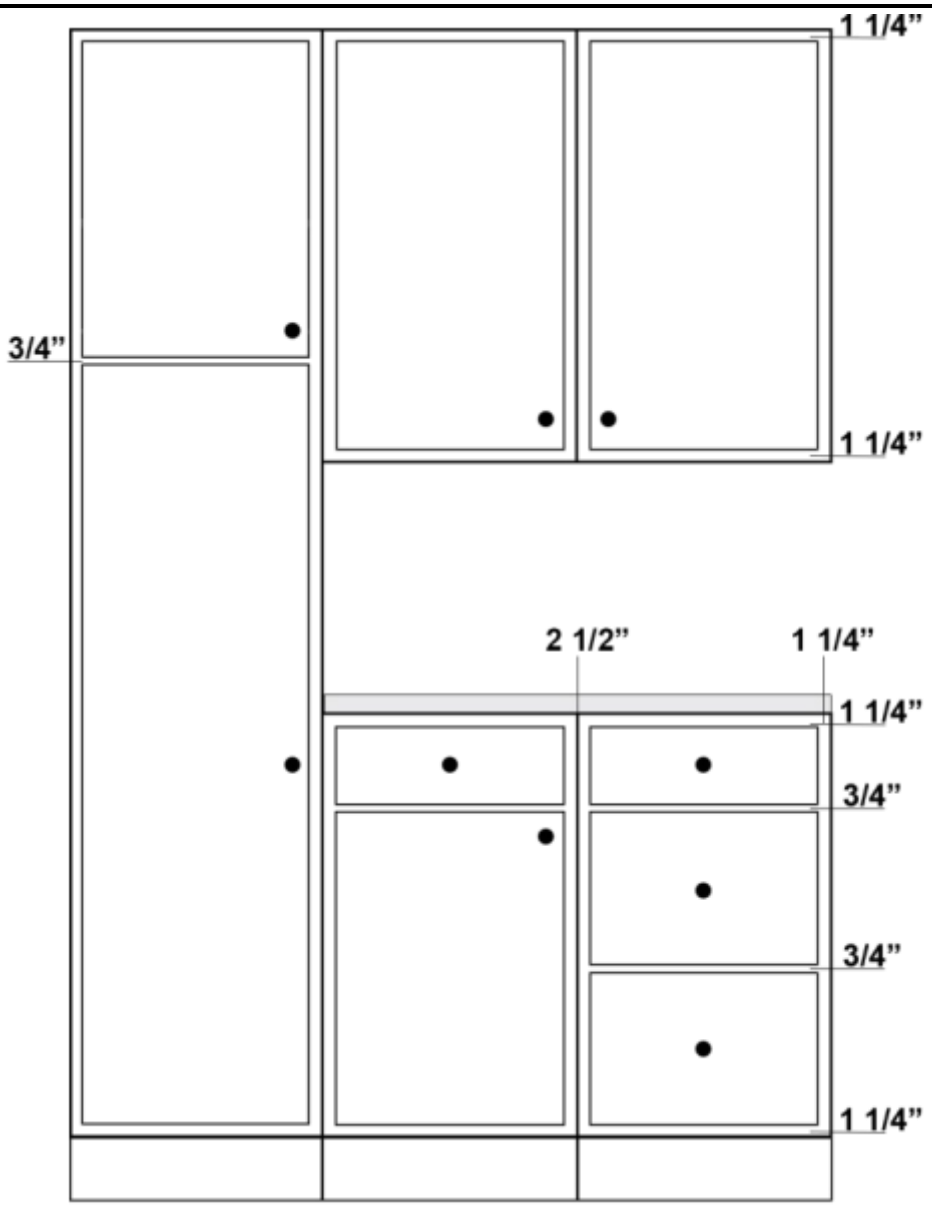

Vertical reveals between doors or drawers of connecting cabinets will be 2 1/2". Horizontal reveals between stacked drawers, between drawers and doors, and between stacked doors will be 3/4". Reveals at the top and bottom of walls, talls, bases, office, and vanities will be 1 1/4".

See page 18 for hinge information for both overlays.

MODIFIED FULL OVERLAY

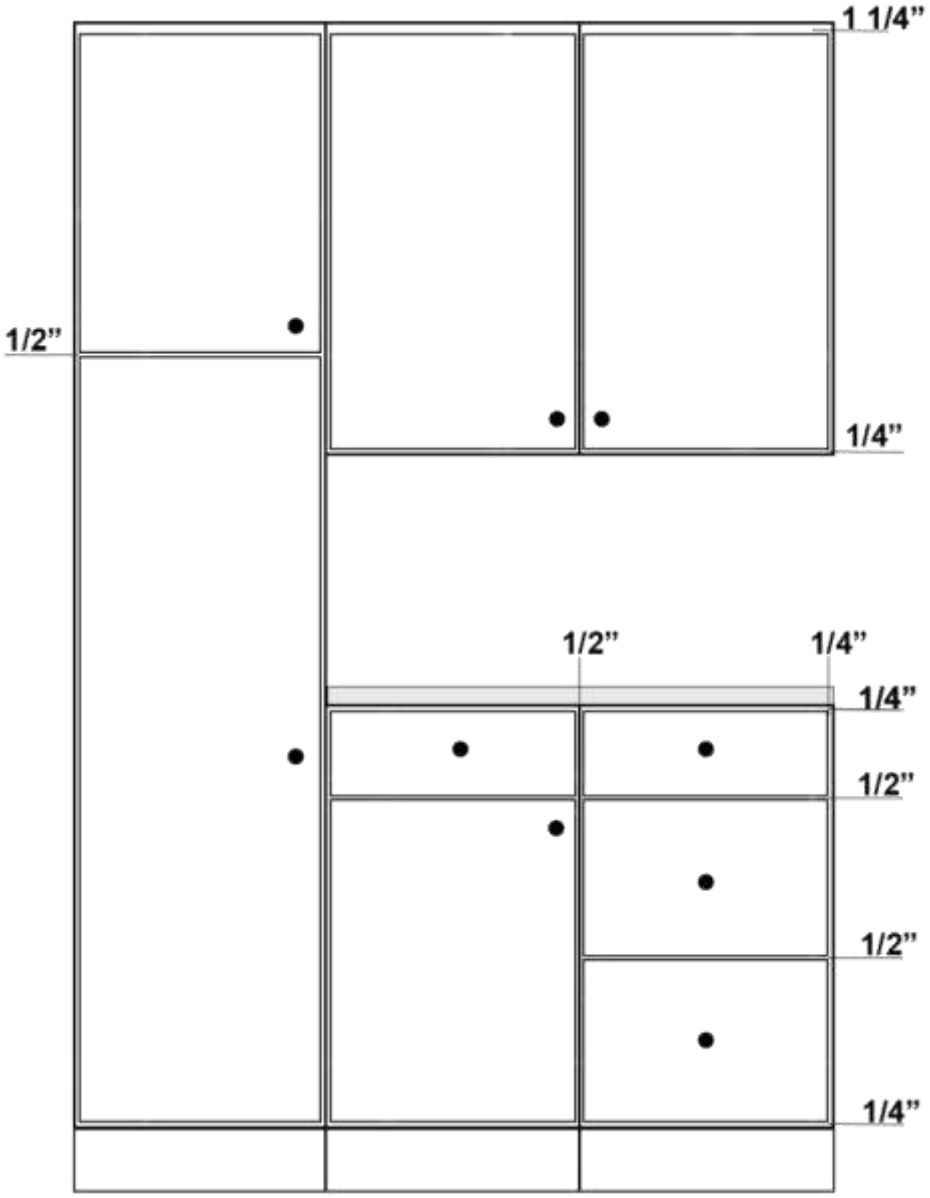

Vertical reveals between doors or drawers of connecting cabinets will be 1/2". Horizontal reveals between stacked drawers, between drawers and doors, and between stacked doors will be 1/2". Reveals at the top of walls and talls will be 1 1/4" and the bottom will be 1/4". Reveals at the top and bottom of bases, office, and vanities will be 1/4".

Wide stile or rail overlay will change reveal.

Blind base - door overlaps blind side 1/2".

Corner cabinet - 1" reveal on frame.

WOOD DESCRIPTIONS

BEECH

Beech may vary in color tones from light tan to reddish brown, creating some color variation when finished. Beech will also have some pin knots and sap streaks. Variations in color and graining of Beech are commonplace and Koch Cabinets may not be responsible for color or grain variations between a sample block and the complete order. Door Styles made with solid wood Beech panels are affected by humidity levels. Solid wood Beech panels will expand when exposed to high moisture areas and will shrink in dry climates. This will happen in products with a good paint or varnish finish. We suggest keeping humidity levels at 35-45% to help avoid panel movement. Doors made with engineered panels will have much less movement and we suggest using them in areas with high humidity or low humidity levels.

BIRCH

Birch is a smooth, even grained hardwood that is predominantly off-white with some red and brown variation giving it a calico appearance. Birch cabinets with a wiping stain will not be consistent in color. The ends of the stiles and the cross grain profile in the raised panel will be much darker than the rest of the door. In addition, the face frame, doors, and drawer fronts can vary in color. Birch will also have some pin knots. These are not considered a defect but desired by those wanting a "rustic" look.

CHERRY

Cherry Hardwood will darken in a short period of time. When ordering your door, understand it will be lighter in color than a sample block. Depending on the age of this color block will determine how much lighter. In addition, this sample does not display a true picture of the characteristics of the wood but only the basic color tone. Cherry has wide variations in grain and can contain some white areas that, even when stained, will be lighter than the basic red color. Any replacement parts will not match an existing kitchen but will gradually blend in over time. Pits and mineral streaks are a character of Cherry.

HICKORY

Hickory is sought after by those desiring unpredictable grain patterns and vast differences in color. The colors in Hickory can range from white to reddish or dark brown and will appear randomly giving it a calico appearance. Darker stains will tone these variations somewhat. Hickory is extremely hard with a high shock resistance. Mineral streaks appear naturally and are not considered defects.

MAPLE

Maple is a smooth, even grained hardwood that is predominantly off-white in color and more uniform than other hardwoods. Small mineral streaks appear naturally and are not considered defects. Maple doors with a wiping stain may not be consistent in color and may have some blotching. The ends of the stiles and the cross grain profile in the raised panel will be much darker than the rest of the door. In addition doors can vary in color. This is not considered a defect but desired by those wanting a “rustic” look.

PAINT GRADE-HD

Paint Grade-HD doors, 5 PC drawer fronts and slab drawer fronts are made from high density fiberboard. High density fiberboard provides a smooth finish and more stable joinery for paint.
Paint Grade-HD mullion doors, overlay frames and accessories may contain paint grade solid wood, high density fiberboard or a combination of both.

PAINT GRADE-MAPLE

Paint Grade-Maple doors and 5 PC drawer fronts will have Maple stiles and rails with a HDF panel. Slab drawer fronts will be solid Maple.
Paint Grade-Maple mullion doors, overlay frames and accessories may contain paint grade solid wood, high density fiberboard or a combination of both.

WHITE OAK

Sapwood is narrow, light-colored, nearly white and the heartwood is light to dark brown. Variations regarding grain patterns and color within the components of a complete order are considered a normal occurrence. The color and grain variations add to the beauty of Oak wood. Koch Cabinets will not be responsible for character marks or color variations between sample blocks and the complete order.

RIFT WHITE OAK

Rift White Oak is special cut oak wood that produces a straight grain appearance. There may be individual features and character marks that will appear that are natural to the wood grain. Koch Cabinets will not be responsible for character marks or color variations between sample blocks and the complete order.

WOOD DESCRIPTION

** RUSTIC WOODS

Rustic woods may contain natural sound defects and possess all inherent characteristics of the species. Minimal to no color or grain matching is done to preserve strong character. Some of the characteristics that may be represented are mineral streaks, pecks, burls, natural color variations, grain variations, and naturally occurring tight, open, and cracked knots. Open knots will be structurally “sound” and will not be seen through. The amount, size, and placement of natural characteristics will vary, and the consistency (or lack of) is not considered cause for replacement. Rustic woods may have less knots with more color variations and streaking. Paints are not recommended as they may reduce the appearance of the rustic characteristics. Dark stains may also reduce the appearance of the rustic character.

We do not guarantee that each piece will have rustic characteristics.

Due to the variations in wood, some panels, moldings, skins and other components may be clear.

** KNOTTY ALDER

Knotty Alder is a soft wood, known for its even texture. Its color can range from light red to reddish brown. Knotty Alder dents easily and having softwood and hardwood characteristics, will absorb excess stain creating dark areas but also absorb minimal stain creating light areas. This variance is not considered a defect. Knotty Alder is recommended when natural color and grain variations are desired, or acceptable, such as when used with medium to dark stained finishes. General characteristics of Knotty Alder are: generally pale pinkish-brown to reddish peach in color with a slight grain pattern.

** RUSTIC BEECH

Rustic Beech will vary in color tones from light tan to reddish brown, creating some color variation when finished. Beech will also have some pin knots and sap streaks. Variations in color and graining of Rustic Beech are commonplace and Koch Cabinets will not be responsible for color or grain variations between a sample block and the complete order. Door Styles made with solid wood Beech panels are affected by humidity levels. Solid wood Rustic Beech panels will expand when exposed to high moisture areas and will shrink in dry climates. This will happen in products with a good paint or varnish finish. We suggest keeping humidity levels at 35-45% to help avoid panel movement. Doors made with engineered panels will have much less movement and we suggest using them in areas with high humidity or low humidity levels.

** RUSTIC BIRCH

Rustic Birch is a smooth, even grained hardwood that is predominantly off-white with some red and brown variation giving it a calico appearance. Rustic Birch cabinets with a wiping stain will not be consistent in color. The ends of the stiles and the cross grain profile in the raised panel will be much darker than the rest of the door. In addition, the face frame, doors, and drawer fronts can be different colors. This is not considered a defect but desired by those wanting a "rustic" look.

** RUSTIC CHERRY

Rustic Cherry Hardwood will darken in a short period of time. When ordering your door, understand it will be lighter in color than a sample block. Depending on the age of this color block will determine how much lighter. In addition, this sample does not display a true picture of the characteristics of the wood but only the basic color tone. Rustic Cherry has wide variations in grain and can contain some white areas that, even when stained, will be lighter than the basic red color. Any replacement parts will not match an existing kitchen but will gradually blend in over time. Pits and mineral streaks are a character of Rustic Cherry.

** RUSTIC HICKORY

Rustic Hickory is sought after by those desiring unpredictable grain patterns and vast differences in color. The colors in Rustic Hickory can range from white to reddish or dark brown and will appear randomly giving it a calico appearance. Darker stains will tone these variations somewhat. Rustic Hickory is extremely hard with a high shock resistance. Mineral streaks appear naturally and are not considered defects.

** RUSTIC WHITE OAK

Sapwood is narrow, light-colored, nearly white and the heartwood is light to dark brown. Variations regarding grain patterns and color within the components of a complete order are considered a normal occurrence. The color and grain variations add to the beauty of Oak wood. Rustic White Oak may have some open and closed knots that are a character of Rustic White Oak.

NOTES OR ADDITIONS

POLICY AND PROCEDURES

KOCH CABINETS, A DIVISION OF KOCH AND CO., INC. CABINET WARRANTY

LIMITED LIFETIME WARRANTY

Koch & Co., Inc. warrants to the original consumer purchaser, as long as they own their home, that the cabinet box, shelves, and drawer box will be free from defects in materials and workmanship under normal use. This warranty is not transferable. No representative of Koch & Co., Inc. has the authority to modify this warranty.

Warranty Limitations

This limited Lifetime Warranty does not apply to:

1. Products that are installed in cabinets that are not manufactured by Koch & Co., Inc. Example: Rev-A-Shelf items, Century, Blum, Omega/Broan and Stanisci ventilation accessories, etc.
2. Cabinetry installed outdoors.
3. Cabinets that have been improperly installed, cleaned, or maintained.
4. Cabinets not installed in the United States.
5. Defects caused by misuse, abuse, negligence, alterations, environmental conditions, improper installation, normal wear and tear, commercial use, or improper storage and handling.
6. Labor for replacement or removal of cabinets.
7. Classic and Imperial cabinets should not be mixed with Express cabinets in a project. Doing so will void any warranty on color issues.
8. Against expansion or contraction occurring as a result of humidity levels being too high or too low. We recommend 35% to 45% relative humidity levels in your home. This warranty will be void if cabinets are stored or installed in environments that do not have properly controlled humidity levels.
9. Damage claims on cabinets stored for longer than 90 days are subject to review by Koch management due to environmental exposure and additional handling issues. Some conditions could void this warranty.
10. Warp: Koch & Co., Inc. has an allowance of 3/16" on any door or drawer front under 24" wide x 45" tall. Any cabinet whose warpage exceeds 3/16" and can not be corrected by hinge adjustment will be replaced by Koch & Co., Inc. after it has been acclimated for 1 year. If doors are removed during installation pay close attention that they are reinstalled on the same cabinet.
11. Any door over 42" tall, made as one panel (per customer request) is excluded from this warranty.
12. Finish issues on unfinished cabinets.
13. Unfinished cabinets that are not finished within two weeks of delivery date.

Warranty Disclaimers

1. Wood characteristics that are inherently associated with a wood species. Each wood specie exhibits its own distinctive pattern and characteristics which adds to its natural beauty. Grain variances, mineral streaks, worm holes and knots are not considered defects.
   There is not a minimum or maximum amount of characteristics and variances are not considered defects.
2. Color variations. This warranty does not cover the natural aging and darkening of the wood color, nor does it apply to the inherent growth characteristics of the wood. As with other natural materials, wood is affected by environmental factors such as natural and artificial lighting. Darkening or mellowing of the wood can be expected and is a natural process of wood.
3. From time to time, we will change design, specifications, and materials, as conditions require and improvements are developed,but we have no obligation to incorporate such changes in products we previously manufactured.

Warranty Performance

Koch & Co., Inc. may elect to repair or replace any Koch Cabinet product covered by our warranty. Should defects in material or workmanship exist during this warranty, Koch & Co., Inc. will elect at its discretion to either repair or replace the defective material or component, excluding labor costs. This warranty covers only parts and materials supplied by Koch & Co., Inc., and does not cover costs for removal or installation of counter tops, plumbing fixtures, appliances or related materials, or labor costs. Natural and environmental factors will affect cabinet products over time: therefore, Koch & Co., Inc. cannot be responsible for replacement products that may not exactly color-match installed product.

Some states do not allow exclusions or limitations of incidental or consequential damages, so the above limitations or exclusions may not apply. This warranty gives you specific legal rights, and you may also have other rights. This warranty is in lieu of all other warranties expressed or implied.

KOCH POLICY AND PROCEDURES

ORDERS: Please send orders via Cab Connect. Be sure to include oven cutouts and specs on special cabinets. Drawings of special cabinets and oven cabinets will be e-mailed with confirmations for your approval. Please approve and send back (orders@kochcabinet.com) ASAP to avoid delays in your order. We will not continue processing until approvals are received.

Orders received after 2:00 pm will be logged in the next business day. We do not accept orders over the phone.

CONFIRMATION: You will receive a typed confirmation of your order within 24 - 48 hours. Please look these over carefully and let us know of any changes or corrections. Please send changes to orders@kochcabinet.com. **No changes are taken over the phone.**
If you do not receive a confirmation within 24 to 48 hours, please call and make sure that we received your e-mail. We have no way of knowing if we did not receive an e-mail you sent, if it did not transmit properly.

CHANGES ON ORDERS: Changes can be made within 24 hours from the time you receive confirmation. Changes are only accepted by emailing orders@kochcabinet.com. After 24 hours, no changes are allowed. **No changes are allowed on rush orders, odds orders, or loose door orders.**

SHIP LOG: A ship log will be emailed to you on a weekly basis. This log will give you an estimated ship date on cabinet orders that we have received.

SHIPPING: Any questions about shipping, truck schedules, etc. need to be directed to the shipping department at 866-739-5624.

RUSH POLICY AND JOB COMPLETION EXCEPTIONS:
1. Rush Orders and Job Completions cannot be combined in any way to order cabinets for the same job.
2. Having multiples of accessories, and/or items such as end panels, wood tops, floating shelves, etc. will likely disqualify orders from Rush or Job Completion status.
3. Classic Rush or Job Completion orders used to complete any orders of the Express Series will be reviewed. If they contain custom or large quantities of accessories, the order may be delayed.

RUSH POLICY: Rush orders will have a $50 per box charge. There is a limit of 3 cabinets per rush order. **Orders over 3 boxes WILL NOT be considered for our rush program.** Custom cabinets, finished interiors, or angled cabinets will not be rushed. Not available on warranty or damaged cabinets.

Rush orders will be ready to ship in approximately ten working days and will be shipped on the first available truck. Shipping date will depend on your truck schedule. If you decide to ship FED-EX or LTL those charges will apply. These charges can vary in price, but will exceed $125 depending on location of delivery.

No changes are allowed on rush orders after they have been confirmed. Work is started on the order as soon as it has been confirmed so that we can deliver it to you on time. Once the work has started it can not be stopped.

JOB COMPLETION POLICY: Job Completion orders will have a $35 per box charge.There is a limit of 5 cabinets per job completion order. Any order over five boxes WILL NOT be considered for our job completion program. Multiple orders of 5 cabinets for one job will not be accepted. Custom cabinets, or angled cabinets will not be eligible for job completion. This does not apply to any warranty or damaged cabinets.

Job Completion orders will be ready to ship in approximately 15 working days. They will be shipped on the first available truck. Shipping date will depend on your truck schedule. If you decide to ship FED-EX or LTL those charges will apply. These charges can vary in price, but will exceed $125 depending on location of delivery.

No changes are allowed on job completion orders after they have been confirmed. Work is started on the order as soon as it has been confirmed so that we can deliver it to you on time. Once the work has started it can not be stopped.

IMPORTANT NOTE: Parts known as 'odds' and doors are not eligible for our Rush programs, nor JCO program. There are limitations depending on availability as we do not stock any completed materials. The good news is that many parts and doors do not take the full lead time. Be sure to separate them to a parts order.

If a job completion or a rush cabinet is needed, please contact Laurie Osterhaus at 785-369-3063.

DEALER RESPONSIBILITY

CAREFULLY INSPECT ALL CABINETS AND PRODUCTS UPON DELIVERY AND HAVE PERSONNEL THERE TO UNLOAD THE TRUCK. ANY DAMAGES OR SHORTAGES MUST BE NOTED ON THE SIGNED DELIVERY RECEIPT. DAMAGES OR SHORTAGES NOT WRITTEN ON THE SIGNED DELIVERY RECEIPT MAY NOT BE REPLACED. IF AN ITEM IS TO BE REPLACED THE DEALER MUST SEND IN THE WARRANTY FORM AND PICTURES OF THE DAMAGE.

DEALER WILL DO TOUCH-UP OF ANY MINOR DAMAGE THAT MIGHT HAVE OCCURRED IN SHIPPING AS WELL AS FINAL DOOR AND DRAWER ADJUSTMENTS. LABOR EXPENSES ARE THE RESPONSIBILITY OF THE DEALER IN THE EXECUTION OF WARRANTY ITEMS.

IF THERE IS AN ISSUE AFTER THE DEALER HAS DELIVERED CABINETS TO A JOBSITE, THE DEALER (OR A DEALER REPRESENTATIVE) WILL VISIT THE JOBSITE. THEY WILL MEET WITH THE CUSTOMER TO DETERMINE A SOLUTION THAT WILL SATISFY THE CUSTOMER. IF A PRODUCT NEEDS TO BE SERVICED ON THE JOBSITE, THE DEALER (OR A REPRESENTATIVE OF THE DEALER) MUST BE PRESENT WHEN THE WORK IS STARTED SO THAT EVERYONE HAS THE SAME UNDERSTANDING OF WHAT NEEDS TO BE DONE.

WHEN THE WORK IS COMPLETED A REPRESENTITIVE FROM THE DEALER MUST BE PRESENT TO INSURE THAT THE WORK PERFORMED HAS MET THE CUSTOMERS SATISFACTION.

WARRANTY AUTHORIZATION

WARRANTY REPORTS MUST BE SUBMITTED THROUGH CAB CONNECT.

KOCH & COMPANY RESERVES THE RIGHT TO APPROVE FIELD REPAIR. BEFORE REPAIR IS STARTED YOU MUST RECEIVE ADVANCED AUTHORIZATION FROM KOCH & COMPANY IF COMPENSATION IS EXPECTED.

IT IS IMPORTANT TO INCLUDE A PICTURE OF THE DAMAGE. THE PICTURE CAN BE SUBMITTED IN CAB CONNECT IF YOU SUBMIT YOUR WARRANTY REPORT THERE.

WARRANTY REPORTS MUST BE SUBMITTED THROUGH CAB CONNECT.

CABINETS OR PARTS THAT ARE DEFECTIVE WILL BE REPLACED ON A RUSH BASIS. KOCH & COMPANY RESERVES THE RIGHT TO ASK FOR THE RETURN OF DEFECTIVE ITEMS.

SHIPPING

ALL JOB SITE DELIVERIES MUST BE PRE-APPROVED, IN WRITING BY SHIPPING DEPARTMENT

KOCH AND COMPANY REQUIRES DEALERS TO HAVE A WAREHOUSE OR A DELIVERY SERVICE THAT WE CAN DELIVER TO.

SHIPPING DEPARTMENT PHONE: 866-739-5624

KOCH & COMPANY WILL NOT DELIVER TO ANY LOCATION THAT DOES NOT HAVE A DEALER (OR AN AUTHORIZED REPRESENTATIVE OF THE DEALER) TO INSPECT AND SIGN FOR CABINETS

DEALER LOCATION DELIVERY IS A SERVICE THAT REQUIRES DEALERS TO BE RESPONSIBLE FOR THE FOLLOWING:

1. DEALER IS TO PROVIDE THE ASSISTANCE OF AT LEAST TWO PEOPLE TO UNLOAD THE TRUCK.
2. A REPRESENTITIVE OF THE DEALER MUST INSPECT THE CABINETS AS THEY ARE UNLOADED AND SIGN THE PACKING SLIP. ANY DAMAGE OR MISSING ITEMS MUST BE NOTED ON THE PACKING SLIP.
3. MAKING SURE THE DETAILED MAP SENT HAS A ROUTE THAT IS ACCESSABLE FOR THE TRUCK. THIS INCLUDES MAKING SURE OF BRIDGE CLEARANCE, WEIGHT RESTRICTIONS FOR BRIDGES OR ROADS, AND THAT THERE IS NOT ROAD CONSTRUCTION THAT WILL HINDER THE DELIVERY OF CABINETS.

IF ANY CONDITION, AT THE DISCRETION OF THE DRIVER, IS UNSAFE AND THE CABINETS CAN NOT BE DELIVERED, THEY WILL BE RETURNED TO THE FACTORY. DOUBLE FREIGHT CHARGES WILL BE APPLIED AND THE SCHEDULED RE-SHIP DATE WILL BE BASED ON THE TRUCK SPACE AVAILABLE.

THERE WILL BE A MINIMUM $200 RE-ROUTING CHARGE FOR ALL ORDERS WHICH HAVE THIER DESTINATION CHANGED BY THE DEALER AFTER THE TRUCK IS LOADED OR IN TRANSIT.

THERE WILL BE A MINIMUM CHARGE OF $200 IF THE TRUCK HAS TO SIT FOR MORE THAN AN HOUR PAST THE SCHEDULED DELIVERY TIME WITHOUT SOMEONE STARTING TO UNLOAD IT.

KOCH POLICY AND PROCEDURES

INTERIORS: The interiors of the Koch Cabinets are surfaced with a Maple grained print that resists most stains, scuffs, and mars.

CLEANING: Koch hardwood exteriors have a high quality finish on the wood that brings out its full beauty. We recommend cleaning the interior and exterior of your cabinets once a month with a clean damp sponge or cloth. If a spill occurs, it is important to clean up the spill and dry the surface right away. A spill left unattended will soak through the Maple print and cause damage. We do not recommend using paper towels because of their abrasiveness. To remove food residue or grease, use clean suds with a mild soap and water mixture. Do not use cleaners that have any abrasive additive, bleach or ammonia. These cleaners will cause damage to your cabinet finish. Dishcloths used for other cleaning should never be used as they could contain remnants of harsh chemicals or grease. Following cleaning, wipe all excess moisture off the cabinet fronts and door backs.

CAUTION: The most common form of damage done to cabinetry during normal maintenance is over scrubbing of the finishes, especially the edge profiles.

Excess moisture can damage any cabinet finish. Areas near the sink, dishwasher, range, oven, and baseboards are the most susceptible. Keep these areas dry.

Koch Cabinets have a high quality varnish finish and waxing is not necessary. Furniture polish may be used if waxing is preferred. Make sure to wipe off any excess polish to avoid build-up.

COLOR VARIANCE

Colors of all products change as they age. Various wood species will react in different ways depending on their exposure to the sun as well as the environment they are located in. For instance Cherry darkens with age and becomes more red, while White, and Ivory will have a tendency to acquire a slightly more amber coloring. Colored paints and clears may become slightly dull. We use high quality coatings and woods to diminish these reactions and proper care and conditions in the home will also be beneficial. If replacement parts or additional cabinetry is needed, more than a year after original purchase, a sample stain block from the original job should be sent in. It will NEVER be possible to perfectly match new cherry with old.

STAIN BLOCK AND SAMPLE DOOR EXPIRATION

A sample block will not show the full range of color and grain variations. We recommend you view a door sample or a full cabinet display before making your final selection. Koch Cabinets will not replace or refund cabinets because of variations in color or wood grain from a sample block. All stain blocks and sample doors have a date on them. It is our recommendation that they be replaced when that date is more than 4 years old. Because of the fact that Cherry darkens at a much quicker rate we recommend it be replaced after 6 months.

FURNITURE FINISH

All finishes are glossier when freshly finished. The gloss level will tone down after approximately 6 months, depending on the environmental exposure.

CABINET DOOR BACKS

Door backs will not be finished to the same level of artistic detail as the front. They will have the same blending color and durability as the front of the door. Please have door samples for your customers to view.

STACKED CABINETS

When stacking two cabinets together we want you to be aware they may not be exactly the same width, and that the two rails that join them together might not be a perfect fit. When working with wood products you can expect variances.
The ideal options for having stacked cabinets are:

1. We are a semi-custom builder, therefore we can take two cabinets and build them in one cabinet. This will cost more than two separate cabinets but will eliminate any differences between the two cabinets.
2. We have a section in the price book that has a complete line of double sectioned cabinets.

Between these two options, every cabinet need should be covered. If two separate cabinets are used for a "stacking" setup and if there are any issues with the fit, it will not be considered a defect and will not be reason for replacement.

KOCH POLICY AND PROCEDURES

Effects of Moisture in Cabinets

Any solid wood or wood components will expand or contract with changing moisture and climate conditions. All wood is hygroscopic, meaning that when exposed to air, it will release or pick up moisture until it is in equilibrium with the humidity and temperature of the climate.

Humid Climates

Wood products located in humid climates are especially susceptible to expansion. As humidity levels increase, wood products will expand due to extra moisture in the air.

Dry Climates

In low humidity conditions, wood will release moisture and shrink or contract in size. In a dry climate, (or in a home that does not have a humidifier in the winter months) wood will shrink, exposing gaps at the joints where wood is trying to contract. This may result in the appearance of an unfinished line along the center panel. Koch does not consider this a defect and will not replace doors due to this situation.

As wood expands or contracts, due to moisture content, it does not shrink or swell equally in all directions. Please note that just because wood is finished with a stain and topcoat, it is not immune to moisture. Cabinets will still take in moisture through contact with liquid or absorption from the air.

Seasonal temperatures and humidity changes (or situations such as higher than normal rain falls), can increase the calls dealers receive about the effects of moisture in cabinets. Teaching homeowners to monitor and control the levels of humidity can greatly reduce the occurrence of moisture related problems.

Measures that can be taken to Prevent Humidity Problems

Air conditioning, dehumidifiers, and humidifiers can help maintain satisfactory levels of moisture in a home. Using a hygrometer will make it easy to check the humidity level; they can be purchased at a hardware store. We recommend a range between 35% and 45% humidity.

*During storage be aware that an acceptable level of moisture must be maintained, and try to keep the room temperature between 60 and 90 degrees. When new cabinetry has been stored they should be allowed to stand, in the home where they will be installed, for a period of time to acclimate to the surrounding environment.

*Density of wood affects how much, or how little, wood expands or contracts. Some door styles may be better suited for homes that are located in areas that are more susceptible to humidity issues. Vacation homes should maintain climate control when not in use. In an uncontrolled environment, wood is a dimensionally unstable material.

NOTE : Koch and Company's warranty is written with the expectation that cabinets will be stored and installed in a climate controlled environment. Warranty will be voided if cabinets are stored or installed in buildings with extreme temperatures or humidity levels.

We want customers to enjoy their cabinets and working with them to avoid extreme levels of humidity will keep cabinets looking beautiful for many years.

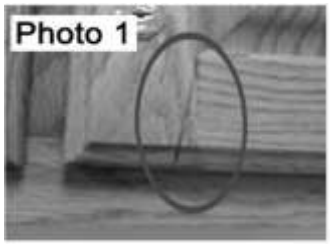

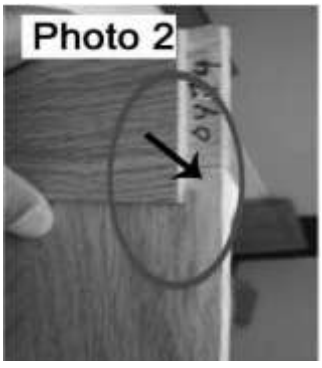

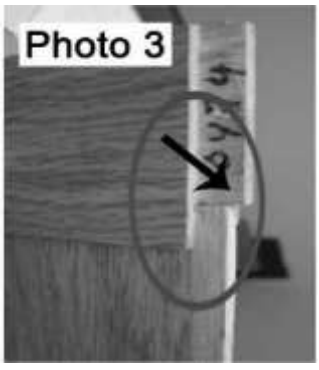

Photo 1: Shows that the stile cracked due to panel movement in the door.

Photo 2: Shows that the panel had expanded in width about 3/16" due to high humidity in the room the cabinet was installed in.

Photo 3: Shows that the panel lip contracted about 3/16", to the correct size, after the humidity was regulated to the proper level.

HARDWARE INSTRUCTIONS

DOOR ADJUSTMENT DIRECTIONS FOR BLUMOTION HINGE

Three-dimensional adjustment

Side adjustment

Rotate the front cam screw to increase or decrease door overlay (+/- 1/16").

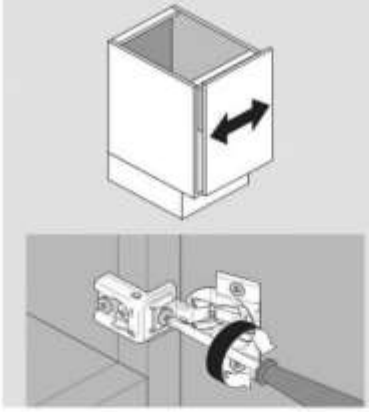

Height adjustment

Loosen installation screws to adjust door position (+/- 1/8"), then retighten.

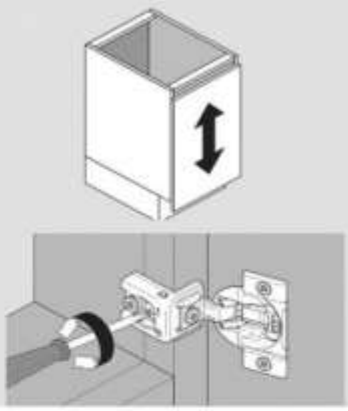

Depth adjustment

Rotate the rear cam screw to adjust door gap (+ 3/32", - 1/32").

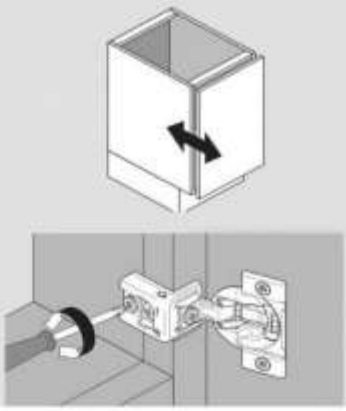

BLUMOTION DEACTIVATION

Switch on the hinge cup

For small or light doors, the BLUMOTION can be deactivated on one of the hinges. COMPACT BLUMOTION comes in the activated position, marked with a "I". The deactivated position is marked with a "0".

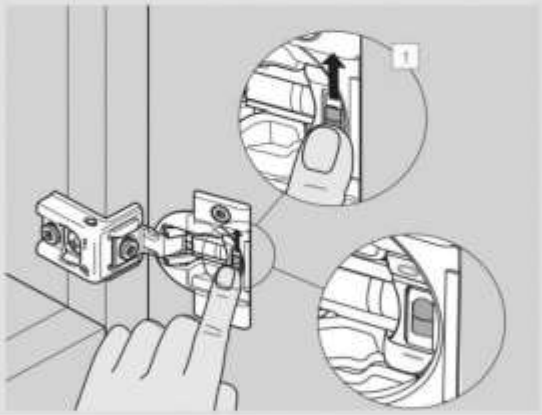

Door must be closed once for the deactivation to be complete. To reactivate, move switch back to the original position "I".

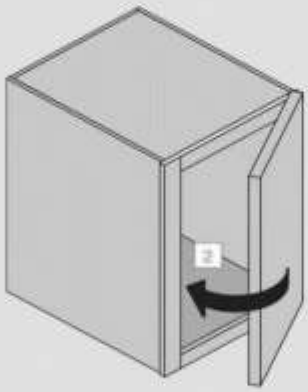

COMPACT BLUMOTION ANGLE RESTRICION CLIP - ASSEMBLY INSTRUCTIONS

Step 1 — Remove door

Loosen and remove installation screws.

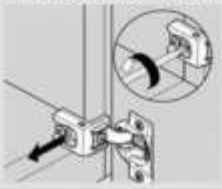

Step 2 — Rotate hinge arm

Rotate hinge arm to closed position.

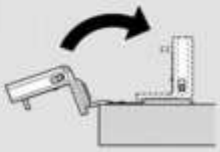

Step 3 — Insert angle restriction clip

Insert angle restriction clip (38C315B3) into base of hinge arm and secure.

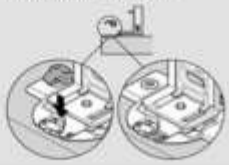

Step 4 — Rotate hinge arm

Rotate hinge arm to open position.

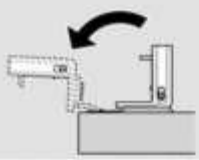

Step 5 — Reattach door

Align door and reattach by inserting and tightening installation screws.



HARDWARE INSTRUCTIONS

TANDEM plus BLUMOTION — 563H/563. installation instructions

blum

Height adjustment	Tilt adjustment	Depth adjustment on runner
1 Press up on adjustment tab 2 Push towards back of drawer	Rotate the tilt adjustment lever on the rear of each runner to lift the back of the drawer and tilt the top of the drawer front forward	TANDEM 563 runners feature elongated holes that allow ±**4.5** (3/16") depth adjustment
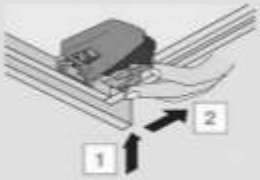	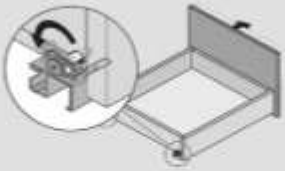	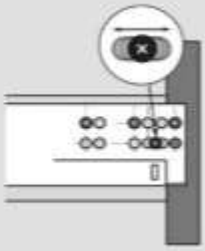
Maximum **3** (1/8") rise of drawer front (tool-free)	Maximum **5** (3/16") rise of drawer back (tool-free)	

NOTE: Height and tilt adjustments available with all combinations of locking devices and runners

How to clip and unclip the Blumotion Soft Close Detachable Clip Hinge: Scan the QR code below to learn more!

Do you need to adjust your Blumotion Soft Close Detachable Clip Hinge? Scan the QR code below to learn more!

SPECIALTY FINISHES

ACCENT GLAZING

Accent glazing is a unique finish to cabinetry that adds a beautifully artistic touch. Hand applied by our craftsmen, to give depth and accentuate the molding used to create an antique appearance.

The amount of accent to the natural variation of the wood will depend on the door style, construction wood species, and glaze color. Fine grained woods such as Maple, Cherry, and Birch will have a delicate effect.

The more decorative the molding, the more defined it will be as the glazing will “hang-up” in the recesses of the molding.

Since glazing is hand applied, each door will have its own personality which adds a more unique, one of a kind addition to your home.

HIGHLIGHTS

Highlights are only available on painted cabinets and is applied to the painted door before the topcoat of varnish.

Highlights are hand applied, each door will have its own personality which adds a more unique, one of a kind addition to your home.

DISTRESSING

Cracks, dents, nicks, and wormholes give the appearance of aged wood.

RUB THROUGH

Koch Rub Thru finish is done by hand in our factory. There is no consistency to where the rub thru is going to be on your cabinet doors and drawer fronts. Rub Thru technique will vary from piece to piece in your cabinets.This variation will not be considered a defect and will not be reason for replacement. Rub Thru will expose natural wood color and will be random in stiles, rails, and in raised panels.

SPECIALTY FINISHES

DYE STAINS

Chestnut, Frontier, and Mocha are dye stains. Cabinets receive a coat of dye, a coat of stain, one coat of conversion varnish as a sealer, and one topcoat of conversion varnish. This stain choice is prone to color variations, resulting in light and dark sections in the cabinetry. Koch Cabinets uses hand wiping stains that bring out the natural characteristic of wood, which will vary depending on the species.

WIPING STAINS

Almond, Briarwood, Brown Sepia, Driftwood, Pecan, Russet, Sienna, Sand, Stone and Wheat are wiping stains. Cabinets receive a coat of stain, one coat of conversion varnish as a sealer, and one topcoat of conversion varnish. Driftwood, and Stone stains are prone to color variations, resulting in light and dark sections in the cabinetry. Koch Cabinets uses hand wiping stains that bring out the natural characteristic of wood, which will vary depending on the species. This variation is a feature of Stone and Driftwood stain and will not be a reason for replacement.

SPRAY NO WIPE STAINS

Cashew, Hazel, Nutmeg, Pebble and Rye are spray no wipe stains. Cabinets receive a coat of non wiping stain, one coat of self sealing conversion varnish, and a top coat of conversion varnish.

ANTIQUE STAINS

Capri Drift, Dusk Drift, Fog Drift, and White Drift are Antique stains. The Antique stain finish is a paint and stain combination that will give you a weathered appearance. The stain is applied over paint then wiped off by hand, creating lighter and darker areas on the door. The stain technique will give each cabinet its own unique look, with no two doors being the same. This stain is prone to color variations, resulting in light and dark sections in the cabinetry. Koch Cabinets uses hand wiping stains that bring out the natural characteristic of wood, which will vary depending on the species. This variation is a feature of Antique stain is not considered a defect and will not be reason for replacement.

PAINTS

On wood products, movement is typical due to changes in the climate conditions. This will cause the hairline cracks at the stiles, rails, and joints that you will see in a painted finish. Panel shrinkage may also occur in the door panel of your cabinetry. Over time there may be a slight color change in this finish due to exposure to natural and artificial light. The color black also brings out the natural flaws in the wood that is hidden by other colors. These items listed above are natural occurrences in the wood and will not be considered a defect or reason for replacement by Koch Cabinets.

FINISHING PROCESS

1. Doors and drawer fronts are sanded through a wide belt sander followed by an orbital sander.
2. Next, hand sanded and inspected.
3. Then, are run through a brush sander for dust removal and denibbing to prepare for staining.
4. Stain is applied to both sides.
5. Doors and fronts have a seal coat applied and are oven cured one side at a time with a self-sealing conversion varnish.
6. Then, are hand seal sanded and brushed clean of sealer dust.
7. Finally, have a top coat of conversion varnish applied and are oven cured one side at a time.

SPECIALTY FINISHES

ITEM DESCRIPTIONS	HIGHLIGHT	ACCENT GLAZE	RUB THRU	DISTRESS
FRAME	NO	NO	NO	NO
DOORS	YES	YES	YES	YES
WINE RACK	YES	YES	YES	NO
PLATE RACK	NO	NO	NO	NO
TAMBOURS	NO	NO	NO	NO
RAISED END PANELS	YES	YES	YES	YES
FEET, CORBELS, LEGS	YES	YES	YES	YES
FLUTED FILLERS	YES	YES	YES	NO
PLAIN FILLERS	NO	NO	NO	NO
PANELED VALANCES	YES	YES	YES	YES
VALANCE & ARCHED VALANCE	YES	YES	YES	YES
WINDOW VALANCE	YES	YES	YES	YES
PLAIN RANGE HOODS	YES	YES	YES	YES
PANELED HOODS	YES	YES	YES	YES
OVERLAY FILLERS	YES	YES	YES	YES
BEADED PANELS	YES	YES	YES	NO
WOOD TOP	NO	NO	NO	NO
FLOATING SHELF	NO	NO	YES	NO
FURNITURE BASE	YES	YES	YES	YES
IMPERIAL CROWN	YES	YES	YES	YES
COVE CROWN	YES	YES	YES	YES
LARGE COVE CROWN	YES	YES	YES	YES
CROWN	YES	YES	YES	YES
SHAKER CROWN	NO	NO	YES	YES
COUNTEREDGE	NO	NO	YES	YES
LIGHTRAIL	YES	YES	YES	YES
LIGHTRAIL SHAKER	NO	NO	YES	YES
CAB CROWN	YES	YES	YES	YES
OUTCORN	YES	YES	YES	YES
OUTCORN 22	NO	NO	YES	YES
INCORN	NO	NO	NO	NO
CAB DOOR MOLDING	YES	YES	NO	NO
SHOE	NO	NO	NO	NO
SCRIBE	NO	NO	NO	NO
BATTEN	NO	NO	NO	NO
MID SHAKER CROWN	NO	NO	YES	YES
OUTCORN SHAKER	NO	NO	YES	YES

BLACK ACCENT & CHOCOLATE ACCENT	N/A ON PAINTS
UMBER HIGHLIGHT	AVAILABLE ON CAPRI, DUSK, IVORY, WHITE, TAUPE, FOG, FROST AND OYSTER
EBONY HIGHLIGHT & SMOKE HIGHLIGHT	AVAILABLE ON ACCESSIBLE BEIGE, CHARCOAL BLUE, FROST, FOG, IVORY, OYSTER, SHOJI WHITE, TAUPE AND WHITE

NOTES OR ADDITIONS

NOTES OR ADDITIONS

STILE AND RAIL DOORS

NOT INCLUDING MITER DOORS

Doors taller than 42" will be a two-panel door with a center splitter.





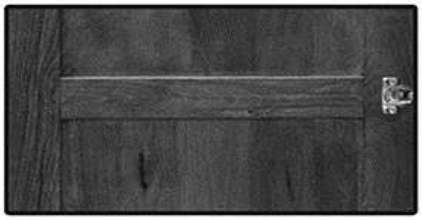

MITER DOORS

Miter Doors taller than 46" are going to be two doors attached together with brackets on the back side.

This will function as one door.







ANY STILE AND RAIL DOOR OVER 24" WIDE WILL BE CONVERTED TO A TWO PANEL DOOR

ANY MITER DOOR OVER 24" WIDE WILL BE CONVERTED TO TWO DOORS WIDE

STILE AND RAIL CONSTRUCTION



MITER DOOR CONSTRUCTION

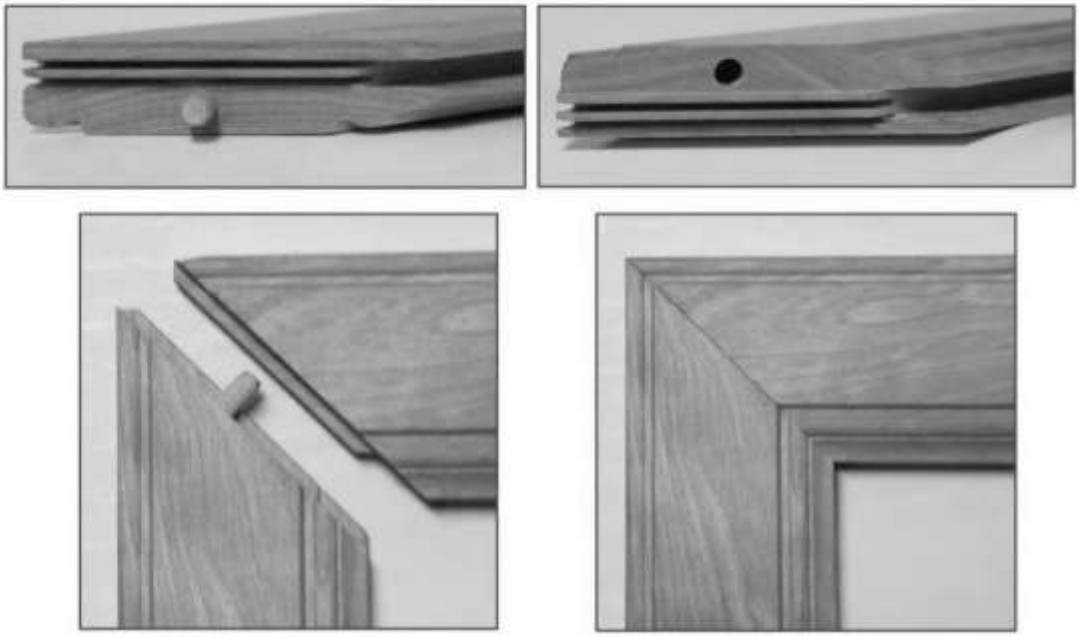

MITER 5 PIECE DRAWER FRONT BRACKET

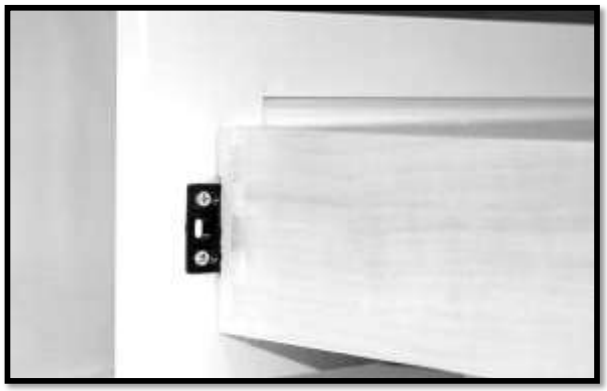

ASPEN15 DOOR STYLE

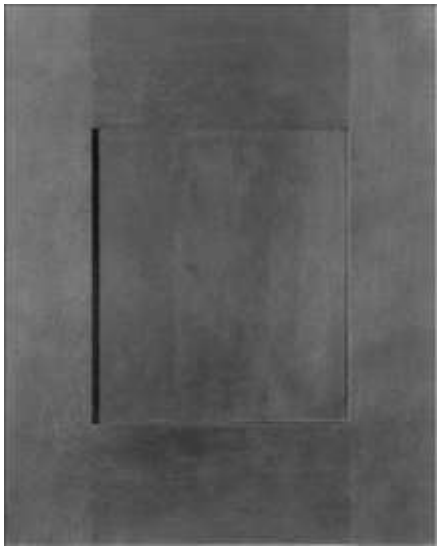

USE PRICE COLUMN "G"

MOD FULL OVERLAY ONLY
FULL OVERLAY UPCHARGE APPLIES
MORE INFORMATION ON PAGE 11

AVAILABLE IN MOLDED
3/8" SOLID REVERSE RAISED PANEL
2 1/2" SHAKER STILES & 3 1/2" SHAKER RAILS

AVAILABLE WITH 5 PC DRAWER FRONTS
3/8" SOLID REVERSE RAISED PANEL
2 1/2" STILES & 1 1/2" OR 2 1/2" RAILS

IF DRAWER HEIGHT IS 8 1/4", OR MORE, THE TOP AND BOTTOM RAILS WILL BE 2 1/2" INSTEAD OF 1 1/2"

DOORS TALLER THAN 42" ARE GOING TO BE TWO PANELS WITH A CENTER SPLITTER IN THE MIDDLE - SEE PAGE 27



STAIN OPTIONS	KNOTTY ALDER	BEECH	RUSTIC BEECH	BIRCH	RUSTIC BIRCH	CHERRY	DISTRESS RU-CHERRY	HICKORY	RUSTIC HICKORY	MAPLE	*PAINT GRADE - HD	*PAINT GRADE - MAPLE		
NATURAL	D	D	D	N/A	D	D					N/A	N/A		
UNFINISHED	D	D	D	D	D	D								
WIPING STAINS														
ALMOND	BCDR	BCDR	BCDR	BCDR	BCDR	BCDR	BCR	BCR	BCR	BCR	N/A	N/A		
BRIARWOOD	BCDR	BCDR	BCDR	BCDR	BCDR	BCDR	BCR	BCR	BCR	N/A	N/A	N/A		
BROWN SEPIA	BCDR	BCDR	BCDR	BCDR	BCDR	BCDR	BCR	BCR	BCR	N/A	N/A	N/A		
DRIFTWOOD	BCDR	BCDR	BCDR	BCDR	BCDR	BCDR	BCR	BCR	BCR	N/A	N/A	N/A		
PECAN	BCDR	BCDR	BCDR	BCDR	BCDR	BCDR	BCR	BCR	BCR	BCR	N/A	N/A		
RUSSET	BCDR	BCDR	BCDR	BCDR	BCDR	BCDR	BCR	BCR	BCR	N/A	N/A	N/A		
SAND	DR	DR	DR	N/A	DR	DR	DR	DR	DR	DR	N/A	N/A		
SIENNA	BCDR	BCDR	BCDR	BCDR	BCDR	BCDR	BCR	BCR	BCR	BCR	N/A	N/A		
*STONE	BCDR	BCDR	BCDR	BCDR	BCDR	BCDR	BCR	BCR	BCR	N/A	N/A	N/A		
WHEAT	BCDR	BCDR	BCDR	N/A	BCDR	BCDR	BCR	BCR	BCR	BCR	N/A	N/A		
SPRAY NO WIPE STAINS														
CASHEW	N/A	N/A	N/A		N/A	N/A	N/A	N/A	N/A		N/A	N/A		
HAZEL	N/A	N/A	N/A		N/A	N/A	N/A	N/A	N/A		N/A	N/A		
NUTMEG	N/A	N/A	N/A		N/A	N/A	N/A	N/A	N/A		N/A	N/A		
PEBBLE	N/A	N/A	N/A		N/A	N/A	N/A	N/A	N/A		N/A	N/A		
RYE	N/A	N/A	N/A	N/A	N/A	N/A	N/A	N/A	N/A		N/A	N/A		
DYE STAINS														
*CHESTNUT	BCDR	BCDR	BCDR	BCDR	BCDR	BCDR	BCDR	BCR	BCR	N/A	N/A	N/A		
*FRONTIER	BCDR	BCDR	BCDR	BCDR	BCDR	BCDR	BCDR	N/A	N/A	BCR	N/A	N/A		
*MOCHA	BCDR	BCDR	BCDR	BCDR	BCDR	BCDR	BCDR	N/A	N/A	N/A	N/A	N/A		
ANTIQUE STAIN														
*CAPRI DRIFT	N/A	N/A	DR	DR	DR	N/A	N/A	N/A	N/A	N/A	N/A	N/A		
*DUSK DRIFT	N/A	N/A	DR	DR	DR	N/A	N/A	N/A	N/A	N/A	N/A	N/A		
*FOG DRIFT	N/A	N/A	DR	DR	DR	N/A	N/A	N/A	N/A	N/A	N/A	N/A		
*WHITE DRIFT	N/A	N/A	DR	DR	DR	N/A	N/A	N/A	N/A	N/A	N/A	N/A		
PAINTS														
*ACCESSIBLE BEIGE	DERSU	DERSU	DERSU	N/A	DERSU	N/A	N/A	N/A	N/A	N/A	ESU	ERSU		
*BLACK	DR	DR	DR	N/A	DR	N/A	R	N/A	N/A	N/A		R		
*CAPRI	DERSU	DERSU	DERSU	N/A	DERSU	N/A	N/A	N/A	N/A	N/A	ESU	ERSU		
*CHARCOAL BLUE	DERS	DERS	DERS	N/A	DERS	N/A	N/A	N/A	N/A	N/A	ES	ERS		
*DUSK	DERSU	DERSU	DERSU	N/A	DERSU	N/A	N/A	N/A	N/A	N/A	ESU	ERSU		
*EVERGREEN FOG				N/A		N/A	N/A	N/A	N/A	N/A				
*FOG	DERSU	DERSU	DERSU	N/A	DERSU	N/A	N/A	N/A	N/A	N/A	ESU	ERSU		
*FOXHALL GREEN	DER	DER	DER	N/A	DER	N/A	N/A	N/A	N/A	N/A	E	ER		
*FROST	DERSU	DERSU	DERSU	N/A	DERSU	N/A	N/A	N/A	N/A	N/A	ESU	ERSU		
*IVORY	DERSU	DERSU	DERSU	N/A	DERSU	N/A	N/A	N/A	N/A	N/A	ESU	ERSU		
*OYSTER	DERSU	DERSU	DERSU	N/A	DERSU	N/A	N/A	N/A	N/A	N/A	ESU	ERSU		
*SHOJI WHITE	DERSU	DERSU	DERSU	N/A	DERSU	N/A	N/A	N/A	N/A	N/A	ESU	ERSU		
*SMOKY BLUE	DER	DER	DER	N/A	DER	N/A	N/A	N/A	N/A	N/A	E	ER		
*TAUPE	DERSU	DERSU	DERSU	N/A	DERSU	N/A	N/A	N/A	N/A	N/A	ESU	ERSU		
*WHITE	DERSU	DERSU	DERSU	N/A	DERSU	N/A	N/A	N/A	N/A	N/A	ESU	ERSU		

C=CHOCOLATE ACCENT GLAZE / B=BLACK ACCENT GLAZE / U=UMBER HIGHLIGHTS / E=EBONY HIGHLIGHTS / S=SMOKE HIGHLIGHTS
R=RUB THRU (ON STILES AND RAILS ONLY) / D=DISTRESS ----- IF OUTSIDE PROFILE IS SHAKER, OUTSIDE EDGE WILL NOT BE GLAZED

***See Page 4 for upcharges**

AUGUSTA15 DOOR STYLE



USE PRICE COLUMN "C"

MOD FULL OVERLAY ONLY
FULL OVERLAY UPCHARGE APPLIES
MORE INFORMATION ON PAGE 11

AVAILABLE IN MOLDED
1/4" FLAT PANEL INSERT
3 1/2" STILES AND RAILS

AVAILABLE WITH 5 PC DRAWER FRONTS
1/4" FLAT PANEL INSERT
3 1/2" STILES & 1 1/2" OR 2 1/2" RAILS

IF DRAWER HEIGHT IS 8 1/4", OR MORE, THE TOP AND BOTTOM RAILS WILL BE 2 1/2" INSTEAD OF 1 1/2"

DOORS TALLER THAN 42" ARE GOING TO BE TWO PANELS WITH A CENTER SPLITTER IN THE MIDDLE - SEE PAGE 27



STAIN OPTIONS	KNOTTY ALDER	BEECH	RUSTIC BEECH	BIRCH	RUSTIC BIRCH	CHERRY	HICKORY	MAPLE	*PAINT GRADE - HD	*PAINT GRADE - MAPLE
NATURAL	D	D	D	N/A	D	N/A			N/A	N/A
UNFINISHED	D	D	D	D	D	D				
WIPING STAINS										
ALMOND	B C D R	B C D R	B C D R	B C D R	B C D R	N/A	B C R	B C R	N/A	N/A
BRIARWOOD	B C D R	B C D R	B C D R	B C D R	B C D R	B C D R	B C R	N/A	N/A	N/A
BROWN SEPIA	B C D R	B C D R	B C D R	B C D R	B C D R	B C D R	B C R	N/A	N/A	N/A
DRIFTWOOD	B C D R	B C D R	B C D R	B C D R	B C D R	B C D R	B C R	N/A	N/A	N/A
PECAN	B C D R	B C D R	B C D R	B C D R	B C D R	N/A	B C R	B C R	N/A	N/A
RUSSET	B C D R	B C D R	B C D R	B C D R	B C D R	B C D R	B C R	N/A	N/A	N/A
SAND	D R	D R	D R	N/A	D R	N/A	D R	D R	N/A	N/A
SIENNA	B C D R	B C D R	B C D R	B C D R	B C D R	N/A	B C R	B C R	N/A	N/A
*STONE	B C D R	B C D R	B C D R	B C D R	B C D R	B C D R	B C R	N/A	N/A	N/A
WHEAT	B C D R	B C D R	B C D R	N/A	B C D R	N/A	B C R	B C R	N/A	N/A
SPRAY NO WIPE STAINS										
CASHEW	N/A	N/A	N/A		N/A	N/A	N/A		N/A	N/A
HAZEL	N/A	N/A	N/A		N/A	N/A	N/A		N/A	N/A
NUTMEG	N/A	N/A	N/A		N/A	N/A	N/A		N/A	N/A
PEBBLE	N/A	N/A	N/A		N/A	N/A	N/A		N/A	N/A
RYE	N/A	N/A	N/A	N/A	N/A	N/A	N/A		N/A	N/A
DYE STAINS										
*CHESTNUT	B C D R	B C D R	B C D R	B C D R	B C D R	B C D R	B C R	N/A	N/A	N/A
*FRONTIER	B C D R	B C D R	B C D R	B C D R	B C D R	B C D R	N/A	B C R	N/A	N/A
*MOCHA	B C D R	B C D R	B C D R	B C D R	B C D R	B C D R	N/A	N/A	N/A	N/A
PAINTS										
*ACCESSIBLE BEIGE	N/A	D E R S U	N/A	N/A	N/A	N/A	N/A	N/A	E S U	E R S U
*BLACK	N/A	D R	N/A	N/A	N/A	N/A	N/A	N/A		R
*CAPRI	N/A	D E R S U	N/A	N/A	N/A	N/A	N/A	N/A	E S U	E R S U
*CHARCOAL BLUE	N/A	D E R S	N/A	N/A	N/A	N/A	N/A	N/A	E S	E R S
*DUSK	N/A	D E R S U	N/A	N/A	N/A	N/A	N/A	N/A	E S U	E R S U
*EVERGREEN FOG	N/A		N/A	N/A	N/A	N/A	N/A	N/A		
*FOG	N/A	D E R S U	N/A	N/A	N/A	N/A	N/A	N/A	E S U	E R S U
*FOXHALL GREEN	N/A	D E R	N/A	N/A	N/A	N/A	N/A	N/A	E	E R
*FROST	N/A	D E R S U	N/A	N/A	N/A	N/A	N/A	N/A	E S U	E R S U
*IVORY	N/A	D E R S U	N/A	N/A	N/A	N/A	N/A	N/A	E S U	E R S U
*OYSTER	N/A	D E R S U	N/A	N/A	N/A	N/A	N/A	N/A	E S U	E R S U
*SHOJI WHITE	N/A	D E R S U	N/A	N/A	N/A	N/A	N/A	N/A	E S U	E R S U
*SMOKY BLUE	N/A	D E R	N/A	N/A	N/A	N/A	N/A	N/A	E	E R
*TAUPE	N/A	D E R S U	N/A	N/A	N/A	N/A	N/A	N/A	E S U	E R S U
*WHITE	N/A	D E R S U	N/A	N/A	N/A	N/A	N/A	N/A	E S U	E R S U

C=CHOCOLATE ACCENT GLAZE / B=BLACK ACCENT GLAZE / U=UMBER HIGHLIGHTS / E=EBONY HIGHLIGHTS / S=SMOKE HIGHLIGHTS
R=RUB THRU (ON STILES AND RAILS ONLY) / D=DISTRESS ----- IF OUTSIDE PROFILE IS SHAKER, OUTSIDE EDGE WILL NOT BE GLAZED

***See Page 4 for upcharges**

BEDFORD DOOR STYLE



USE PRICE COLUMN "C"

MOD FULL OVERLAY ONLY
FULL OVERLAY UPCHARGE APPLIES
MORE INFORMATION ON PAGE 11
NOT AVAILABLE IN MOLDED

**PAINT GRADE-HD WILL BE 3/4" HDF PANEL WITH 3/4" HDF APPLIED MOLDING.
ALL OTHER WOOD SPECIES WILL BE 3/4" PARTICLE BOARD PANEL WITH
3/4" HDF APPLIED MOLDING.**

**DOORS ARE 7/8" THICK INCLUDING PANEL AND MOLDING
APPLIED HDF MOLDING STANDS 1/8" ABOVE THE CENTER PANEL**

BEDFORD DRAWER FRONTS WILL HAVE MATCHING MOLDING

SPLIT DOORS ARE NOT AVAILABLE. INTEGRATED PANELS, WAINSCOT PANELS AND RAISED END PANELS ARE NOT AVAILABLE IN THIS DOOR STYLE.

**BEECH & BIRCH WILL HAVE HORIZONTAL GRAIN PATTERN ON DRAWER FRONTS.
RIFT OAK WILL HAVE VERTICAL GRAIN PATTERN ON DRAWER FRONT.**

DOORS TALLER THAN 46" WILL BE ONE TALL DOOR

STAIN OPTIONS	BEECH	BIRCH	MAPLE	*PAINT GRADE - HD	*RIFT WHITE OAK		
NATURAL		N/A		N/A	N/A		
UNFINISHED							
WIPING STAINS							
ALMOND				N/A			
BRIARWOOD			N/A	N/A			
BROWN SEPIA			N/A	N/A			
DRIFTWOOD			N/A	N/A			
PECAN				N/A			
RUSSET			N/A	N/A			
SAND		N/A		N/A			
SIENNA				N/A			
*STONE			N/A	N/A			
WHEAT		N/A		N/A			
SPRAY NO WIPE STAINS							
CASHEW	N/A			N/A	N/A		
HAZEL	N/A			N/A	N/A		
NUTMEG	N/A			N/A	N/A		
PEBBLE	N/A			N/A	N/A		
RYE	N/A	N/A		N/A	N/A		
DYE STAINS							
*CHESTNUT			N/A	N/A	N/A		
*FRONTIER				N/A	N/A		
*MOCHA			N/A	N/A	N/A		
PAINTS							
*ACCESSIBLE BEIGE	N/A	N/A	N/A				
*BLACK	N/A	N/A	N/A	N/A			
*CAPRI	N/A	N/A	N/A				
*CHARCOAL BLUE	N/A	N/A	N/A	N/A			
*DUSK	N/A	N/A	N/A				
*EVERGREEN FOG	N/A	N/A	N/A				
*FOG	N/A	N/A	N/A				
*FOXHALL GREEN	N/A	N/A	N/A				
*FROST	N/A	N/A	N/A				
*IVORY	N/A	N/A	N/A				
*OYSTER	N/A	N/A	N/A				
*SHOJI WHITE	N/A	N/A	N/A				
*SMOKY BLUE	N/A	N/A	N/A				
*TAUPE	N/A	N/A	N/A				
*WHITE	N/A	N/A	N/A				

***See Page 4 for upcharges**



BEDFORD DRAWER FRONT SHOWN IN RIFT WHITE OAK

BRISTOL DOOR STYLE



USE PRICE COLUMN "A"

AVAILABLE IN STD OR MOD FULL OVERLAY
MORE INFORMATION ON PAGES 10 & 11

AVAILABLE IN MOLDED
1/4" FLAT PANEL INSERT
2 1/2" STILES & RAILS

AVAILABLE WITH 5 PC DRAWER FRONTS
1/4" FLAT PANEL INSERT
2 1/2" STILES & 1 1/2" OR 2 1/2" RAILS

IF DRAWER HEIGHT IS 8 1/4", OR MORE, THE TOP AND BOTTOM RAILS WILL BE 2 1/2" INSTEAD OF 1 1/2"

DOORS TALLER THAN 42" ARE GOING TO BE TWO PANELS WITH A CENTER SPLITTER IN THE MIDDLE - SEE PAGE 27



STAIN OPTIONS	BEECH	RUSTIC BEECH	BIRCH	RUSTIC BIRCH	CHERRY	MAPLE	*PAINT GRADE - HD	*PAINT GRADE - MAPLE	WHITE OAK	RUSTIC WHITE OAK	*RIFT WHITE OAK			
NATURAL	D	D	N/A	D	N/A		N/A	N/A	N/A	N/A	N/A			
UNFINISHED	D	D	D	D	D									
WIPING STAINS														
ALMOND	BCDR	BCDR	BCDR	BCDR	N/A	BCR	N/A	N/A	R	R				
BRIARWOOD	BCDR	BCDR	BCDR	BCDR	BCDR	N/A	N/A	N/A	R	R				
BROWN SEPIA	BCDR	BCDR	BCDR	BCDR	BCDR	N/A	N/A	N/A	R	R				
DRIFTWOOD	BCDR	BCDR	BCDR	BCDR	BCDR	N/A	N/A	N/A	R	R				
PECAN	BCDR	BCDR	BCDR	BCDR	N/A	BCR	N/A	N/A	R	R				
RUSSET	BCDR	BCDR	BCDR	BCDR	BCDR	N/A	N/A	N/A	R	R				
SAND	DR	DR	N/A	DR	N/A	R	N/A	N/A	R	R				
SIENNA	BCDR	BCDR	BCDR	BCDR	N/A	BCR	N/A	N/A	R	R				
*STONE	BCDR	BCDR	BCDR	BCDR	BCDR	N/A	N/A	N/A	R	R				
WHEAT	BCDR	BCDR	N/A	BCDR	N/A	BCR	N/A	N/A	R	R				
SPRAY NO WIPE STAINS														
CASHEW	N/A	N/A		N/A	N/A		N/A	N/A	N/A	N/A	N/A			
HAZEL	N/A	N/A		N/A	N/A		N/A	N/A	N/A	N/A	N/A			
NUTMEG	N/A	N/A		N/A	N/A		N/A	N/A	N/A	N/A	N/A			
PEBBLE	N/A	N/A		N/A	N/A		N/A	N/A	N/A	N/A	N/A			
RYE	N/A	N/A	N/A	N/A	N/A		N/A	N/A	N/A	N/A	N/A			
DYE STAINS														
*CHESTNUT	BCDR	BCDR	BCDR	BCDR	BCDR	N/A	N/A	N/A	N/A	N/A	N/A			
*FRONTIER	BCDR	BCDR	BCDR	BCDR	BCDR	BCR	N/A	N/A	N/A	N/A	N/A			
*MOCHA	BCDR	BCDR	BCDR	BCDR	BCDR	N/A	N/A	N/A	N/A	N/A	N/A			
PAINTS														
*ACCESSIBLE BEIGE	DERSU	N/A	N/A	N/A	N/A	N/A	ESU	ERSU						
*BLACK	DR	N/A	N/A	N/A	N/A	N/A		R						
*CAPRI	DERSU	N/A	N/A	N/A	N/A	N/A	ESU	ERSU						
*CHARCOAL BLUE	DERS	N/A	N/A	N/A	N/A	N/A	ES	ERS						
*DUSK	DERSU	N/A	N/A	N/A	N/A	N/A	ESU	ERSU						
*EVERGREEN FOG		N/A	N/A	N/A	N/A	N/A								
*FOG	DERSU	N/A	N/A	N/A	N/A	N/A	ESU	ERSU						
*FOXHALL GREEN	DER	N/A	N/A	N/A	N/A	N/A	E	ER						
*FROST	DERSU	N/A	N/A	N/A	N/A	N/A	ESU	ERSU						
*IVORY	DERSU	N/A	N/A	N/A	N/A	N/A	ESU	ERSU						
*OYSTER	DERSU	N/A	N/A	N/A	N/A	N/A	ESU	ERSU						
*SHOJI WHITE	DERSU	N/A	N/A	N/A	N/A	N/A	ESU	ERSU						
*SMOKY BLUE	DER	N/A	N/A	N/A	N/A	N/A	E	ER						
*TAUPE	DERSU	N/A	N/A	N/A	N/A	N/A	ESU	ERSU						
*WHITE	DERSU	N/A	N/A	N/A	N/A	N/A	ESU	ERSU						

C=CHOCOLATE ACCENT GLAZE / B=BLACK ACCENT GLAZE / U=UMBER HIGHLIGHTS / E=EBONY HIGHLIGHTS / S=SMOKE HIGHLIGHTS
R=RUB THRU (ON STILES AND RAILS ONLY) / D=DISTRESS ----- IF OUTSIDE PROFILE IS SHAKER, OUTSIDE EDGE WILL NOT BE GLAZED

***See Page 4 for upcharges**

CENTENNIAL15 DOOR STYLE



USE PRICE COLUMN "G"

MOD FULL OVERLAY ONLY
FULL OVERLAY UPCHARGE APPLIES
MORE INFORMATION ON PAGE 11

AVAILABLE IN MOLDED
3/8" SOLID REVERSE RAISED PANEL
3 1/2" SHAKER STILES & RAILS

AVAILABLE WITH 5 PC DRAWER FRONTS
3/8" SOLID REVERSE RAISED PANEL
3 1/2" STILES & 1 1/2" OR 2 1/2" RAILS

IF DRAWER HEIGHT IS 8 1/4", OR MORE, THE TOP AND BOTTOM RAILS WILL BE 2 1/2" INSTEAD OF 1 1/2"

DOORS TALLER THAN 42" ARE GOING TO BE TWO PANELS WITH A CENTER SPLITTER IN THE MIDDLE - SEE PAGE 27



STAIN OPTIONS	KNOTTY ALDER	BEECH	RUSTIC BEECH	BIRCH	RUSTIC BIRCH	CHERRY	DISTRESS RU-CHERRY	HICKORY	RUSTIC HICKORY	MAPLE	*PAINT GRADE - HD	*PAINT GRADE - MAPLE		
NATURAL	D	D	D	N/A	D	D					N/A	N/A		
UNFINISHED	D	D	D	D	D	D								
WIPING STAINS														
ALMOND	BCDR	BCDR	BCDR	BCDR	BCDR	BCDR	BCR	BCR	BCR	BCR	N/A	N/A		
BRIARWOOD	BCDR	BCDR	BCDR	BCDR	BCDR	BCDR	BCR	BCR	BCR	N/A	N/A	N/A		
BROWN SEPIA	BCDR	BCDR	BCDR	BCDR	BCDR	BCDR	BCR	BCR	BCR	N/A	N/A	N/A		
DRIFTWOOD	BCDR	BCDR	BCDR	BCDR	BCDR	BCDR	BCR	BCR	BCR	N/A	N/A	N/A		
PECAN	BCDR	BCDR	BCDR	BCDR	BCDR	BCDR	BCR	BCR	BCR	BCR	N/A	N/A		
RUSSET	BCDR	BCDR	BCDR	BCDR	BCDR	BCDR	BCR	BCR	BCR	N/A	N/A	N/A		
SAND	DR	DR	DR	N/A	DR	DR	DR	DR	DR	DR	N/A	N/A		
SIENNA	BCDR	BCDR	BCDR	BCDR	BCDR	BCDR	BCR	BCR	BCR	BCR	N/A	N/A		
*STONE	BCDR	BCDR	BCDR	BCDR	BCDR	BCDR	BCR	BCR	BCR	N/A	N/A	N/A		
WHEAT	BCDR	BCDR	BCDR	N/A	BCDR	BCDR	BCR	BCR	BCR	BCR	N/A	N/A		
SPRAY NO WIPE STAINS														
CASHEW	N/A	N/A	N/A		N/A	N/A	N/A	N/A	N/A		N/A	N/A		
HAZEL	N/A	N/A	N/A		N/A	N/A	N/A	N/A	N/A		N/A	N/A		
NUTMEG	N/A	N/A	N/A		N/A	N/A	N/A	N/A	N/A		N/A	N/A		
PEBBLE	N/A	N/A	N/A		N/A	N/A	N/A	N/A	N/A		N/A	N/A		
RYE	N/A	N/A	N/A	N/A	N/A	N/A	N/A	N/A	N/A		N/A	N/A		
DYE STAINS														
*CHESTNUT	BCDR	BCDR	BCDR	BCDR	BCDR	BCDR	BCR	BCR	BCR	N/A	N/A	N/A		
*FRONTIER	BCDR	BCDR	BCDR	BCDR	BCDR	BCDR	BCR	N/A	N/A	BCR	N/A	N/A		
*MOCHA	BCDR	BCDR	BCDR	BCDR	BCDR	BCDR	BCR		N/A	N/A	N/A	N/A		
ANTIQUE STAIN														
*CAPRI DRIFT	N/A	N/A	DR	DR	DR	N/A	N/A	N/A	N/A	N/A	N/A	N/A		
*DUSK DRIFT	N/A	N/A	DR	DR	DR	N/A	N/A	N/A	N/A	N/A	N/A	N/A		
*FOG DRIFT	N/A	N/A	DR	DR	DR	N/A	N/A	N/A	N/A	N/A	N/A	N/A		
*WHITE DRIFT	N/A	N/A	DR	DR	DR	N/A	N/A	N/A	N/A	N/A	N/A	N/A		
PAINTS														
*ACCESSIBLE BEIGE	DERSU	DERSU	DERSU	N/A	DERSU	N/A	N/A	N/A	N/A	N/A	ESU	ERSU		
*BLACK	DR	DR	DR	N/A	DR	N/A	R	N/A	N/A	N/A		R		
*CAPRI	DERSU	DERSU	DERSU	N/A	DERSU	N/A	N/A	N/A	N/A	N/A	ESU	ERSU		
*CHARCOAL BLUE	DERS	DERS	DERS	N/A	DERS	N/A	N/A	N/A	N/A	N/A	ES	ERS		
*DUSK	DERSU	DERSU	DERSU	N/A	DERSU	N/A	N/A	N/A	N/A	N/A	ESU	ERSU		
*EVERGREEN FOG				N/A		N/A	N/A	N/A	N/A	N/A				
*FOG	DERSU	DERSU	DERSU	N/A	DERSU	N/A	N/A	N/A	N/A	N/A	ESU	ERSU		
*FOXHALL GREEN	DER	DER	DER	N/A	DER	N/A	N/A	N/A	N/A	N/A	E	ER		
*FROST	DERSU	DERSU	DERSU	N/A	DERSU	N/A	N/A	N/A	N/A	N/A	ESU	ERSU		
*IVORY	DERSU	DERSU	DERSU	N/A	DERSU	N/A	N/A	N/A	N/A	N/A	ESU	ERSU		
*OYSTER	DERSU	DERSU	DERSU	N/A	DERSU	N/A	N/A	N/A	N/A	N/A	ESU	ERSU		
*SHOJI WHITE	DERSU	DERSU	DERSU	N/A	DERSU	N/A	N/A	N/A	N/A	N/A	ESU	ERSU		
*SMOKY BLUE	DER	DER	DER	N/A	DER	N/A	N/A	N/A	N/A	N/A	E	ER		
*TAUPE	DERSU	DERSU	DERSU	N/A	DERSU	N/A	N/A	N/A	N/A	N/A	ESU	ERSU		
*WHITE	DERSU	DERSU	DERSU	N/A	DERSU	N/A	N/A	N/A	N/A	N/A	ESU	ERSU		

C=CHOCOLATE ACCENT GLAZE / B=BLACK ACCENT GLAZE / U=UMBER HIGHLIGHTS / E=EBONY HIGHLIGHTS / S=SMOKE HIGHLIGHTS
R=RUB THRU (ON STILES AND RAILS ONLY) / D=DISTRESS ----- IF OUTSIDE PROFILE IS SHAKER, OUTSIDE EDGE WILL NOT BE GLAZED

***See Page 4 for upcharges**

CHARLESTON15 DOOR STYLE



USE PRICE COLUMN "C"

AVAILABLE IN STD OR MOD FULL OVERLAY
MORE INFORMATION ON PAGES 10 & 11

AVAILABLE IN MOLDED
3/8" SOLID REVERSE RAISED PANEL
2 1/2" SHAKER STILES & RAILS

AVAILABLE WITH 5 PC DRAWER FRONTS
3/8" SOLID REVERSE RAISED PANEL
2 1/2" STILES & 1 1/2" OR 2 1/2" RAILS

IF DRAWER HEIGHT IS 8 1/4", OR MORE, THE TOP AND BOTTOM RAILS WILL BE 2 1/2" INSTEAD OF 1 1/2"

DOORS TALLER THAN 42" ARE GOING TO BE TWO PANELS WITH A CENTER SPLITTER IN THE MIDDLE - SEE PAGE 27



STAIN OPTIONS	KNOTTY ALDER	BEECH	RUSTIC BEECH	BIRCH	RUSTIC BIRCH	CHERRY	DISTRESS RU-CHERRY	HICKORY	RUSTIC HICKORY	MAPLE	*PAINT GRADE - HD	*PAINT GRADE - MAPLE	WHITE OAK	RUSTIC WHITE OAK	*RIFT WHITE OAK
NATURAL	D	D	D	N/A	D	D					N/A	N/A	N/A	N/A	N/A
UNFINISHED	D	D	D	D	D	D									
WIPING STAINS															
ALMOND	BCDR	BCDR	BCDR	BCDR	BCDR	BCDR	BCR	BCR	BCR	BCR			R	R	
BRIARWOOD	BCDR	BCDR	BCDR	BCDR	BCDR	BCDR	BCR	BCR	BCR				R	R	
BROWN SEPIA	BCDR	BCDR	BCDR	BCDR	BCDR	BCDR	BCR	BCR	BCR				R	R	
DRIFTWOOD	BCDR	BCDR	BCDR	BCDR	BCDR	BCDR	BCR	BCR	BCR				R	R	
PECAN	BCDR	BCDR	BCDR	BCDR	BCDR	BCDR	BCR	BCR	BCR	BCR			R	R	
RUSSET	BCDR	BCDR	BCDR	BCDR	BCDR	BCDR	BCR	BCR	BCR				R	R	
SAND	DR	DR	DR		DR	DR	DR	DR	DR	DR			R	R	
SIENNA	BCDR	BCDR	BCDR	BCDR	BCDR	BCDR	BCR	BCR	BCR	BCR			R	R	
*STONE	BCDR	BCDR	BCDR	BCDR	BCDR	BCDR	BCR	BCR	BCR				R	R	
WHEAT	BCDR	BCDR	BCDR		BCDR	BCDR	BCR	BCR	BCR	BCR			R	R	
SPRAY NO WIPE STAINS															
CASHEW	N/A	N/A	N/A		N/A	N/A	N/A	N/A	N/A		N/A	N/A	N/A	N/A	N/A
HAZEL	N/A	N/A	N/A		N/A	N/A	N/A	N/A	N/A		N/A	N/A	N/A	N/A	N/A
NUTMEG	N/A	N/A	N/A		N/A	N/A	N/A	N/A	N/A		N/A	N/A	N/A	N/A	N/A
PEBBLE	N/A	N/A	N/A		N/A	N/A	N/A	N/A	N/A		N/A	N/A	N/A	N/A	N/A
RYE	N/A	N/A	N/A	N/A	N/A	N/A	N/A	N/A	N/A		N/A	N/A	N/A	N/A	N/A
DYE STAINS															
*CHESTNUT	BCDR	BCDR	BCDR	BCDR	BCDR	BCDR	BCR	BCR	BCR	N/A	N/A	N/A	N/A	N/A	N/A
*FRONTIER	BCDR	BCDR	BCDR	BCDR	BCDR	BCDR	BCR	N/A	N/A	BCR	N/A	N/A	N/A	N/A	N/A
*MOCHA	BCDR	BCDR	BCDR	BCDR	BCDR	BCDR	BCR	N/A	N/A	N/A	N/A	N/A	N/A	N/A	N/A
ANTIQUE STAIN															
*CAPRI DRIFT	N/A	N/A	DR	DR	DR	N/A	N/A	N/A	N/A	N/A	N/A	N/A	DR	DR	N/A
*DUSK DRIFT	N/A	N/A	DR	DR	DR	N/A	N/A	N/A	N/A	N/A	N/A	N/A	DR	DR	N/A
*FOG DRIFT	N/A	N/A	DR	DR	DR	N/A	N/A	N/A	N/A	N/A	N/A	N/A	DR	DR	N/A
*WHITE DRIFT	N/A	N/A	DR	DR	DR	N/A	N/A	N/A	N/A	N/A	N/A	N/A	DR	DR	N/A
PAINTS															
*ACCESSIBLE BEIGE	DERSU	DERSU	DERSU	N/A	DERSU	N/A	N/A	N/A	N/A	N/A	ESU	ERSU			
*BLACK	DR	DR	DR	N/A	DR	N/A	R	N/A	N/A	N/A		R			
*CAPRI	DERSU	DERSU	DERSU	N/A	DERSU	N/A	N/A	N/A	N/A	N/A	ESU	ERSU			
*CHARCOAL BLUE	DERS	DERS	DERS	N/A	DERS	N/A	N/A	N/A	N/A	N/A	ES	ERS			
*DUSK	DERSU	DERSU	DERSU	N/A	DERSU	N/A	N/A	N/A	N/A	N/A	ESU	ERSU			
*EVERGREEN FOG				N/A		N/A	N/A	N/A	N/A	N/A					
*FOG	DERSU	DERSU	DERSU	N/A	DERSU	N/A	N/A	N/A	N/A	N/A	ESU	ERSU			
*FOXHALL GREEN	DER	DER	DER	N/A	DER	N/A	N/A	N/A	N/A	N/A	E	ER			
*FROST	DERSU	DERSU	DERSU	N/A	DERSU	N/A	N/A	N/A	N/A	N/A	ESU	ERSU			
*IVORY	DERSU	DERSU	DERSU	N/A	DERSU	N/A	N/A	N/A	N/A	N/A	ESU	ERSU			
*OYSTER	DERSU	DERSU	DERSU	N/A	DERSU	N/A	N/A	N/A	N/A	N/A	ESU	ERSU			
*SHOJI WHITE	DERSU	DERSU	DERSU	N/A	DERSU	N/A	N/A	N/A	N/A	N/A	ESU	ERSU			
*SMOKY BLUE	DER	DER	DER	N/A	DER	N/A	N/A	N/A	N/A	N/A	E	ER			
*TAUPE	DERSU	DERSU	DERSU	N/A	DERSU	N/A	N/A	N/A	N/A	N/A	ESU	ERSU			
*WHITE	DERSU	DERSU	DERSU	N/A	DERSU	N/A	N/A	N/A	N/A	N/A	ESU	ERSU			

C=CHOCOLATE ACCENT GLAZE / B=BLACK ACCENT GLAZE / U=UMBER HIGHLIGHTS / E=EBONY HIGHLIGHTS / S=SMOKE HIGHLIGHTS
R=RUB THRU (ON STILES AND RAILS ONLY) / D=DISTRESS ----- IF OUTSIDE PROFILE IS SHAKER, OUTSIDE EDGE WILL NOT BE GLAZED

***See Page 4 for upcharges**

EASTON DOOR STYLE



USE PRICE COLUMN "C"

AVAILABLE IN STD OR MOD FULL OVERLAY
MORE INFORMATION ON PAGES 10 & 11

AVAILABLE IN MOLDED
5/8" SOLID RAISED PANEL
2 1/2" STILES & RAILS

AVAILABLE WITH 5 PC DRAWER FRONTS
5/8" SOLID RAISED PANEL
2 1/2" STILES & 1 1/2" OR 2 1/2" RAILS

IF DRAWER HEIGHT IS 8 1/4", OR MORE, THE TOP AND BOTTOM RAILS WILL BE 2 1/2" INSTEAD OF 1 1/2"

DOORS TALLER THAN 42" ARE GOING TO BE TWO PANELS WITH A CENTER SPLITTER IN THE MIDDLE - SEE PAGE 27



STAIN OPTIONS	BEECH	RUSTIC BEECH	BIRCH	RUSTIC BIRCH	CHERRY	MAPLE	*PAINT GRADE - HD	*PAINT GRADE - MAPLE	WHITE OAK	RUSTIC WHITE OAK	*RIFT WHITE OAK			
NATURAL	D	D	N/A	D	D		N/A	N/A	N/A	N/A	N/A			
UNFINISHED	D	D	D	D	D									
WIPING STAINS														
ALMOND	BCDR	BCDR	BCDR	BCDR	BCDR	BCR	N/A	N/A	R	R				
BRIARWOOD	BCDR	BCDR	BCDR	BCDR	BCDR	N/A	N/A	N/A	R	R				
BROWN SEPIA	BCDR	BCDR	BCDR	BCDR	BCDR	N/A	N/A	N/A	R	R				
DRIFTWOOD	BCDR	BCDR	BCDR	BCDR	BCDR	N/A	N/A	N/A	R	R				
PECAN	BCDR	BCDR	BCDR	BCDR	BCDR	BCR	N/A	N/A	R	R				
RUSSET	BCDR	BCDR	BCDR	BCDR	BCDR	N/A	N/A	N/A	R	R				
SAND	DR	DR	N/A	DR	DR	DR	N/A	N/A	R	R				
SIENNA	BCDR	BCDR	BCDR	BCDR	BCDR	BCR	N/A	N/A	R	R				
*STONE	BCDR	BCDR	BCDR	BCDR	BCDR	N/A	N/A	N/A	R	R				
WHEAT	BCDR	BCDR	N/A	BCDR	BCDR	BCR	N/A	N/A	R	R				
SPRAY NO WIPE STAINS														
CASHEW	N/A	N/A		N/A	N/A		N/A	N/A	N/A	N/A	N/A			
HAZEL	N/A	N/A		N/A	N/A		N/A	N/A	N/A	N/A	N/A			
NUTMEG	N/A	N/A		N/A	N/A		N/A	N/A	N/A	N/A	N/A			
PEBBLE	N/A	N/A		N/A	N/A		N/A	N/A	N/A	N/A	N/A			
RYE	N/A	N/A	N/A	N/A	N/A		N/A	N/A	N/A	N/A	N/A			
DYE STAINS														
*CHESTNUT	BCDR	BCDR	BCDR	BCDR	BCDR	N/A	N/A	N/A	N/A	N/A	N/A			
*FRONTIER	BCDR	BCDR	BCDR	BCDR	BCDR	N/A	N/A	N/A	N/A	N/A	N/A			
*MOCHA	BCDR	BCDR	BCDR	BCDR	BCDR	N/A	N/A	N/A	N/A	N/A	N/A			
ANTIQUE STAIN														
*CAPRI DRIFT	N/A	DR	DR	N/A	N/A	N/A	N/A	N/A	DR	DR	N/A			
*DUSK DRIFT	N/A	DR	DR	N/A	N/A	N/A	N/A	N/A	DR	DR	N/A			
*FOG DRIFT	N/A	DR	DR	N/A	N/A	N/A	N/A	N/A	DR	DR	N/A			
*WHITE DRIFT	N/A	DR	DR	N/A	N/A	N/A	N/A	N/A	DR	DR	N/A			
PAINTS														
*ACCESSIBLE BEIGE	DERSU	DERSU	N/A	N/A	N/A	N/A	ESU	ERSU						
*BLACK	DR	DR	N/A	N/A	N/A	N/A		R						
*CAPRI	DERSU	DERSU	N/A	N/A	N/A	N/A	ESU	ERSU						
*CHARCOAL BLUE	DERS	DERS	N/A	N/A	N/A	N/A	ES	ERS						
*DUSK	DERSU	DERSU	N/A	N/A	N/A	N/A	ESU	ERSU						
*EVERGREEN FOG			N/A	N/A	N/A	N/A								
*FOG	DERSU	DERSU	N/A	N/A	N/A	N/A	ESU	ERSU						
*FOXHALL GREEN	DER	DER	N/A	N/A	N/A	N/A	E	ER						
*FROST	DERSU	DERSU	N/A	N/A	N/A	N/A	ESU	ERSU						
*IVORY	DERSU	DERSU	N/A	N/A	N/A	N/A	ESU	ERSU						
*OYSTER	DERSU	DERSU	N/A	N/A	N/A	N/A	ESU	ERSU						
*SHOJI WHITE	DERSU	DERSU	N/A	N/A	N/A	N/A	ESU	ERSU						
*SMOKY BLUE	DER	DER	N/A	N/A	N/A	N/A	E	ER						
*TAUPE	DERSU	DERSU	N/A	N/A	N/A	N/A	ESU	ERSU						
*WHITE	DERSU	DERSU	N/A	N/A	N/A	N/A	ESU	ERSU						

C=CHOCOLATE ACCENT GLAZE / B=BLACK ACCENT GLAZE / U=UMBER HIGHLIGHTS / E=EBONY HIGHLIGHTS / S=SMOKE HIGHLIGHTS
R=RUB THRU (ON STILES AND RAILS ONLY) / D=DISTRESS ----- IF OUTSIDE PROFILE IS SHAKER, OUTSIDE EDGE WILL NOT BE GLAZED

***See Page 4 for upcharges**

FAIRWAY DOOR STYLE



USE PRICE COLUMN "C"

AVAILABLE IN STD OR MOD FULL OVERLAY
MORE INFORMATION ON PAGES 10 & 11

AVAILABLE IN MOLDED
3/8" SOLID REVERSE RAISED PANEL
2 1/2" STILES & RAILS

AVAILABLE WITH 5 PC DRAWER FRONTS
3/8" SOLID REVERSE RAISED PANEL
2 1/2" STILES & 1 1/2" OR 2 1/2" RAILS

IF DRAWER HEIGHT IS 8 1/4", OR MORE, THE TOP AND BOTTOM RAILS WILL BE 2 1/2" INSTEAD OF 1 1/2"

DOORS TALLER THAN 42" ARE GOING TO BE TWO PANELS WITH A CENTER SPLITTER IN THE MIDDLE - SEE PAGE 27



STAIN OPTIONS	BEECH	RUSTIC BEECH	BIRCH	RUSTIC BIRCH	CHERRY	MAPLE	*PAINT GRADE - HD	*PAINT GRADE - MAPLE	WHITE OAK	RUSTIC WHITE OAK	*RIFT WHITE OAK			
NATURAL	D	D	N/A	D	D		N/A	N/A	N/A	N/A	N/A			
UNFINISHED	D	D	D	D	D									
WIPING STAINS														
ALMOND	BCDR	BCDR	BCDR	BCDR	BCDR	BCR	N/A	N/A	R	R				
BRIARWOOD	BCDR	BCDR	BCDR	BCDR	BCDR	N/A	N/A	N/A	R	R				
BROWN SEPIA	BCDR	BCDR	BCDR	BCDR	BCDR	N/A	N/A	N/A	R	R				
DRIFTWOOD	BCDR	BCDR	BCDR	BCDR	BCDR	N/A	N/A	N/A	R	R				
PECAN	BCDR	BCDR	BCDR	BCDR	BCDR	BCR	N/A	N/A	R	R				
RUSSET	BCDR	BCDR	BCDR	BCDR	BCDR	N/A	N/A	N/A	R	R				
SAND	DR	DR	N/A	DR	DR	DR	N/A	N/A	R	R				
SIENNA	BCDR	BCDR	BCDR	BCDR	BCDR	BCR	N/A	N/A	R	R				
*STONE	BCDR	BCDR	BCDR	BCDR	BCDR	N/A	N/A	N/A	R	R				
WHEAT	BCDR	BCDR	N/A	BCDR	BCDR	BCR	N/A	N/A	R	R				
SPRAY NO WIPE STAINS														
CASHEW	N/A	N/A		N/A	N/A		N/A	N/A	N/A	N/A	N/A			
HAZEL	N/A	N/A		N/A	N/A		N/A	N/A	N/A	N/A	N/A			
NUTMEG	N/A	N/A		N/A	N/A		N/A	N/A	N/A	N/A	N/A			
PEBBLE	N/A	N/A		N/A	N/A		N/A	N/A	N/A	N/A	N/A			
RYE	N/A	N/A	N/A	N/A	N/A		N/A	N/A	N/A	N/A	N/A			
DYE STAINS														
*CHESTNUT	BCDR	BCDR	BCDR	BCDR	BCDR	N/A	N/A	N/A	N/A	N/A	N/A			
*FRONTIER	BCDR	BCDR	BCDR	BCDR	BCDR	BCR	N/A	N/A	N/A	N/A	N/A			
*MOCHA	BCDR	BCDR	BCDR	BCDR	BCDR	N/A	N/A	N/A	N/A	N/A	N/A			
ANTIQUE STAIN														
*CAPRI DRIFT	N/A	DR	DR	N/A	N/A	N/A	N/A	N/A	DR	DR	N/A			
*DUSK DRIFT	N/A	DR	DR	N/A	N/A	N/A	N/A	N/A	DR	DR	N/A			
*FOG DRIFT	N/A	DR	DR	N/A	N/A	N/A	N/A	N/A	DR	DR	N/A			
*WHITE DRIFT	N/A	DR	DR	N/A	N/A	N/A	N/A	N/A	DR	DR	N/A			
PAINTS														
*ACCESSIBLE BEIGE	DERSU	DERSU	N/A	N/A	N/A	N/A	ESU	ERSU						
*BLACK	DR	DR	N/A	N/A	N/A	N/A		R						
*CAPRI	DERSU	DERSU	N/A	N/A	N/A	N/A	ESU	ERSU						
*CHARCOAL BLUE	DERS	DERS	N/A	N/A	N/A	N/A	ES	ERS						
*DUSK	DERSU	DERSU	N/A	N/A	N/A	N/A	ESU	ERSU						
*EVERGREEN FOG			N/A	N/A	N/A	N/A								
*FOG	DERSU	DERSU	N/A	N/A	N/A	N/A	ESU	ERSU						
*FOXHALL GREEN	DER	DER	N/A	N/A	N/A	N/A	E	ER						
*FROST	DERSU	DERSU	N/A	N/A	N/A	N/A	ESU	ERSU						
*IVORY	DERSU	DERSU	N/A	N/A	N/A	N/A	ESU	ERSU						
*OYSTER	DERSU	DERSU	N/A	N/A	N/A	N/A	ESU	ERSU						
*SHOJI WHITE	DERSU	DERSU	N/A	N/A	N/A	N/A	ESU	ERSU						
*SMOKY BLUE	DER	DER	N/A	N/A	N/A	N/A	E	ER						
*TAUPE	DERSU	DERSU	N/A	N/A	N/A	N/A	ESU	ERSU						
*WHITE	DERSU	DERSU	N/A	N/A	N/A	N/A	ESU	ERSU						

C=CHOCOLATE ACCENT GLAZE / B=BLACK ACCENT GLAZE / U=UMBER HIGHLIGHTS / E=EBONY HIGHLIGHTS / S=SMOKE HIGHLIGHTS
R=RUB THRU (ON STILES AND RAILS ONLY) / D=DISTRESS ----- IF OUTSIDE PROFILE IS SHAKER, OUTSIDE EDGE WILL NOT BE GLAZED

***See Page 4 for upcharges**

GATEWAY DOOR STYLE



USE PRICE COLUMN "C"

MOD FULL OVERLAY ONLY

FULL OVERLAY UPCHARGE APPLIES

MORE INFORMATION ON PAGE 11

NOT AVAILABLE IN MOLDED

PAINT GRADE-HD WILL BE 3/4" HDF PANEL WITH 1/2" HDF APPLIED MOLDING. ALL OTHER WOOD SPECIES WILL BE 3/4" PARTICLE BOARD CORE PANEL WITH 1/2" HDF APPLIED MOLDING.

SPLIT DOORS NOT AVAILABLE

GATEWAY DRAWER FRONTS WILL HAVE MATCHING MOLDING

INTEGRATED PANELS, WAINSCOT PANELS AND RAISED END PANELS ARE NOT AVAILABLE IN THIS DOOR STYLE.

BEECH, & BIRCH WILL HAVE HORIZONTAL GRAIN PATTERN ON DRAWER FRONTS. RIFT OAK WILL HAVE VERTICAL GRAIN PATTERN ON DRAWER FRONT.

DOORS TALLER THAN 46" ARE GOING TO BE 2 DOORS ATTACHED TOGETHER WITH BRACKETS ON THE BACK SIDE - SEE PAGE 27



STAIN OPTIONS	BEECH	BIRCH	MAPLE	*PAINT GRADE - HD	*RIFT WHITE OAK		
NATURAL		N/A		N/A	N/A		
UNFINISHED							
WIPING STAINS							
ALMOND				N/A			
BRIARWOOD			N/A	N/A			
BROWN SEPIA			N/A	N/A			
DRIFTWOOD			N/A	N/A			
PECAN				N/A			
RUSSET			N/A	N/A			
SAND		N/A		N/A			
SIENNA				N/A			
*STONE			N/A	N/A			
WHEAT		N/A		N/A			
SPRAY NO WIPE STAINS							
CASHEW	N/A			N/A	N/A		
HAZEL	N/A			N/A	N/A		
NUTMEG	N/A			N/A	N/A		
PEBBLE	N/A			N/A	N/A		
RYE	N/A	N/A		N/A	N/A		
DYE STAINS							
*CHESTNUT			N/A	N/A	N/A		
*FRONTIER				N/A	N/A		
*MOCHA			N/A	N/A	N/A		
PAINTS							
*ACCESSIBLE BEIGE	N/A	N/A	N/A				
*BLACK	N/A	N/A	N/A	N/A			
*CAPRI	N/A	N/A	N/A				
*CHARCOAL BLUE	N/A	N/A	N/A	N/A			
*DUSK	N/A	N/A	N/A				
*EVERGREEN FOG	N/A	N/A	N/A				
*FOG	N/A	N/A	N/A				
*FOXHALL GREEN	N/A	N/A	N/A				
*FROST	N/A	N/A	N/A				
*IVORY	N/A	N/A	N/A				
*OYSTER	N/A	N/A	N/A				
*SHOJI WHITE	N/A	N/A	N/A				
*SMOKY BLUE	N/A	N/A	N/A				
*TAUPE	N/A	N/A	N/A				
*WHITE	N/A	N/A	N/A				

***See Page 4 for upcharges**

HARBOR DOOR STYLE



USE PRICE COLUMN "C"

AVAILABLE IN STD OR MOD FULL OVERLAY

MORE INFORMATION ON PAGES 10 & 11

1/4" HDF PANEL INSERT
2 1/2" HDF STILES & RAILS WITH 3/4" APPLIED MOLDING

5 PC DRAWER FRONTS ONLY (NO CHARGE)
1/4" HDF PANEL INSERT
2 1/2" STILES & 1 1/2" OR 2 1/2" RAILS WITH 3/4" APPLIED MOLDING

IF DRAWER HEIGHT IS 8 1/4", OR MORE, THE TOP AND BOTTOM RAILS WILL BE 2 1/2" INSTEAD OF 1 1/2"

DOORS TALLER THAN 42" ARE GOING TO BE TWO PANELS WITH A CENTER SPLITTER IN THE MIDDLE - SEE PAGE 27

INTEGRATED PANELS, WAINSCOT PANELS AND RAISED END PANELS ARE NOT AVAILABLE IN THIS DOOR STYLE.



STAIN OPTIONS	*PAINT GRADE - HD									
NATURAL	N/A									
UNFINISHED										
WIPING STAINS										
ALMOND	N/A									
BRIARWOOD	N/A									
BROWN SEPIA	N/A									
DRIFTWOOD	N/A									
PECAN	N/A									
RUSSET	N/A									
SAND	N/A									
SIENNA	N/A									
*STONE	N/A									
WHEAT	N/A									
SPRAY NO WIPE STAINS										
CASHEW	N/A									
HAZEL	N/A									
NUTMEG	N/A									
PEBBLE	N/A									
RYE	N/A									
DYE STAINS										
*CHESTNUT	N/A									
*FRONTIER	N/A									
*MOCHA	N/A									
PAINTS										
*ACCESSIBLE BEIGE	E S U									
*BLACK										
*CAPRI	E S U									
*CHARCOAL BLUE	E S									
*DUSK	E S U									
*EVERGREEN FOG										
*FOG	E S U									
*FOXHALL GREEN	E									
*FROST	E S U									
*IVORY	E S U									
OYSTER	E S U									
*SHOJI WHITE	E S U									
*SMOKY BLUE	E									
*TAUPE	E S U									
*WHITE	E S U									

U=UMBER HIGHLIGHTS / E=EBONY HIGHLIGHTS / S=SMOKE HIGHLIGHTS
R=RUB THRU (ON STILES AND RAILS ONLY) / D=DISTRESS

***See Page 4 for upcharges**

HASTINGS15 DOOR STYLE



USE PRICE COLUMN "C"

AVAILABLE IN STD OR MOD FULL OVERLAY
MORE INFORMATION ON PAGES 10 & 11

AVAILABLE IN MOLDED
5/8" SOLID RAISED PANEL
2 1/2" SHAKER STILES & RAILS

AVAILABLE WITH 5 PC DRAWER FRONTS
5/8" SOLID RAISED PANEL
2 1/2" STILES & 1 1/2" OR 2 1/2" RAILS

IF DRAWER HEIGHT IS 8 1/4", OR MORE, THE TOP AND BOTTOM RAILS WILL BE 2 1/2" INSTEAD OF 1 1/2"

DOORS TALLER THAN 42" ARE GOING TO BE TWO PANELS WITH A CENTER SPLITTER IN THE MIDDLE - SEE PAGE 27



STAIN OPTIONS	KNOTTY ALDER	BEECH	RUSTIC BEECH	BIRCH	RUSTIC BIRCH	CHERRY	DISTRESS RU-CHERRY	HICKORY	RUSTIC HICKORY	MAPLE	*PAINT GRADE - HD	*PAINT GRADE - MAPLE	WHITE OAK	RUSTIC WHITE OAK	*RIFT WHITE OAK
NATURAL	D	D	D	N/A	D	D					N/A	N/A	N/A	N/A	N/A
UNFINISHED	D	D	D	D	D	D									
WIPING STAINS															
ALMOND	BCDR	BCDR	BCDR	BCDR	BCDR	BCDR	BCR	BCR	BCR	BCR	N/A	N/A	R	R	
BRIARWOOD	BCDR	BCDR	BCDR	BCDR	BCDR	BCDR	BCR	BCR	BCR	N/A	N/A	N/A	R	R	
BROWN SEPIA	BCDR	BCDR	BCDR	BCDR	BCDR	BCDR	BCR	BCR	BCR	N/A	N/A	N/A	R	R	
DRIFTWOOD	BCDR	BCDR	BCDR	BCDR	BCDR	BCDR	BCR	BCR	BCR	N/A	N/A	N/A	R	R	
PECAN	BCDR	BCDR	BCDR	BCDR	BCDR	BCDR	BCR	BC R	BCR	BCR	N/A	N/A	R	R	
RUSSET	BCDR	BCDR	BCDR	BCDR	BCDR	BCDR	BCR	BCR	BCR	N/A	N/A	N/A	R	R	
SAND	DR	DR	DR	N/A	DR	DR	DR	DR	DR	DR	N/A	N/A	R	R	
SIENNA	BCDR	BCDR	BCDR	BCDR	BCDR	BCDR	BCR	BCR	BCR	BCR	N/A	N/A	R	R	
*STONE	BCDR	BCDR	BCDR	BCDR	BCDR	BCDR	BCR	BCR	BCR	N/A	N/A	N/A	R	R	
WHEAT	BCDR	BCDR	BCDR	N/A	BCDR	BCDR	BCR	BC R	BCR	BCR	N/A	N/A	R	R	
SPRAY NO WIPE STAINS															
CASHEW	N/A	N/A	N/A		N/A	N/A	N/A	N/A	N/A		N/A	N/A	N/A	N/A	N/A
HAZEL	N/A	N/A	N/A		N/A	N/A	N/A	N/A	N/A		N/A	N/A	N/A	N/A	N/A
NUTMEG	N/A	N/A	N/A		N/A	N/A	N/A	N/A	N/A		N/A	N/A	N/A	N/A	N/A
PEBBLE	N/A	N/A	N/A		N/A	N/A	N/A	N/A	N/A		N/A	N/A	N/A	N/A	N/A
RYE	N/A	N/A	N/A	N/A	N/A	N/A	N/A	N/A	N/A		N/A	N/A	N/A	N/A	N/A
DYE STAINS															
*CHESTNUT	BCDR	BCDR	BCDR	BCDR	BCDR	BCDR	BCDR	BCR	BCR	N/A	N/A	N/A	N/A	N/A	N/A
*FRONTIER	BCDR	BCDR	BCDR	BCDR	BCDR	BCDR	BCDR	N/A	N/A	N/A	N/A	N/A	N/A	N/A	N/A
*MOCHA	BCDR	BCDR	BCDR	BCDR	BCDR	BCDR	BCDR	N/A	N/A	N/A	N/A	N/A	N/A	N/A	N/A
ANTIQUE STAIN															
*CAPRI DRIFT	N/A	N/A	DR	DR	DR	N/A	N/A	N/A	N/A	N/A	N/A	N/A	DR	DR	N/A
*FOG DRIFT	N/A	N/A	DR	DR	DR	N/A	N/A	N/A	N/A	N/A	N/A	N/A	DR	DR	N/A
*DUSK DRIFT	N/A	N/A	DR	DR	DR	N/A	N/A	N/A	N/A	N/A	N/A	N/A	DR	DR	N/A
*WHITE DRIFT	N/A	N/A	DR	DR	DR	N/A	N/A	N/A	N/A	N/A	N/A	N/A	DR	DR	N/A
PAINTS															
*ACCESSIBLE BEIGE	DERSU	DERSU	DERSU	N/A	DERSU	N/A	N/A	N/A	N/A	N/A	ESU	ERSU			
*BLACK	DR	DR	DR	N/A	DR	N/A	R	N/A	N/A	N/A		R			
*CAPRI	DERSU	DERSU	DERSU	N/A	DERSU	N/A	N/A	N/A	N/A	N/A	ESU	ERSU			
*CHARCOAL BLUE	DERS	DERS	DERS	N/A	DERS	N/A	N/A	N/A	N/A	N/A	ES	ERS			
*DUSK	DERSU	DERSU	DERSU	N/A	DERSU	N/A	N/A	N/A	N/A	N/A	ESU	ERSU			
*EVERGREEN FOG				N/A		N/A	N/A	N/A	N/A	N/A					
*FOG	DERSU	DERSU	DERSU	N/A	DERSU	N/A	N/A	N/A	N/A	N/A	ESU	ERSU			
*FOXHALL GREEN	DER	DER	DER	N/A	DER	N/A	N/A	N/A	N/A	N/A	E	ER			
*FROST	DERSU	DERSU	DERSU	N/A	DERSU	N/A	N/A	N/A	N/A	N/A	ESU	ERSU			
*IVORY	DERSU	DERSU	DERSU	N/A	DERSU	N/A	N/A	N/A	N/A	N/A	ESU	ERSU			
*OYSTER	DERSU	DERSU	DERSU	N/A	DERSU	N/A	N/A	N/A	N/A	N/A	ESU	ERSU			
*SHOJI WHITE	DERSU	DERSU	DERSU	N/A	DERSU	N/A	N/A	N/A	N/A	N/A	ESU	ERSU			
*SMOKY BLUE	DER	DER	DER	N/A	DER	N/A	N/A	N/A	N/A	N/A	E	ER			
*TAUPE	DERSU	DERSU	DERSU	N/A	DERSU	N/A	N/A	N/A	N/A	N/A	ESU	ERSU			
*WHITE	DERSU	DERSU	DERSU	N/A	DERSU	N/A	N/A	N/A	N/A	N/A	ESU	ERSU			

C=CHOCOLATE ACCENT GLAZE / B=BLACK ACCENT GLAZE / U=UMBER HIGHLIGHTS / E=EBONY HIGHLIGHTS / S=SMOKE HIGHLIGHTS
R=RUB THRU (ON STILES AND RAILS ONLY) / D=DISTRESS ----- IF OUTSIDE PROFILE IS SHAKER, OUTSIDE EDGE WILL NOT BE GLAZED
***See Page 4 for upcharges**

LIBERTY DOOR STYLE



USE PRICE COLUMN "C"

AVAILABLE IN STD OR FULL OVERLAY

MORE INFORMATION ON PAGES 10 & 11

NOT AVAILABLE IN MOLDED

PAINT GRADE-HD WILL BE 3/4" HDF PANEL WITH VENEER EDGEBANDING
ALL OTHER WOOD SPECIES WILL BE 3/4" PARTICLE BOARD VENEER PANEL WITH VENEER EDGEBANDING

OPEN FRAME & MULLION DOORS WILL BE A STILE AND RAIL DESIGN WITH SHAKER PROFILE
SPLIT DOORS NOT AVAILABLE

DRAWER FRONT WILL BE 3/4" FRONT WITH EDGEBANDING

CHERRY, BEECH, MAPLE, & BIRCH WILL HAVE HORIZONTAL GRAIN PATTERN ON DRAWER FRONTS.
RIFT WHITE OAK DRAWER FRONT WILL HAVE A VERTICAL GRAIN PATTERN.
IT WILL CLOSELY MATCH THE GRAIN PATTERN OF THE CABINET DOOR.

NO 5 PIECE DRAWER FRONTS

INTEGRATED PANELS, WAINSCOT PANELS AND RAISED END PANELS ARE NOT AVAILABLE IN THIS DOOR STYLE

STAIN OPTIONS	BEECH	BIRCH	CHERRY	MAPLE	*PAINT GRADE - HD	*RIFT WHITE OAK	
NATURAL		N/A	N/A		N/A	N/A	
UNFINISHED							
WIPING STAINS							
ALMOND			N/A		N/A		
BRIARWOOD				N/A	N/A		
BROWN SEPIA				N/A	N/A		
DRIFTWOOD			N/A	N/A	N/A		
PECAN			N/A		N/A		
RUSSET				N/A	N/A		
SAND		N/A	N/A		N/A		
SIENNA			N/A		N/A		
*STONE				N/A	N/A		
WHEAT		N/A	N/A		N/A		
SPRAY NO WIPE STAINS							
CASHEW	N/A		N/A		N/A	N/A	
HAZEL	N/A		N/A		N/A	N/A	
NUTMEG	N/A		N/A		N/A	N/A	
PEBBLE	N/A		N/A		N/A	N/A	
RYE	N/A	N/A	N/A		N/A	N/A	
DYE STAINS							
*CHESTNUT				N/A	N/A	N/A	
*FRONTIER					N/A	N/A	
*MOCHA				N/A	N/A	N/A	
PAINTS							
*ACCESSIBLE BEIGE	N/A	N/A	N/A	N/A			
*BLACK	N/A	N/A	N/A	N/A	N/A		
*CAPRI	N/A	N/A	N/A	N/A			
*CHARCOAL BLUE	N/A	N/A	N/A	N/A	N/A		
*DUSK	N/A	N/A	N/A	N/A			
*EVERGREEN FOG	N/A	N/A	N/A	N/A			
*FOG	N/A	N/A	N/A	N/A			
*FOXHALL GREEN	N/A	N/A	N/A	N/A			
*FROST	N/A	N/A	N/A	N/A			
*IVORY	N/A	N/A	N/A	N/A			
*OYSTER	N/A	N/A	N/A	N/A			
*SHOJI WHITE	N/A	N/A	N/A	N/A			
*SMOKY BLUE	N/A	N/A	N/A	N/A			
*TAUPE	N/A	N/A	N/A	N/A			
*WHITE	N/A	N/A	N/A	N/A			

***See Page 4 for upcharges**



LIBERTY DRAWER FRONT SHOWN WITH HORIZONTAL GRAIN

MADISON15 DOOR STYLE



USE PRICE COLUMN "G"

AVAILABLE IN STD OR MOD FULL OVERLAY
MORE INFORMATION ON PAGES 10 & 11

AVAILABLE IN MOLDED
3/8" SOLID RAISED BEADED PANEL
2 1/2" SHAKER STILES & RAILS

AVAILABLE WITH 5 PC DRAWER FRONTS
3/8" SOLID REVERSE RAISED BEADED PANEL
2 1/2" STILES & 1 1/2" OR 2 1/2" RAILS

IF DRAWER HEIGHT IS 8 1/4", OR MORE, THE TOP AND BOTTOM RAILS WILL BE 2 1/2" INSTEAD OF 1 1/2"

DOORS TALLER THAN 42" ARE GOING TO BE TWO PANELS WITH A CENTER SPLITTER IN THE MIDDLE - SEE PAGE 27



STAIN OPTIONS	KNOTTY ALDER	BEECH	RUSTIC BEECH	BIRCH	RUSTIC BIRCH	CHERRY	DISTRESS RU-CHERRY	HICKORY	RUSTIC HICKORY	MAPLE	*PAINT GRADE - HD	*PAINT GRADE - MAPLE	WHITE OAK	*RIFT WHITE OAK
NATURAL	D	D	D	N/A	D	D					N/A	N/A	N/A	N/A
UNFINISHED	D	D	D	D	D	D								
WIPING STAINS														
ALMOND	BCDR	BCDR	BCDR	BCDR	BCDR	BCDR	BCR	BCR	BCR	BCR	N/A	N/A	R	
BRIARWOOD	BCDR	BCDR	BCDR	BCDR	BCDR	BCDR	BCR	BCR	BCR	N/A	N/A	N/A	R	
BROWN SEPIA	BCDR	BCDR	BCDR	BCDR	BCDR	BCDR	BCR	BCR	BCR	N/A	N/A	N/A	R	
DRIFTWOOD	BCDR	BCDR	BCDR	BCDR	BCDR	BCDR	BCR	BCR	BCR	N/A	N/A	N/A	R	
PECAN	BCDR	BCDR	BCDR	BCDR	BCDR	BCDR	BCR	BCR	BCR	BCR	N/A	N/A	R	
RUSSET	BCDR	BCDR	BCDR	BCDR	BCDR	BCDR	BCR	BCR	BCR	N/A	N/A	N/A	R	
SAND	DR	DR	DR	N/A	DR	DR	DR	DR	DR	DR	N/A	N/A	R	
SIENNA	BCDR	BCDR	BCDR	BCDR	BCDR	BCDR	BCR	BCR	BCR	BCR	N/A	N/A	R	
*STONE	BCDR	BCDR	BCDR	BCDR	BCDR	BCDR	BCR	BCR	BCR	N/A	N/A	N/A	R	
WHEAT	BCDR	BCDR	BCDR	N/A	BCDR	BCDR	BCR	BCR	BCR	BCR	N/A	N/A	R	
SPRAY NO WIPE STAINS														
CASHEW	N/A	N/A	N/A		N/A	N/A	N/A	N/A	N/A		N/A	N/A	N/A	N/A
HAZEL	N/A	N/A	N/A		N/A	N/A	N/A	N/A	N/A		N/A	N/A	N/A	N/A
NUTMEG	N/A	N/A	N/A		N/A	N/A	N/A	N/A	N/A		N/A	N/A	N/A	N/A
PEBBLE	N/A	N/A	N/A		N/A	N/A	N/A	N/A	N/A		N/A	N/A	N/A	N/A
RYE	N/A	N/A	N/A	N/A	N/A	N/A	N/A	N/A	N/A		N/A	N/A	N/A	N/A
DYE STAINS														
*CHESTNUT	BCDR	BCDR	BCDR	BCDR	BCDR	BCDR	BCR	BCR	BCR	N/A	N/A	N/A	N/A	N/A
*FRONTIER	BCDR	BCDR	BCDR	BCDR	BCDR	BCDR	BCR	N/A	N/A	BCR	N/A	N/A	N/A	N/A
*MOCHA	BCDR	BCDR	BCDR	BCDR	BCDR	BCDR	BCR	N/A	N/A	N/A	N/A	N/A	N/A	N/A
ANTIQUE STAIN														
*CAPRI DRIFT	N/A	N/A	N/A	N/A	N/A	N/A	N/A	N/A	N/A	N/A	N/A	N/A	DR	N/A
*DUSK DRIFT	N/A	N/A	N/A	N/A	N/A	N/A	N/A	N/A	N/A	N/A	N/A	N/A	DR	N/A
*FOG DRIFT	N/A	N/A	N/A	N/A	N/A	N/A	N/A	N/A	N/A	N/A	N/A	N/A	DR	N/A
*WHITE DRIFT	N/A	N/A	N/A	N/A	N/A	N/A	N/A	N/A	N/A	N/A	N/A	N/A	DR	N/A
PAINTS														
*ACCESSIBLE BEIGE	DERSU	DERSU	DERSU	N/A	DERSU	N/A	N/A	N/A	N/A	N/A	ESU	ERSU		
*BLACK	DR	DR	DR	N/A	DR	N/A	R	N/A	N/A	N/A		R		
*CAPRI	DERSU	DERSU	DERSU	N/A	DERSU	N/A	N/A	N/A	N/A	N/A	ESU	ERSU		
*CHARCOAL BLUE	DERS	DERS	DERS	N/A	DERS	N/A	N/A	N/A	N/A	N/A	ES	ERS		
*DUSK	DERSU	DERSU	DERSU	N/A	DERSU	N/A	N/A	N/A	N/A	N/A	ESU	ERSU		
*EVERGREEN FOG				N/A		N/A	N/A	N/A	N/A	N/A				
*FOG	DERSU	DERSU	DERSU	N/A	DERSU	N/A	N/A	N/A	N/A	N/A	ESU	ERSU		
*FOXHALL GREEN	DER	DER	DER	N/A	DER	N/A	N/A	N/A	N/A	N/A	E	ER		
*FROST	DERSU	DERSU	DERSU	N/A	DERSU	N/A	N/A	N/A	N/A	N/A	ESU	ERSU		
*IVORY	DERSU	DERSU	DERSU	N/A	DERSU	N/A	N/A	N/A	N/A	N/A	ESU	ERSU		
*OYSTER	DERSU	DERSU	DERSU	N/A	DERSU	N/A	N/A	N/A	N/A	N/A	ESU	ERSU		
*SHOJI WHITE	DERSU	DERSU	DERSU	N/A	DERSU	N/A	N/A	N/A	N/A	N/A	ESU	ERSU		
*SMOKY BLUE	DER	DER	DER	N/A	DER	N/A	N/A	N/A	N/A	N/A	E	ER		
*TAUPE	DERSU	DERSU	DERSU	N/A	DERSU	N/A	N/A	N/A	N/A	N/A	ESU	ERSU		
*WHITE	DERSU	DERSU	DERSU	N/A	DERSU	N/A	N/A	N/A	N/A	N/A	ESU	ERSU		

C=CHOCOLATE ACCENT GLAZE / B=BLACK ACCENT GLAZE / U=UMBER HIGHLIGHTS / E=EBONY HIGHLIGHTS / S=SMOKE HIGHLIGHTS
R=RUB THRU (ON STILES AND RAILS ONLY) / D=DISTRESS ----- IF OUTSIDE PROFILE IS SHAKER, OUTSIDE EDGE WILL NOT BE GLAZED

***See Page 4 for upcharges**

NORFOLK15 DOOR STYLE



USE PRICE COLUMN "G"

MOD FULL OVERLAY ONLY
FULL OVERLAY UPCHARGE APPLIES
MORE INFORMATION ON PAGE 11

AVAILABLE IN MOLDED
5/8" SOLID RAISED PANEL
3 1/2" SHAKER STILES & RAILS

AVAILABLE WITH 5 PC DRAWER FRONTS
5/8" SOLID RAISED PANEL
3 1/2" STILES & 1 1/2" OR 2 1/2" RAILS

IF DRAWER HEIGHT IS 8 1/4", OR MORE, THE TOP AND BOTTOM RAILS WILL BE 2 1/2" INSTEAD OF 1 1/2"

DOORS TALLER THAN 42" ARE GOING TO BE TWO PANELS WITH A CENTER SPLITTER IN THE MIDDLE - SEE PAGE 27

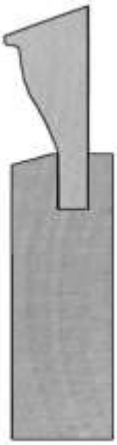

STAIN OPTIONS	KNOTTY ALDER	BEECH	RUSTIC BEECH	BIRCH	RUSTIC BIRCH	CHERRY	DISTRESS RU-CHERRY	HICKORY	RUSTIC HICKORY	MAPLE	*PAINT GRADE - HD	*PAINT GRADE - MAPLE		
NATURAL	D	D	D	N/A	D	D					N/A	N/A		
UNFINISHED	D	D	D	D	D	D								
WIPING STAINS														
ALMOND	BCDR	BCDR	BCDR	BCDR	BCDR	BCDR	BCR	BCR	BCR	BCR	N/A	N/A		
BRIARWOOD	BCDR	BCDR	BCDR	BCDR	BCDR	BCDR	BCR	BCR	BCR	N/A	N/A	N/A		
BROWN SEPIA	BCDR	BCDR	BCDR	BCDR	BCDR	BCDR	BCR	BCR	BCR	N/A	N/A	N/A		
DRIFTWOOD	BCDR	BCDR	BCDR	BCDR	BCDR	BCDR	BCR	BCR	BCR	N/A	N/A	N/A		
PECAN	BCDR	BCDR	BCDR	BCDR	BCDR	BCDR	BCR	BCR	BCR	BCR	N/A	N/A		
RUSSET	BCDR	BCDR	BCDR	BCDR	BCDR	BCDR	BCR	BCR	BCR	N/A	N/A	N/A		
SAND	DR	DR	DR	N/A	DR	DR	DR	DR	DR	DR	N/A	N/A		
SIENNA	BCDR	BCDR	BCDR	BCDR	BCDR	BCDR	BCR	BCR	BCR	BCR	N/A	N/A		
*STONE	BCDR	BCDR	BCDR	BCDR	BCDR	BCDR	BCR	BCR	BCR	N/A	N/A	N/A		
WHEAT	BCDR	BCDR	BCDR	N/A	BCDR	BCDR	BCR	BCR	BCR	BCR	N/A	N/A		
SPRAY NO WIPE STAINS														
CASHEW	N/A	N/A	N/A		N/A	N/A	N/A	N/A	N/A		N/A	N/A		
HAZEL	N/A	N/A	N/A		N/A	N/A	N/A	N/A	N/A		N/A	N/A		
NUTMEG	N/A	N/A	N/A		N/A	N/A	N/A	N/A	N/A		N/A	N/A		
PEBBLE	N/A	N/A	N/A		N/A	N/A	N/A	N/A	N/A		N/A	N/A		
RYE	N/A	N/A	N/A	N/A	N/A	N/A	N/A	N/A	N/A		N/A	N/A		
DYE STAINS														
*CHESTNUT	BCDR	BCDR	BCDR	BCDR	BCDR	BCDR	BCR	BCR	BCR	N/A	N/A	N/A		
*FRONTIER	BCDR	BCDR	BCDR	BCDR	BCDR	BCDR	BCR	N/A	N/A	N/A	N/A	N/A		
*MOCHA	BCDR	BCDR	BCDR	BCDR	BCDR	BCDR	BCR	N/A	N/A	N/A	N/A	N/A		
ANTIQUE STAIN														
*CAPRI DRIFT	N/A	N/A	DR	DR	DR	N/A	N/A	N/A	N/A	N/A	N/A	N/A		
*DUSK DRIFT	N/A	N/A	DR	DR	DR	N/A	N/A	N/A	N/A	N/A	N/A	N/A		
*FOG DRIFT	N/A	N/A	DR	DR	DR	N/A	N/A	N/A	N/A	N/A	N/A	N/A		
*WHITE DRIFT	N/A	N/A	DR	DR	DR	N/A	N/A	N/A	N/A	N/A	N/A	N/A		
PAINTS														
*ACCESSIBLE BEIGE	DERSU	DERSU	DERSU	N/A	DERSU	N/A	N/A	N/A	N/A	N/A	ESU	ERSU		
*BLACK	DR	DR	DR	N/A	DR	N/A	R	N/A	N/A	N/A		R		
*CAPRI	DERSU	DERSU	DERSU	N/A	DERSU	N/A	N/A	N/A	N/A	N/A	ESU	ERSU		
*CHARCOAL BLUE	DERS	DERS	DERS	N/A	DERS	N/A	N/A	N/A	N/A	N/A	ES	ERS		
*DUSK	DERSU	DERSU	DERSU	N/A	DERSU	N/A	N/A	N/A	N/A	N/A	ESU	ERSU		
*EVERGREEN FOG				N/A		N/A	N/A	N/A	N/A	N/A				
*FOG	DERSU	DERSU	DERSU	N/A	DERSU	N/A	N/A	N/A	N/A	N/A	ESU	ERSU		
*FOXHALL GREEN	DER	DER	DER	N/A	DER	N/A	N/A	N/A	N/A	N/A	E	ER		
*FROST	DERSU	DERSU	DERSU	N/A	DERSU	N/A	N/A	N/A	N/A	N/A	ESU	ERSU		
*IVORY	DERSU	DERSU	DERSU	N/A	DERSU	N/A	N/A	N/A	N/A	N/A	ESU	ERSU		
*OYSTER	DERSU	DERSU	DERSU	N/A	DERSU	N/A	N/A	N/A	N/A	N/A	ESU	ERSU		
*SHOJI WHITE	DERSU	DERSU	DERSU	N/A	DERSU	N/A	N/A	N/A	N/A	N/A	ESU	ERSU		
*SMOKY BLUE	DER	DER	DER	N/A	DER	N/A	N/A	N/A	N/A	N/A	E	ER		
*TAUPE	DERSU	DERSU	DERSU	N/A	DERSU	N/A	N/A	N/A	N/A	N/A	ESU	ERSU		
*WHITE	DERSU	DERSU	DERSU	N/A	DERSU	N/A	N/A	N/A	N/A	N/A	ESU	ERSU		

C=CHOCOLATE ACCENT GLAZE / B=BLACK ACCENT GLAZE / U=UMBER HIGHLIGHTS / E=EBONY HIGHLIGHTS / S=SMOKE HIGHLIGHTS
R=RUB THRU (ON STILES AND RAILS ONLY) / D=DISTRESS ----- IF OUTSIDE PROFILE IS SHAKER, OUTSIDE EDGE WILL NOT BE GLAZED

***See Page 4 for upcharges**

ORLEANS DOOR STYLE



USE PRICE COLUMN "G"

AVAILABLE IN STD OR MOD FULL OVERLAY
MORE INFORMATION ON PAGES 10 & 11

AVAILABLE IN MOLDED
3/8" SOLID RAISED BEADED PANEL
2 1/2" STILES & RAILS

AVAILABLE WITH 5 PC DRAWER FRONTS
3/8" SOLID REVERSE RAISED BEADED PANEL
2 1/2" STILES & 1 1/2" OR 2 1/2" RAILS

IF DRAWER HEIGHT IS 8 1/4", OR MORE, THE TOP AND BOTTOM RAILS WILL BE 2 1/2" INSTEAD OF 1 1/2"

DOORS TALLER THAN 42" ARE GOING TO BE TWO PANELS WITH A CENTER SPLITTER IN THE MIDDLE - SEE PAGE 27



STAIN OPTIONS	KNOTTY ALDER	BEECH	RUSTIC BEECH	BIRCH	RUSTIC BIRCH	CHERRY	DISTRESS RU-CHERRY	HICKORY	RUSTIC HICKORY	MAPLE	*PAINT GRADE - HD	*PAINT GRADE - MAPLE	WHITE OAK	
NATURAL	D	D	D	N/A	D	D					N/A	N/A	N/A	
UNFINISHED	D	D	D	D	D	D								
WIPING STAINS														
ALMOND	BCDR	BCDR	BCDR	BCDR	BCDR	BCDR	BCR	BCR	BCR	BCR	N/A	N/A	R	
BRIARWOOD	BCDR	BCDR	BCDR	BCDR	BCDR	BCDR	BCR	BCR	BCR	N/A	N/A	N/A	R	
BROWN SEPIA	BCDR	BCDR	BCDR	BCDR	BCDR	BCDR	BCR	BCR	BCR	N/A	N/A	N/A	R	
DRIFTWOOD	BCDR	BCDR	BCDR	BCDR	BCDR	BCDR	BCR	BCR	BCR	N/A	N/A	N/A	R	
PECAN	BCDR	BCDR	BCDR	BCDR	BCDR	BCDR	BCR	BCR	BCR	BCR	N/A	N/A	R	
RUSSET	BCDR	BCDR	BCDR	BCDR	BCDR	BCDR	BCR	N/A	BCR	BCR	N/A	N/A	R	
SAND	DR	DR	DR	N/A	DR	DR	DR	DR	DR	DR	N/A	N/A	R	
SIENNA	BCDR	BCDR	BCDR	BCDR	BCDR	BCDR	BCR	BCR	BCR	BCR	N/A	N/A	R	
*STONE	BCDR	BCDR	BCDR	BCDR	BCDR	BCDR	BCR	BCR	BCR	N/A	N/A	N/A	R	
WHEAT	BCDR	BCDR	BCDR	N/A	BCDR	BCDR	BCR	BCR	BCR	BCR	N/A	N/A	R	
SPRAY NO WIPE STAINS														
CASHEW	N/A	N/A	N/A		N/A	N/A	N/A	N/A	N/A		N/A	N/A	N/A	
HAZEL	N/A	N/A	N/A		N/A	N/A	N/A	N/A	N/A		N/A	N/A	N/A	
NUTMEG	N/A	N/A	N/A		N/A	N/A	N/A	N/A	N/A		N/A	N/A	N/A	
PEBBLE	N/A	N/A	N/A		N/A	N/A	N/A	N/A	N/A		N/A	N/A	N/A	
RYE	N/A	N/A	N/A	N/A	N/A	N/A	N/A	N/A	N/A		N/A	N/A	N/A	
DYE STAINS														
*CHESTNUT	BCDR	BCDR	BCDR	BCDR	BCDR	BCDR	BCR	BCR	BCR	N/A	N/A	N/A	N/A	
*FRONTIER	BCDR	BCDR	BCDR	BCDR	BCDR	BCDR	BCR	N/A	N/A	BCR	N/A	N/A	N/A	
*MOCHA	BCDR	BCDR	BCDR	BCDR	BCDR	BCDR	BCR	N/A	N/A	N/A	N/A	N/A	N/A	
ANTIQUE STAIN														
*CAPRI DRIFT	N/A	N/A	N/A	N/A	N/A	N/A	N/A	N/A	N/A	N/A	N/A	N/A	DR	
*DUSK DRIFT	N/A	N/A	N/A	N/A	N/A	N/A	N/A	N/A	N/A	N/A	N/A	N/A	DR	
*FOG DRIFT	N/A	N/A	N/A	N/A	N/A	N/A	N/A	N/A	N/A	N/A	N/A	N/A	DR	
*WHITE DRIFT	N/A	N/A	N/A	N/A	N/A	N/A	N/A	N/A	N/A	N/A	N/A	N/A	DR	
PAINTS														
*ACCESSIBLE BEIGE	DERSU	DERSU	DERSU	N/A	DERSU	N/A	N/A	N/A	N/A	N/A	ESU	ERSU		
*BLACK	DR	DR	DR	N/A	DR	N/A	R	N/A	N/A	N/A		R		
*CAPRI	DERSU	DERSU	DERSU	N/A	DERSU	N/A	N/A	N/A	N/A	N/A	ESU	ERSU		
*CHARCOAL BLUE	DERS	DERS	DERS	N/A	DERS	N/A	N/A	N/A	N/A	N/A	ES	ERS		
*DUSK	DERSU	DERSU	DERSU	N/A	DERSU	N/A	N/A	N/A	N/A	N/A	ESU	ERSU		
*EVERGREEN FOG				N/A		N/A	N/A	N/A	N/A	N/A				
*FOG	DERSU	DERSU	DERSU	N/A	DERSU	N/A	N/A	N/A	N/A	N/A	ESU	ERSU		
*FOXHALL GREEN	DER	DER	DER	N/A	DER	N/A	N/A	N/A	N/A	N/A	E	ER		
*FROST	DERSU	DERSU	DERSU	N/A	DERSU	N/A	N/A	N/A	N/A	N/A	ESU	ERSU		
*IVORY	DERSU	DERSU	DERSU	N/A	DERSU	N/A	N/A	N/A	N/A	N/A	ESU	ERSU		
*OYSTER	DERSU	DERSU	DERSU	N/A	DERSU	N/A	N/A	N/A	N/A	N/A	ESU	ERSU		
*SHOJI WHITE	DERSU	DERSU	DERSU	N/A	DERSU	N/A	N/A	N/A	N/A	N/A	ESU	ERSU		
*SMOKY BLUE	DER	DER	DER	N/A	DER	N/A	N/A	N/A	N/A	N/A	E	ER		
*TAUPE	DERSU	DERSU	DERSU	N/A	DERSU	N/A	N/A	N/A	N/A	N/A	ESU	ERSU		
*WHITE	DERSU	DERSU	DERSU	N/A	DERSU	N/A	N/A	N/A	N/A	N/A	ESU	ERSU		

C=CHOCOLATE ACCENT GLAZE / B=BLACK ACCENT GLAZE / U=UMBER HIGHLIGHTS / E=EBONY HIGHLIGHTS / S=SMOKE HIGHLIGHTS
R=RUB THRU (ON STILES AND RAILS ONLY) / D=DISTRESS ----- IF OUTSIDE PROFILE IS SHAKER, OUTSIDE EDGE WILL NOT BE GLAZED

***See Page 4 for upcharges**

PLATEAU DOOR STYLE



USE PRICE COLUMN "B"

AVAILABLE IN STD OR MOD FULL OVERLAY
MORE INFORMATION ON PAGES 10 & 11

AVAILABLE IN MOLDED
1/4" FLAT PANEL INSERT
2 1/2" SHAKER STILES & RAILS

AVAILABLE WITH 5 PC DRAWER FRONTS
1/4" FLAT PANEL INSERT
2 1/2" STILES & 1 1/2" OR 2 1/2" RAILS

NOT AVAILABLE WITH MULLION DOORS

IF DRAWER HEIGHT IS 8 1/4", OR MORE, THE TOP AND BOTTOM RAILS WILL BE 2 1/2" INSTEAD OF 1 1/2"

DOORS TALLER THAN 42" ARE GOING TO BE TWO PANELS WITH A CENTER SPLITTER IN THE MIDDLE - SEE PAGE 27



FRONT OF DOOR
WILL BE A
SHALLOW SHAKER

STAIN OPTIONS	KNOTTY ALDER	BEECH	RUSTIC BEECH	BIRCH	RUSTIC BIRCH	CHERRY	HICKORY	MAPLE	*PAINT GRADE - HD	*PAINT GRADE - MAPLE	WHITE OAK	*RIFT WHITE OAK		
NATURAL	D	D	D	N/A	D	N/A			N/A	N/A	N/A	N/A		
UNFINISHED	D	D	D	D	D	D								
WIPING STAINS														
ALMOND	BCDR	BCDR	BCDR	BCDR	BCDR	N/A	BCR	BCR	N/A	N/A	R			
BRIARWOOD	BCDR	BCDR	BCDR	BCDR	BCDR	BCDR	BCR	N/A	N/A	N/A	R			
BROWN SEPIA	BCDR	BCDR	BCDR	BCDR	BCDR	BCDR	BCR	N/A	N/A	N/A	R			
DRIFTWOOD	BCDR	BCDR	BCDR	BCDR	BCDR	BCDR	BCR	N/A	N/A	N/A	R			
PECAN	BCDR	BCDR	BCDR	BCDR	BCDR	N/A	BCR	BCR	N/A	N/A	R			
RUSSET	BCDR	BCDR	BCDR	BCDR	BCDR	BCDR	BCR	N/A	N/A	N/A	R			
SAND	DR	DR	DR	N/A	DR	N/A	DR	DR	N/A	N/A	R			
SIENNA	BCDR	BCDR	BCDR	BCDR	BCDR	N/A	BCR	BCR	N/A	N/A	R			
*STONE	BCDR	BCDR	BCDR	BCDR	BCDR	BCDR	BCR	N/A	N/A	N/A	R			
WHEAT	BCDR	BCDR	BCDR	N/A	BCDR	N/A	BCR	BCR	N/A	N/A	R			
SPRAY NO WIPE STAINS														
CASHEW	N/A	N/A	N/A		N/A	N/A	N/A		N/A	N/A	N/A	N/A		
HAZEL	N/A	N/A	N/A		N/A	N/A	N/A		N/A	N/A	N/A	N/A		
NUTMEG	N/A	N/A	N/A		N/A	N/A	N/A		N/A	N/A	N/A	N/A		
PEBBLE	N/A	N/A	N/A		N/A	N/A	N/A		N/A	N/A	N/A	N/A		
RYE	N/A	N/A	N/A	N/A	N/A	N/A	N/A		N/A	N/A	N/A	N/A		
DYE STAINS														
*CHESTNUT	BCDR	BCDR	BCDR	BCDR	BCDR	BCDR	BCR	N/A	N/A	N/A	N/A	N/A		
*FRONTIER	BCDR	BCDR	BCDR	BCDR	BCDR	BCDR	N/A	BCR	N/A	N/A	N/A	N/A		
*MOCHA	BCDR	BCDR	BCDR	BCDR	BCDR	BCDR	N/A	N/A	N/A	N/A	N/A	N/A		
PAINTS														
*ACCESSIBLE BEIGE	N/A	DERSU	N/A	N/A	N/A	N/A	N/A	N/A	ESU	ERSU				
*BLACK	N/A	DR	N/A	N/A	N/A	N/A	N/A	N/A		R				
*CAPRI	N/A	DERSU	N/A	N/A	N/A	N/A	N/A	N/A	ESU	ERSU				
*CHARCOAL BLUE	N/A	DERS	N/A	N/A	N/A	N/A	N/A	N/A	ES	ERS				
*DUSK	N/A	DERSU	N/A	N/A	N/A	N/A	N/A	N/A	ESU	ERSU				
*EVERGREEN FOG	N/A		N/A	N/A	N/A	N/A	N/A	N/A						
*FOG	N/A	DERSU	N/A	N/A	N/A	N/A	N/A	N/A	ESU	ERSU				
*FOXHALL GREEN	N/A	DER	N/A	N/A	N/A	N/A	N/A	N/A	E	ER				
*FROST	N/A	DERSU	N/A	N/A	N/A	N/A	N/A	N/A	ESU	ERSU				
*IVORY	N/A	DERSU	N/A	N/A	N/A	N/A	N/A	N/A	ESU	ERSU				
*OYSTER	N/A	DERSU	N/A	N/A	N/A	N/A	N/A	N/A	ESU	ERSU				
*SHOJI WHITE	N/A	DERSU	N/A	N/A	N/A	N/A	N/A	N/A	ESU	ERSU				
*SMOKY BLUE	N/A	DER	N/A	N/A	N/A	N/A	N/A	N/A	E	ER				
*TAUPE	N/A	DERSU	N/A	N/A	N/A	N/A	N/A	N/A	ESU	ERSU				
*WHITE	N/A	DERSU	N/A	N/A	N/A	N/A	N/A	N/A	ESU	ERSU				

C=CHOCOLATE ACCENT GLAZE / B=BLACK ACCENT GLAZE / U=UMBER HIGHLIGHTS / E=EBONY HIGHLIGHTS / S=SMOKE HIGHLIGHTS
R=RUB THRU (ON STILES AND RAILS ONLY) / D=DISTRESS ----- IF OUTSIDE PROFILE IS SHAKER, OUTSIDE EDGE WILL NOT BE GLAZED

***See Page 4 for upcharges**

PRAIRIE DOOR STYLE



USE PRICE COLUMN "A"

AVAILABLE IN STD OR MOD FULL OVERLAY
MORE INFORMATION ON PAGES 10 & 11

AVAILABLE IN MOLDED
1/4" FLAT PANEL INSERT
2 1/2" STILES & RAILS

AVAILABLE WITH 5 PC DRAWER FRONTS
1/4" FLAT PANEL INSERT
2 1/2" STILES & 1 1/2" OR 2 1/2" RAILS

IF DRAWER HEIGHT IS 8 1/4", OR MORE, THE TOP AND BOTTOM RAILS WILL BE 2 1/2" INSTEAD OF 1 1/2"

DOORS TALLER THAN 42" ARE GOING TO BE TWO PANELS WITH A CENTER SPLITTER IN THE MIDDLE - SEE PAGE 27



STAIN OPTIONS	KNOTTY ALDER	BEECH	RUSTIC BEECH	BIRCH	RUSTIC BIRCH	CHERRY	HICKORY	MAPLE	*PAINT GRADE - HD	*PAINT GRADE - MAPLE	WHITE OAK	RUSTIC WHITE OAK		
NATURAL	D	D	D	N/A	D	N/A			N/A	N/A	N/A	N/A		
UNFINISHED	D	D	D	D	D	D								
WIPING STAINS														
ALMOND	BCDR	BCDR	BCDR	BCDR	BCDR	N/A	BCR	BCR	N/A	N/A	R	R		
BRIARWOOD	BCDR	BCDR	BCDR	BCDR	BCDR	BCDR	BCR	N/A	N/A	N/A	R	R		
BROWN SEPIA	BCDR	BCDR	BCDR	BCDR	BCDR	BCDR	BCR	N/A	N/A	N/A	R	R		
DRIFTWOOD	BCDR	BCDR	BCDR	BCDR	BCDR	BCDR	BCR	N/A	N/A	N/A	R	R		
PECAN	BCDR	BCDR	BCDR	BCDR	BCDR	N/A	BCR	BCR	N/A	N/A	R	R		
RUSSET	BCDR	BCDR	BCDR	BCDR	BCDR	BCDR	BCR	N/A	N/A	N/A	R	R		
SAND	DR	DR	DR	N/A	DR	N/A	DR	DR	N/A	N/A	R	R		
SIENNA	BCDR	BCDR	BCDR	BCDR	BCDR	N/A	BCR	BCR	N/A	N/A	R	R		
*STONE	BCDR	BCDR	BCDR	BCDR	BCDR	BCDR	BCR	N/A	N/A	N/A	R	R		
WHEAT	BCDR	BCDR	BCDR	N/A	BCDR	N/A	BCR	BCR	N/A	N/A	R	R		
SPRAY NO WIPE STAINS														
CASHEW	N/A	N/A	N/A		N/A	N/A	N/A		N/A	N/A	N/A	N/A		
HAZEL	N/A	N/A	N/A		N/A	N/A	N/A		N/A	N/A	N/A	N/A		
NUTMEG	N/A	N/A	N/A		N/A	N/A	N/A		N/A	N/A	N/A	N/A		
PEBBLE	N/A	N/A	N/A		N/A	N/A	N/A		N/A	N/A	N/A	N/A		
RYE	N/A	N/A	N/A	N/A	N/A	N/A	N/A		N/A	N/A	N/A	N/A		
DYE STAINS														
*CHESTNUT	BCDR	BCDR	BCDR	BCDR	BCDR	BCDR	BCR	N/A	N/A	N/A	N/A	N/A		
*FRONTIER	BCDR	BCDR	BCDR	BCDR	BCDR	BCDR	N/A	BCR	N/A	N/A	N/A	N/A		
*MOCHA	BCDR	BCDR	BCDR	BCDR	BCDR	BCDR	N/A	N/A	N/A	N/A	N/A	N/A		
PAINTS														
*ACCESSIBLE BEIGE	N/A	DERSU	N/A	N/A	N/A	N/A	N/A	N/A	ESU	ERSU				
*BLACK	N/A	DR	N/A	N/A	N/A	N/A	N/A	N/A		R				
*CAPRI	N/A	DERSU	N/A	N/A	N/A	N/A	N/A	N/A	ESU	ERSU				
*CHARCOAL BLUE	N/A	DERS	N/A	N/A	N/A	N/A	N/A	N/A	ES	ERS				
*DUSK	N/A	DERSU	N/A	N/A	N/A	N/A	N/A	N/A	ESU	ERSU				
*EVERGREEN FOG	N/A		N/A	N/A	N/A	N/A	N/A	N/A						
*FOG	N/A	DERSU	N/A	N/A	N/A	N/A	N/A	N/A	ESU	ERSU				
*FOXHALL GREEN	N/A	DER	N/A	N/A	N/A	N/A	N/A	N/A	E	ER				
*FROST	N/A	DERSU	N/A	N/A	N/A	N/A	N/A	N/A	ESU	ERSU				
*IVORY	N/A	DERSU	N/A	N/A	N/A	N/A	N/A	N/A	ESU	ERSU				
*OYSTER	N/A	DERSU	N/A	N/A	N/A	N/A	N/A	N/A	ESU	ERSU				
*SHOJI WHITE	N/A	DERSU	N/A	N/A	N/A	N/A	N/A	N/A	ESU	ERSU				
*SMOKY BLUE	N/A	DER	N/A	N/A	N/A	N/A	N/A	N/A	E	ER				
*TAUPE	N/A	DERSU	N/A	N/A	N/A	N/A	N/A	N/A	ESU	ERSU				
*WHITE	N/A	DERSU	N/A	N/A	N/A	N/A	N/A	N/A	ESU	ERSU				

C=CHOCOLATE ACCENT GLAZE / B=BLACK ACCENT GLAZE / U=UMBER HIGHLIGHTS / E=EBONY HIGHLIGHTS / S=SMOKE HIGHLIGHTS
R=RUB THRU (ON STILES AND RAILS ONLY) / D=DISTRESS ----- IF OUTSIDE PROFILE IS SHAKER, OUTSIDE EDGE WILL NOT BE GLAZED

***See Page 4 for upcharges**

REGENCY MITER DOOR STYLE



USE PRICE COLUMN "D"

AVAILABLE IN STD OR MOD FULL OVERLAY

MORE INFORMATION ON PAGES 10 & 11

NOT AVAILABLE IN MOLDED

5/8" HDF ENGINEERED RAISED PANEL INSERT

2 1/2" STILES & RAILS

AVAILABLE WITH OPEN FRAME DOOR AND STANDARD MULLION ONLY

ANY REGENCY DOOR LESS THAN 10" TALL OR WIDE WILL GO TO FLAT PANEL

ANY REGENCY DRAWER FRONT LESS THAN 9 1/4" TALL WILL GO TO FLAT PANEL



5 PC DRAWER FRONT (NO CHARGE)

1 3/4" STILES & RAILS

5/8" HDF ENGINEERED RAISED PANEL INSERT

1/4" ENGINEERED FLAT PANEL ON DRAWERS UNDER 9 1/4" TALL

INTEGRATED PANELS, WAINSCOT PANELS, AND RAISED END PANELS ARE NOT AVAILABLE IN THIS DOOR STYLE

DOOR STYLE NOT AVAILABLE IN FULL OVERLAY WITH DT-GSM

STAIN OPTIONS	BIRCH									
NATURAL	N/A									
UNFINISHED										
WIPING STAINS										
ALMOND	N/A									
BRIARWOOD	N/A									
BROWN SEPIA	N/A									
DRIFTWOOD	N/A									
PECAN	N/A									
RUSSET	N/A									
SAND	N/A									
SIENNA	N/A									
*STONE	N/A									
WHEAT	N/A									
SPRAY NO WIPE STAINS										
CASHEW	N/A									
HAZEL	N/A									
NUTMEG	N/A									
PEBBLE	N/A									
RYE	N/A									
DYE STAINS										
*CHESTNUT	N/A									
*FRONTIER	N/A									
*MOCHA	N/A									
PAINTS										
*ACCESSIBLE BEIGE	E S U									
*BLACK										
*CAPRI	E S U									
*CHARCOAL BLUE	E S									
*DUSK	E S U									
*EVERGREEN FOG										
*FOG	E S U									
*FOXHALL GREEN	E									
*FROST	E S U									
*IVORY	E S U									
*OYSTER	E S U									
*SHOJI WHITE	E S U									
*SMOKY BLUE	E									
*TAUPE	E S U									
*WHITE	E S U									

U=UMBER HIGHLIGHTS / E=EBONY HIGHLIGHTS / S=SMOKE HIGHLIGHTS

MITER DOOR STYLES HAVE NO OTHER EDGE PROFILE OPTIONS

DOORS TALLER THAN 46" ARE GOING TO BE TWO DOORS ATTACHED TOGETHER. THIS WILL FUNCTION AS A SINGLE DOOR

SEE PAGE 27 FOR MORE DETAILS





DRAWERS OVER 9 1/4" TALL WILL HAVE A RAISED PANEL

***See Page 4 for upcharges**

RIDGEGATE MITER DOOR STYLE



USE PRICE COLUMN "B"

AVAILABLE IN STD OR MOD FULL OVERLAY
MORE INFORMATION ON PAGE 11
NOT AVAILABLE IN MOLDED
1/4" FLAT PANEL INSERT
**1/4" ENGINEERED PANEL INSERT ON BIRCH PAINT

2 1/2" STILES & RAILS

AVAILABLE WITH OPEN FRAME DOOR AND STANDARD MULLION ONLY

INTEGRATED PANELS, WAINSCOT PANELS AND RAISED END PANELS ARE NOT AVAILABLE IN THIS DOOR STYLE

5 PC DRAWER FRONT ONLY (NO CHARGE)
1 3/4" STILES & RAILS
1/4" FLAT PANEL INSERT

DOOR STYLE NOT AVAILABLE IN FULL OVERLAY WITH DT-GSM



STAIN OPTIONS	BIRCH									
NATURAL	N/A									
UNFINISHED										
WIPING STAINS										
ALMOND	B C R									
BRIARWOOD	B C R									
BROWN SEPIA	B C R									
DRIFTWOOD	B C R									
PECAN	B C R									
RUSSET	B C R									
SAND	N/A									
SIENNA	B C R									
*STONE	B C R									
WHEAT	N/A									
SPRAY NO WIPE STAINS										
CASHEW										
HAZEL										
NUTMEG										
PEBBLE										
RYE	N/A									
DYE STAINS										
*CHESTNUT	B C R									
*FRONTIER	B C R									
*MOCHA	B C R									
PAINTS										
*ACCESSIBLE BEIGE	E R S U									
*BLACK	R									
*CAPRI	E R S U									
*CHARCOAL BLUE	E R S									
*DUSK	E R S U									
*EVERGREEN FOG										
*FOG	E R S U									
*FOXHALL GREEN	E R									
*FROST	ER S U									
*IVORY	E R S U									
*OYSTER	E R S U									
*SHOJI WHITE	E R S U									
*SMOKY BLUE	E R									
*TAUPE	E R S U									
*WHITE	E R S U									

C=CHOCOLATE ACCENT GLAZE / B=BLACK ACCENT GLAZE / R=RUB THRU (ON STILES AND RAILS ONLY)
U=UMBER HIGHLIGHTS / E=EBONY HIGHLIGHTS / S=SMOKE HIGHLIGHTS

DOOR STYLES MUST BE CHOSEN FOR BOTH WALL AND BASE CABINETS WHEN ORDERING

MITER DOOR STYLES HAVE NO OTHER EDGE PROFILE OPTIONS

DOORS TALLER THAN 46" ARE GOING TO BE TWO DOORS ATTACHED TOGETHER. THIS WILL FUNCTION AS A SINGLE DOOR
SEE PAGE 27 FOR MORE DETAILS



On VDK in STD overlay it will come with a slab front



**An engineered panel is more resistant to expansion, contracting & cracking

*See Page 4 for upcharges

RIVERTON DOOR STYLE



USE PRICE COLUMN "G"

AVAILABLE IN STD OR MOD FULL OVERLAY
MORE INFORMATION ON PAGES 10 & 11
NOT AVAILABLE IN MOLDED

1 7/8" SHAKER STILES & RAILS

AVAILABLE WITH 5 PC DRAWER FRONTS
1 7/8" SHAKER STILES & RAILS
DRAWER FRONT PANEL WILL RUN VERTICAL TO MATCH DOOR

DOOR STYLE AVAILABLE WITH SHAKER OR 4348 EDGE
DOOR STYLE N/A IN 950 EDGE

DOOR STYLE NOT AVAILABLE IN FULL OVERLAY WITH DT-GSM

INTEGRATED PANELS, WAINSCOT PANELS AND RAISED END PANELS ARE NOT AVAILABLE IN THIS DOOR STYLE

DOORS OVER 20 1/2" WIDE AND 42" TALL WILL BE TWO PANELS

STAIN OPTIONS	*PAINT GRADE - HD	WHITE OAK								
NATURAL	N/A	N/A								
UNFINISHED	N/A									
WIPING STAINS										
ALMOND	N/A									
BRIARWOOD	N/A									
BROWN SEPIA	N/A									
DRIFTWOOD	N/A									
PECAN	N/A									
RUSSET	N/A									
SAND	N/A									
SIENNA	N/A									
*STONE	N/A									
WHEAT	N/A									
SPRAY NO WIPE STAINS										
CASHEW	N/A	N/A								
HAZEL	N/A	N/A								
NUTMEG	N/A	N/A								
PEBBLE	N/A	N/A								
RYE	N/A	N/A								
PAINTS										
*ACCESSIBLE BEIGE										
*BLACK										
*CAPRI										
*CHARCOAL BLUE										
*DUSK										
*EVERGREEN FOG										
*FOG										
*FOXHALL GREEN										
*FROST										
*IVORY										
*OYSTER										
*SHOJI WHITE										
*SMOKY BLUE										
*TAUPE										
*WHITE										

***See Page 4 for upcharges**



SAVANNAH15 DOOR STYLE



USE PRICE COLUMN "A"

AVAILABLE IN STD OR MOD FULL OVERLAY

MORE INFORMATION ON PAGES 10 & 11

AVAILABLE IN MOLDED
1/4" FLAT PANEL INSERT
2 1/2" SHAKER STILES & RAILS

AVAILABLE WITH 5 PC DRAWER FRONTS
1/4" FLAT PANEL INSERT
2 1/2" STILES & 1 1/2" OR 2 1/2" RAILS

IF DRAWER HEIGHT IS 8 1/4", OR MORE, THE TOP AND BOTTOM RAILS WILL BE 2 1/2" INSTEAD OF 1 1/2"

DOORS TALLER THAN 42" ARE GOING TO BE TWO PANELS WITH A CENTER SPLITTER IN THE MIDDLE - SEE PAGE 27



STAIN OPTIONS	KNOTTY ALDER	BEECH	RUSTIC BEECH	BIRCH	RUSTIC BIRCH	CHERRY	HICKORY	MAPLE	*PAINT GRADE - HD	*PAINT GRADE - MAPLE	WHITE OAK	RUSTIC WHITE OAK	*RIFT WHITE OAK	
NATURAL	D	D	D	N/A	D	N/A			N/A	N/A	N/A	N/A	N/A	
UNFINISHED	D	D	D	D	D	D								
WIPING STAINS														
ALMOND	BCDR	BCDR	BCDR	BCDR	BCDR	N/A	BCR	BCR	N/A	N/A	R	R		
BRIARWOOD	BCDR	BCDR	BCDR	BCDR	BCDR	BCDR	BCR	N/A	N/A	N/A	R	R		
BROWN SEPIA	BCDR	BCDR	BCDR	BCDR	BCDR	BCDR	BCR	N/A	N/A	N/A	R	R		
DRIFTWOOD	BCDR	BCDR	BCDR	BCDR	BCDR	BCDR	BCR	N/A	N/A	N/A	R	R		
PECAN	BCDR	BCDR	BCDR	BCDR	BCDR	N/A	BCR	BCR	N/A	N/A	R	R		
RUSSET	BCDR	BCDR	BCDR	BCDR	BCDR	BCDR	BCR	N/A	N/A	N/A	R	R		
SAND	DR	DR	DR	N/A	DR	N/A	DR	DR	N/A	N/A	R	R		
SIENNA	BCDR	BCDR	BCDR	BCDR	BCDR	N/A	BCR	BCR	N/A	N/A	R	R		
*STONE	BCDR	BCDR	BCDR	BCDR	BCDR	BCDR	BCR	N/A	N/A	N/A	R	R		
WHEAT	BCDR	BCDR	BCDR	N/A	BCDR	N/A	BCR	BCR	N/A	N/A	R	R		
SPRAY NO WIPE STAINS														
CASHEW	N/A	N/A	N/A		N/A	N/A	N/A		N/A	N/A	N/A	N/A	N/A	
HAZEL	N/A	N/A	N/A		N/A	N/A	N/A		N/A	N/A	N/A	N/A	N/A	
NUTMEG	N/A	N/A	N/A		N/A	N/A	N/A		N/A	N/A	N/A	N/A	N/A	
PEBBLE	N/A	N/A	N/A		N/A	N/A	N/A		N/A	N/A	N/A	N/A	N/A	
RYE	N/A	N/A	N/A	N/A	N/A	N/A	N/A		N/A	N/A	N/A	N/A	N/A	
DYE STAINS														
*CHESTNUT	BCDR	BCDR	BCDR	BCDR	BCDR	BCDR	BCR	N/A	N/A	N/A	N/A	N/A	N/A	
*FRONTIER	BCDR	BCDR	BCDR	BCDR	BCDR	BCDR	N/A	BCR	N/A	N/A	N/A	N/A	N/A	
*MOCHA	BCDR	BCDR	BCDR	BCDR	BCDR	BCDR	N/A	N/A	N/A	N/A	N/A	N/A	N/A	
PAINTS														
*ACCESSIBLE BEIGE	N/A	DERSU	N/A	N/A	N/A	N/A	N/A	N/A	ESU	ERSU				
*BLACK	N/A	DR	N/A	N/A	N/A	N/A	N/A	N/A		R				
*CAPRI	N/A	DERSU	N/A	N/A	N/A	N/A	N/A	N/A	ESU	ERSU				
*CHARCOAL BLUE	N/A	DERS	N/A	N/A	N/A	N/A	N/A	N/A	ES	ERS				
*DUSK	N/A	DERSU	N/A	N/A	N/A	N/A	N/A	N/A	ESU	ERSU				
*EVERGREEN FOG	N/A		N/A	N/A	N/A	N/A	N/A	N/A						
*FOG	N/A	DERSU	N/A	N/A	N/A	N/A	N/A	N/A	ESU	ERSU				
*FOXHALL GREEN	N/A	DER	N/A	N/A	N/A	N/A	N/A	N/A	E	ER				
*FROST	N/A	DERSU	N/A	N/A	N/A	N/A	N/A	N/A	ESU	ERSU				
*IVORY	N/A	DERSU	N/A	N/A	N/A	N/A	N/A	N/A	ESU	ERSU				
OYSTER	N/A	DERSU	N/A	N/A	N/A	N/A	N/A	N/A	ESU	ERSU				
*SHOJI WHITE	N/A	DERSU	N/A	N/A	N/A	N/A	N/A	N/A	ESU	ERSU				
*SMOKY BLUE	N/A	DER	N/A	N/A	N/A	N/A	N/A	N/A	E	ER				
*TAUPE	N/A	DERSU	N/A	N/A	N/A	N/A	N/A	N/A	ESU	ERSU				
*WHITE	N/A	DERSU	N/A	N/A	N/A	N/A	N/A	N/A	ESU	ERSU				

C=CHOCOLATE ACCENT GLAZE / B=BLACK ACCENT GLAZE / U=UMBER HIGHLIGHTS / E=EBONY HIGHLIGHTS / S=SMOKE HIGHLIGHTS
R=RUB THRU (ON STILES AND RAILS ONLY) / D=DISTRESS ----- IF OUTSIDE PROFILE IS SHAKER, OUTSIDE EDGE WILL NOT BE GLAZED

***See Page 4 for upcharges**

SENECA DOOR STYLE



USE PRICE COLUMN "C"

AVAILABLE IN STD OR MOD FULL OVERLAY
MORE INFORMATION ON PAGES 10 & 11

AVAILABLE IN MOLDED
5/8" SOLID RAISED PANEL
2 1/2" STILES & RAILS

AVAILABLE WITH 5 PC DRAWER FRONTS
5/8" SOLID RAISED PANEL
2 1/2" STILES & 1 1/2" OR 2 1/2" RAILS

IF DRAWER HEIGHT IS 8 1/4", OR MORE, THE TOP AND BOTTOM RAILS WILL BE 2 1/2" INSTEAD OF 1 1/2"

DOORS TALLER THAN 42" ARE GOING TO BE TWO PANELS WITH A CENTER SPLITTER IN THE MIDDLE - SEE PAGE 27



STAIN OPTIONS	KNOTTY ALDER	BEECH	RUSTIC BEECH	BIRCH	RUSTIC BIRCH	CHERRY	DISTRESS RU-CHERRY	HICKORY	RUSTIC HICKORY	MAPLE	*PAINT GRADE - HD	*PAINT GRADE - MAPLE	WHITE OAK	RUSTIC WHITE OAK
NATURAL	D	D	D	N/A	D	D					N/A	N/A	N/A	N/A
UNFINISHED	D	D	D	D	D	D								
WIPING STAINS														
ALMOND	BCDR	BCDR	BCDR	BCDR	BCDR	BCDR	BCR	BCR	BCR	BCR	N/A	N/A	R	R
BRIARWOOD	BCDR	BCDR	BCDR	BCDR	BCDR	BCDR	BCR	BCR	BCR	N/A	N/A	N/A	R	R
BROWN SEPIA	BCDR	BCDR	BCDR	BCDR	BCDR	BCDR	BCR	BCR	BCR	N/A	N/A	N/A	R	R
DRIFTWOOD	BCDR	BCDR	BCDR	BCDR	BCDR	BCDR	BCR	BCR	BCR	N/A	N/A	N/A	R	R
PECAN	BCDR	BCDR	BCDR	BCDR	BCDR	BCDR	BCR	BCR	BCR	BCR	N/A	N/A	R	R
RUSSET	BCDR	BCDR	BCDR	BCDR	BCDR	BCDR	BCR	BCR	BCR	N/A	N/A	N/A	R	R
SAND	DR	DR	DR	N/A	DR	DR	DR	DR	DR	DR	N/A	N/A	R	R
SIENNA	BCDR	BCDR	BCDR	BCDR	BCDR	BCDR	BCR	BCR	BCR	BCR	N/A	N/A	R	R
*STONE	BCDR	BCDR	BCDR	BCDR	BCDR	BCDR	BCR	BCR	BCR	N/A	N/A	N/A	R	R
WHEAT	BCDR	BCDR	BCDR	N/A	BCDR	BCDR	BCR	BCR	BCR	BCR	N/A	N/A	R	R
SPRAY NO WIPE STAINS														
CASHEW	N/A	N/A	N/A		N/A	N/A	N/A	N/A	N/A		N/A	N/A	N/A	N/A
HAZEL	N/A	N/A	N/A		N/A	N/A	N/A	N/A	N/A		N/A	N/A	N/A	N/A
NUTMEG	N/A	N/A	N/A		N/A	N/A	N/A	N/A	N/A		N/A	N/A	N/A	N/A
PEBBLE	N/A	N/A	N/A		N/A	N/A	N/A	N/A	N/A		N/A	N/A	N/A	N/A
RYE	N/A	N/A	N/A	N/A	N/A	N/A	N/A	N/A	N/A		N/A	N/A	N/A	N/A
DYE STAINS														
*CHESTNUT	BCDR	BCDR	BCDR	BCDR	BCDR	BCDR	BCDR	BCR	BCR	N/A	N/A	N/A	N/A	N/A
*FRONTIER	BCDR	BCDR	BCDR	BCDR	BCDR	BCDR	BCDR	N/A	N/A	N/A	N/A	N/A	N/A	N/A
*MOCHA	BCDR	BCDR	BCDR	BCDR	BCDR	BCDR	BCDR	N/A	N/A	N/A	N/A	N/A	N/A	N/A
ANTIQUE STAIN														
*CAPRI DRIFT	N/A	N/A	DR	DR	DR	N/A	N/A	N/A	N/A	N/A	N/A	N/A		
*DUSK DRIFT	N/A	N/A	DR	DR	DR	N/A	N/A	N/A	N/A	N/A	N/A	N/A		
*FOG DRIFT	N/A	N/A	DR	DR	DR	N/A	N/A	N/A	N/A	N/A	N/A	N/A		
*WHITE DRIFT	N/A	N/A	DR	DR	DR	N/A	N/A	N/A	N/A	N/A	N/A	N/A		
PAINTS														
*ACCESSIBLE BEIGE	DERSU	DERSU	DERSU	N/A	DERSU	N/A	N/A	N/A	N/A	N/A	ESU	ERSU		
*BLACK	DR	DR	DR	N/A	DR	N/A	R	N/A	N/A	N/A		R		
*CAPRI	DERSU	DERSU	DERSU	N/A	DERSU	N/A	N/A	N/A	N/A	N/A	ESU	ERSU		
*CHARCOAL BLUE	DERS	DERS	DERS	N/A	DERS	N/A	N/A	N/A	N/A	N/A	ES	ERS		
*DUSK	DERSU	DERSU	DERSU	N/A	DERSU	N/A	N/A	N/A	N/A	N/A	ESU	ERSU		
*EVERGREEN FOG				N/A		N/A	N/A	N/A	N/A	N/A				
*FOG	DERSU	DERSU	DERSU	N/A	DERSU	N/A	N/A	N/A	N/A	N/A	ESU	ERSU		
*FOXHALL GREEN	DER	DER	DER	N/A	DER	N/A	N/A	N/A	N/A	N/A	E	ER		
*FROST	DERSU	DERSU	DERSU	N/A	DERSU	N/A	N/A	N/A	N/A	N/A	ESU	ERSU		
*IVORY	DERSU	DERSU	DERSU	N/A	DERSU	N/A	N/A	N/A	N/A	N/A	ESU	ERSU		
*OYSTER	DERSU	DERSU	DERSU	N/A	DERSU	N/A	N/A	N/A	N/A	N/A	ESU	ERSU		
*SHOJI WHITE	DERSU	DERSU	DERSU	N/A	DERSU	N/A	N/A	N/A	N/A	N/A	ESU	ERSU		
*SMOKY BLUE	DER	DER	DER	N/A	DER	N/A	N/A	N/A	N/A	N/A	E	ER		
*TAUPE	DERSU	DERSU	DERSU	N/A	DERSU	N/A	N/A	N/A	N/A	N/A	ESU	ERSU		
*WHITE	DERSU	DERSU	DERSU	N/A	DERSU	N/A	N/A	N/A	N/A	N/A	ESU	ERSU		

C=CHOCOLATE ACCENT GLAZE / B=BLACK ACCENT GLAZE / U=UMBER HIGHLIGHTS / E=EBONY HIGHLIGHTS / S=SMOKE HIGHLIGHTS
R=RUB THRU (ON STILES AND RAILS ONLY) / D=DISTRESS ----- IF OUTSIDE PROFILE IS SHAKER, OUTSIDE EDGE WILL NOT BE GLAZED

***See Page 4 for upcharges**

SUMMERHILL DOOR STYLE

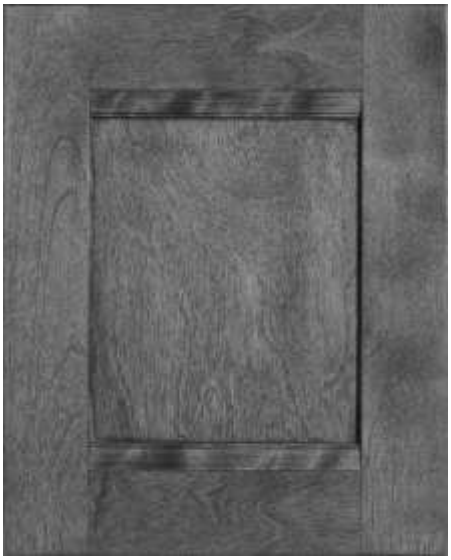

USE PRICE COLUMN "B"

AVAILABLE IN STD OR MOD FULL OVERLAY

AVAILABLE IN MOLDED
1/4" PANEL INSERT
2 1/2" SHAKER STILES & RAILS

NOT AVAILABLE WITH 5 PC DRAWER FRONTS
SLAB DRAWER FRONT ONLY

DOORS TALLER THAN 42" ARE GOING TO BE TWO PANELS WITH A CENTER SPLITTER IN THE MIDDLE - SEE PAGE 27



STAIN OPTIONS	BIRCH	RUSTIC BIRCH	*PAINT GRADE - HD				
NATURAL	N/A	D	N/A				
UNFINISHED	D	D					
WIPING STAINS							
ALMOND	B C D R	B C D R	N/A				
BRIARWOOD	B C D R	B C D R	N/A				
BROWN SEPIA	B C D R	B C D R	N/A				
DRIFTWOOD	B C D R	B C D R	N/A				
PECAN	B C D R	B C D R	N/A				
RUSSET	B C D R	B C D R	N/A				
SAND	N/A	D R	N/A				
SIENNA	B C D R	B C D R	N/A				
*STONE	B C D R	B C D R	N/A				
WHEAT	N/A	B C D R	N/A				
SPRAY NO WIPE STAINS							
CASHEW		N/A	N/A				
HAZEL		N/A	N/A				
NUTMEG		N/A	N/A				
PEBBLE		N/A	N/A				
RYE	N/A	N/A	N/A				
DYE STAINS							
*CHESTNUT	B C D R	B C D R	N/A				
*FRONTIER	B C D R	B C D R	N/A				
*MOCHA	B C D R	B C D R	N/A				
PAINTS							
*ACCESSIBLE BEIGE	N/A	N/A	E S U				
*BLACK	N/A	N/A					
*CAPRI	N/A	N/A	E S U				
*CHARCOAL BLUE	N/A	N/A	E				
*DUSK	N/A	N/A	E S U				
*EVERGREEN FOG	N/A	N/A					
*FOG	N/A	N/A	E S U				
*FOXHALL GREEN	N/A	N/A	E				
*FROST	N/A	N/A	E S U				
*IVORY	N/A	N/A	E S U				
*OYSTER	N/A	N/A	E S U				
*SHOJI WHITE	N/A	N/A	E S U				
*SMOKY BLUE	N/A	N/A	E				
*TAUPE	N/A	N/A	E S U				
*WHITE	N/A	N/A	E S U				

C=CHOCOLATE ACCENT GLAZE / B=BLACK ACCENT GLAZE / U=UMBER HIGHLIGHTS / E=EBONY HIGHLIGHTS / S=SMOKE HIGHLIGHTS
R=RUB THRU (ON STILES AND RAILS ONLY) / D=DISTRESS ----- IF OUTSIDE PROFILE IS SHAKER, OUTSIDE EDGE WILL NOT BE GLAZED

***See Page 4 for upcharges**

VICKSBURG DOOR STYLE



USE PRICE COLUMN "C"

AVAILABLE IN STD OR MOD FULL OVERLAY
MORE INFORMATION ON PAGES 10 & 11

AVAILABLE IN MOLDED
3/8" SOLID REVERSE RAISED PANEL
2 1/2" STILES & RAILS

AVAILABLE WITH 5 PC DRAWER FRONTS
3/8" SOLID REVERSE RAISED PANEL
2 1/2" STILES & 1 1/2" or 2 1/2" RAILS

IF DRAWER HEIGHT IS 8 1/4", OR MORE, THE TOP AND BOTTOM RAILS WILL BE 2 1/2" INSTEAD OF 1 1/2"

DOORS TALLER THAN 42" ARE GOING TO BE TWO PANELS WITH A CENTER SPLITTER IN THE MIDDLE - SEE PAGE 27

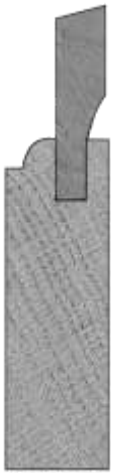

STAIN OPTIONS	KNOTTY ALDER	BEECH	RUSTIC BEECH	BIRCH	RUSTIC BIRCH	CHERRY	DISTRESS RU-CHERRY	HICKORY	RUSTIC HICKORY	MAPLE	*PAINT GRADE - HD	*PAINT GRADE - MAPLE	WHITE OAK	RUSTIC WHITE OAK
NATURAL	D	D	D	N/A	D	D					N/A	N/A	N/A	N/A
UNFINISHED	D	D	D	D	D	D								
WIPING STAINS														
ALMOND	BCDR	BCDR	BCDR	BCDR	BCDR	BCDR	BCR	BCR	BCR	BCR	N/A	N/A	R	R
BRIARWOOD	BCDR	BCDR	BCDR	BCDR	BCDR	BCDR	BCR	BCR	BCR	N/A	N/A	N/A	R	R
BROWN SEPIA	BCDR	BCDR	BCDR	BCDR	BCDR	BCDR	BCR	BCR	BCR	N/A	N/A	N/A	R	R
DRIFTWOOD	BCDR	BCDR	BCDR	BCDR	BCDR	BCDR	BCR	BCR	BCR	N/A	N/A	N/A	R	R
PECAN	BCDR	BCDR	BCDR	BCDR	BCDR	BCDR	BCR	BCR	BCR	BCR	N/A	N/A	R	R
RUSSET	BCDR	BCDR	BCDR	BCDR	BCDR	BCDR	BCR	BCR	BCR	N/A	N/A	N/A	R	R
SAND	DR	DR	DR	N/A	DR	DR	DR	DR	DR	DR	N/A	N/A	R	R
SIENNA	BCDR	BCDR	BCDR	BCDR	BCDR	BCDR	BCR	BCR	BCR	BCR	N/A	N/A	R	R
*STONE	BCDR	BCDR	BCDR	BCDR	BCDR	BCDR	BCR	BCR	BCR	N/A	N/A	N/A	R	R
WHEAT	BCDR	BCDR	BCDR	N/A	BCDR	BCDR	BCR	BCR	BCR	BCR	N/A	N/A	R	R
SPRAY NO WIPE STAINS														
CASHEW	N/A	N/A	N/A		N/A	N/A	N/A	N/A	N/A		N/A	N/A	N/A	N/A
HAZEL	N/A	N/A	N/A		N/A	N/A	N/A	N/A	N/A		N/A	N/A	N/A	N/A
NUTMEG	N/A	N/A	N/A		N/A	N/A	N/A	N/A	N/A		N/A	N/A	N/A	N/A
PEBBLE	N/A	N/A	N/A		N/A	N/A	N/A	N/A	N/A		N/A	N/A	N/A	N/A
RYE	N/A	N/A	N/A	N/A	N/A	N/A	N/A	N/A	N/A		N/A	N/A	N/A	N/A
DYE STAINS														
*CHESTNUT	BCDR	BCDR	BCDR	BCDR	BCDR	BCDR	BCR	BCR	BCR	N/A	N/A	N/A	N/A	N/A
*FRONTIER	BCDR	BCDR	BCDR	BCDR	BCDR	BCDR	BCR	N/A	N/A	BCR	N/A	N/A	N/A	N/A
*MOCHA	BCDR	BCDR	BCDR	BCDR	BCDR	BCDR	BCR	N/A	N/A	N/A	N/A	N/A	N/A	N/A
ANTIQUE STAIN														
*CAPRI DRIFT	N/A	N/A	DR	DR	DR	N/A	N/A	N/A	N/A	N/A	N/A	N/A		
*DUSK DRIFT	N/A	N/A	DR	DR	DR	N/A	N/A	N/A	N/A	N/A	N/A	N/A		
*FOG DRIFT	N/A	N/A	DR	DR	DR	N/A	N/A	N/A	N/A	N/A	N/A	N/A		
*WHITE DRIFT	N/A	N/A	DR	DR	DR	N/A	N/A	N/A	N/A	N/A	N/A	N/A		
PAINTS														
*ACCESSIBLE BEIGE	DERSU	DERSU	DERSU	N/A	DERSU	N/A	N/A	N/A	N/A	N/A	ESU	ERSU		
*BLACK	DR	DR	DR	N/A	DR	N/A	R	N/A	N/A	N/A		R		
*CAPRI	DERSU	DERSU	DERSU	N/A	DERSU	N/A	N/A	N/A	N/A	N/A	ESU	ERSU		
*CHARCOAL BLUE	DERS	DERS	DERS	N/A	DERS	N/A	N/A	N/A	N/A	N/A	ES	ERS		
*DUSK	DERSU	DERSU	DERSU	N/A	DERSU	N/A	N/A	N/A	N/A	N/A	ESU	ERSU		
*EVERGREEN FOG				N/A		N/A	N/A	N/A	N/A	N/A				
*FOG	DERSU	DERSU	DERSU	N/A	DERSU	N/A	N/A	N/A	N/A	N/A	ESU	ERSU		
*FOXHALL GREEN	DER	DER	DER	N/A	DER	N/A	N/A	N/A	N/A	N/A	E	ER		
*FROST	DERSU	DERSU	DERSU	N/A	DERSU	N/A	N/A	N/A	N/A	N/A	ESU	ERSU		
*IVORY	DERSU	DERSU	DERSU	N/A	DERSU	N/A	N/A	N/A	N/A	N/A	ESU	ERSU		
*OYSTER	DERSU	DERSU	DERSU	N/A	DERSU	N/A	N/A	N/A	N/A	N/A	ESU	ERSU		
*SHOJI WHITE	DERSU	DERSU	DERSU	N/A	DERSU	N/A	N/A	N/A	N/A	N/A	ESU	ERSU		
*SMOKY BLUE	DER	DER	DER	N/A	DER	N/A	N/A	N/A	N/A	N/A	E	ER		
*TAUPE	DERSU	DERSU	DERSU	N/A	DERSU	N/A	N/A	N/A	N/A	N/A	ESU	ERSU		
*WHITE	DERSU	DERSU	DERSU	N/A	DERSU	N/A	N/A	N/A	N/A	N/A	ESU	ERSU		

C=CHOCOLATE ACCENT GLAZE / B=BLACK ACCENT GLAZE / U=UMBER HIGHLIGHTS / E=EBONY HIGHLIGHTS / S=SMOKE HIGHLIGHTS
R=RUB THRU (ON STILES AND RAILS ONLY) / D=DISTRESS ----- IF OUTSIDE PROFILE IS SHAKER, OUTSIDE EDGE WILL NOT BE GLAZED

***See Page 4 for upcharges**

DOOR STYLE MODIFICATIONS

DOOR OPTIONS

STANDARD MULLION - PREP FOR GLASS	**MULLION STD-A**	ALL DOORS OF CABINET	405	EA
	**MULLION STD-T**	TOP DOORS OF CABINET	405	EA
	MULLION STD-B	BASE DOORS OF CABINET	405	EA
		FOR DOUBLE SECTION CABINETS		
	MULLION STD-DSA	ALL DOORS OF DS CABINET	405	EA
	MULLION STD-DST	TOP DOORS OF DS CABINET	405	EA
	MULLION STD-DSB	BOTTOM DOORS OF DS CABINET	405	EA
		DOOR MUST BE 10" OR WIDER AND AT LEAST 12" TALL		
		WALL CABINET UNDER 30" - 4 LITE		
		WALL CABINET 30" TO 36" - 6 LITE		
		WALL CABINET OVER 36" TO UNDER 48" TALL - 8 LITE		
		WALL CABINET 48" AND ABOVE WILL HAVE TWO 4 LITES		
		GLASS AND CLIPS NOT INCLUDED		
		LIBERTY DOOR STYLE WILL BE 2 1/2" STILE AND RAIL N/A ON PLATEAU OR RIVERTON DOOR		
PRAIRIE MULLION - PREP FOR GLASS	**MULL-PRAIRIE-A**	ALL DOORS OF CABINET	510	EA
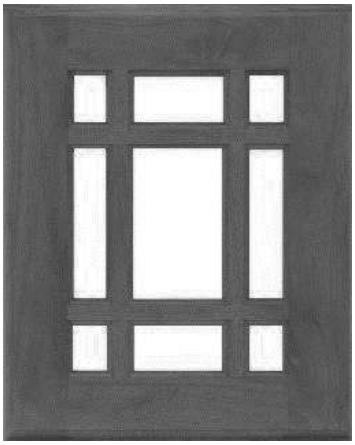	**MULL-PRAIRIE-T**	TOP DOORS OF CABINET	510	EA
	MULL-PRAIRIE-B	BASE DOORS OF CABINET	510	EA
		FOR DOUBLE SECTION CABINETS		
	MULL-PRAIRIE-DSA	ALL DOORS OF DS CABINET	510	EA
	MULL-PRAIRIE-DST	TOP DOORS OF DS CABINET	510	EA
	MULL-PRAIRIE-DSB	BOTTOM DOORS OF DS CABINET	510	EA
		OUTER OPENINGS ACROSS TOP AND BOTTOM ARE 1" W X 1 1/2" T OPENINGS		
		DOOR MUST BE 10" OR WIDER AND AT LEAST 15 1/2" TALL		
		MULLION STICK 1"		
		GLASS AND CLIPS NOT INCLUDED		
		LIBERTY DOOR STYLE WILL BE 2 1/2" STILE AND RAIL N/A ON PLATEAU OR RIVERTON DOOR		
PRINCETON MULLION - PREP FOR GLASS	**MULL-PRINCE-A**	ALL DOORS OF CABINET	510	EA
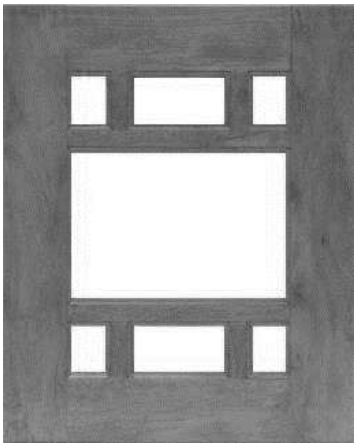	**MULL-PRINCE-T**	TOP DOORS OF CABINET	510	EA
	MULL-PRINCE-B	BASE DOORS OF CABINET	510	EA
		FOR DOUBLE SECTION CABINETS		
	MULL-PRINCE-DSA	ALL DOORS OF DS CABINET	510	EA
	MULL-PRINCE-DST	TOP DOORS OF DS CABINET	510	EA
	MULL-PRINCE-DSB	BOTTOM DOORS OF DS CABINET	510	EA
		OUTER OPENINGS ACROSS TOP AND BOTTOM ARE 1" W X 1 1/2" T OPENINGS		
		DOOR MUST BE 10" OR WIDER AND AT LEAST 15 1/2" TALL		
		MULLION STICK 1"		
		GLASS AND CLIPS NOT INCLUDED		
		LIBERTY DOOR STYLE WILL BE 2 1/2" STILE AND RAIL N/A ON PLATEAU OR RIVERTON DOOR		

DOOR STYLE MODIFICATIONS

DOOR OPTIONS

X MULLION - PREP FOR GLASS	**MULL-X-A**	ALL DOORS OF CABINET	510	EA
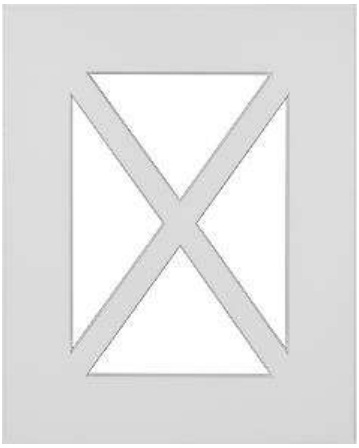	**MULL-X-T**	TOP DOORS OF CABINET	510	EA
	MULL-X-B	BASE DOORS OF CABINET	510	EA
		FOR DOUBLE SECTION CABINETS		
	MULL-X-DSA	ALL DOORS OF DS CABINET	510	EA
	MULL-X-DST	TOP DOORS OF DS CABINET	510	EA
	MULL-X-DSB	BOTTOM DOORS OF DS CABINET	510	EA
		ONLY AVAILABLE IN THE ASPEN15, AUGUSTA15, CENTENNIAL15, CHARLESTON15, HASTINGS15, MADISON15, NORFOLK15 OR SAVANNAH15		
		DOOR MUST BE 10" OR WIDER AND AT LEAST 15 1/2" TALL		
		MULLION STICK 1"		
		GLASS AND CLIPS NOT INCLUDED		
OPEN FRAME DOOR - PREP FOR GLASS	**OPENFRAMEDR-A**	ALL DOORS OF CABINET	0	EA
	**OPENFRAMEDR-T**	TOP DOORS OF CABINET	0	EA
	OPENFRAMEDR-B	BASE DOORS OF CABINET	0	EA
		PLEASE NOTE, FOR OPENFRAMEDR-T MODIFICATION: DOORS TALLER THAN 42" ARE GOING TO BE TWO PANELS WITH A CENTER RAIL. PLEASE SPECIFY IF YOU ONLY WANT TOP SECTION OF THE DOOR PREPPED, OR THE FULL DOOR WITH CENTER RAIL FIXED.		
		FOR DOUBLE SECTION CABINETS		
	OPENFRAMEDR-DSA	ALL DOORS OF CABINET	0	EA
	OPENFRAMEDR-DST	TOP DOORS OF CABINET	0	EA
	OPENFRAMEDR-DSB	BOTTOM DOORS OF CABINET	0	EA
		THE NOTES BELOW APPLY TO ALL OPEN FRAME DOORS		
		NO PANEL		
		GLASS AND CLIPS NOT INCLUDED		
		BEDFORD & GATEWAY DOOR STYLE WILL BE 2 1/2" STILE & RAIL WITH MOLDING APPLIED		
SEE PAGE 27 FOR MORE INFORMATION ON TALL DOORS		LIBERTY DOOR STYLE WILL BE 2 1/2" STILE AND RAIL		
		RIVERTON DOOR STYLE WILL BE 2 1/2" STILE AND RAIL		
MOLDED DOORS	**MOLDED DOOR**		231	EA
		ONLY AVAILABLE IN THESE DOOR STYLES:		
		ASPEN15 - AUGUSTA15 - BRISTOL - CENTENNIAL15 CHARLESTON15 - EASTON - FAIRWAY HASTINGS15 - NORFOLK15 - MADISON15 - ORLEANS PRAIRIE - PLATEAU - SAVANNAH15 - SENECA VICKSBURG - SUMMERHILL		
		MOLDED DOOR IS AVAILABLE FOR THE SPLIT DOORS		

DOOR STYLE MODIFICATIONS

DOOR OPTIONS

70/30 SPLIT DOORS (PER DOOR)



30/70 SPLIT D



70/30 SPLIT D

AVAILABLE ON CABINETS 30" AND TALLER		
70/30 SPLIT D	255	EA
30/70 SPLIT D	255	EA
SPLIT DOOR MOD	375	EA
ADDITIONAL CHARGE TO LINE UP SPLIT PANEL WITH CABINET OF DIFFERENT HEIGHT		
AVAILABLE IN MOLDED		
MULLION OR OPEN FRAME DOORS AVAILABLE UPON REQUEST IN TOP OR BOTTOM		
SEE PAGE 53 AND 54 FOR MULLION PRICES		
SPLIT DOORS NOT AVAILABLE IN MITERED DOOR, BEDFORD, GATEWAY, LIBERTY AND RIVERTON		

30/70 SPLIT DOOR W/OPEN FRAME DOOR (PER DOOR)



30/70 OPENFRAMET

AVAILABLE ON CABINETS 30" AND TALLER		
30/70 OPENFRAMET	255	EA
OPEN FRAME DOOR IN TOP SECTION		
30/70 OPENFRAMEB	255	EA
OPEN FRAME DOOR IN BOTTOM SECTION		
30/70 OPENFRAMEA	375	EA
OPEN FRAME DOOR IN TOP & BOTTOM SECTIONS		
SPLIT DOOR MOD	375	EA
ADDITIONAL CHARGE TO LINE UP SPLIT PANEL WITH CABINET OF DIFFERENT HEIGHT		
SPLIT DOORS NOT AVAILABLE IN MITERED DOOR, BEDFORD, GATEWAY, LIBERTY AND RIVERTON		

DOOR EDGE PROFILES

4348



SHAKER



950



GLAZING AVAILABLE ON EDGE PROFILE 4348 AND 950

NOTES OR ADDITIONS

NOTES OR ADDITIONS

Wall Dimensions

Standard or Refrigerator Wall with One Door or 2 Butt Doors

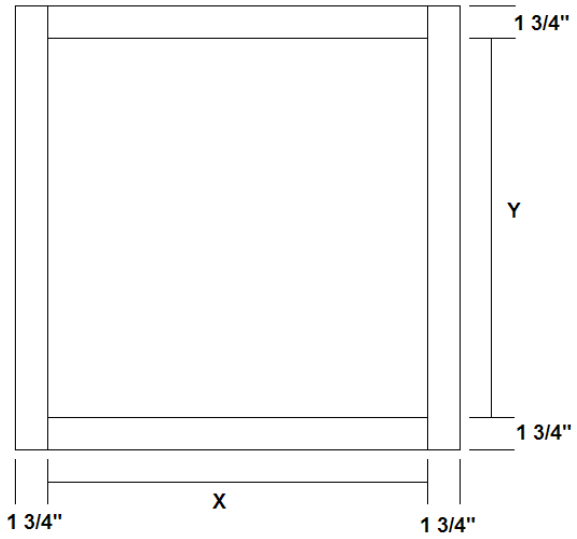

Opening Size Calculation

Cabinet Width - 3.5" = X

Cabinet Height - 3.5" = Y

Standard or Refrigerator Wall with 4 Butt Doors and W48 with Two Doors

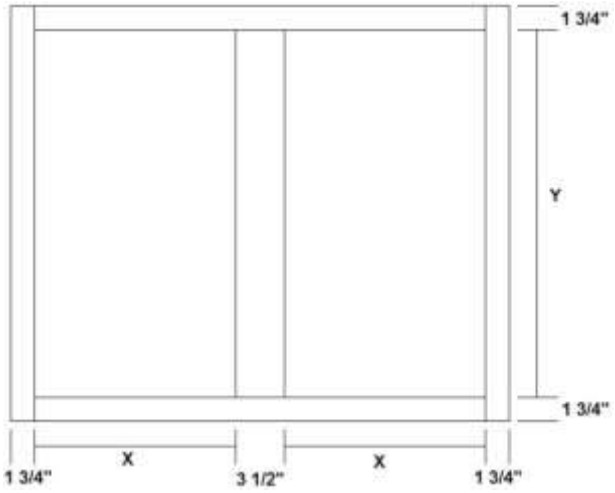

Opening Size Calculation

Cabinet Width - 7" /2 = X

Cabinet Height - 3.5" = Y

Standard Wall with 3 Doors

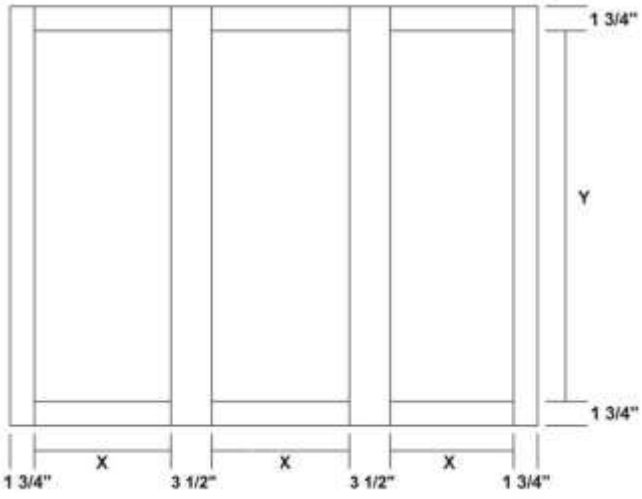

Opening Size Calculation

Cabinet Width - 10.5" /3 = X

Cabinet Height - 3.5" = Y

Wall Blind Corner with 1 Door or 2 Butt Doors

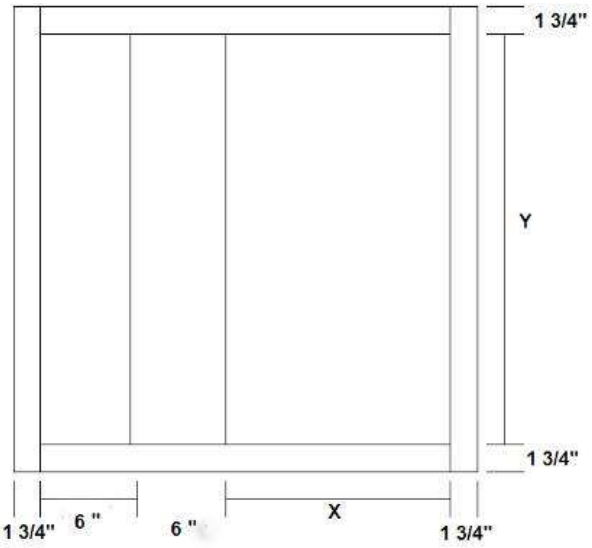

Opening Size Calculation

Cabinet Width -15.5" = X

Cabinet Height - 3.5" = Y

Wall Dimensions

Standard Wall with One Drawer

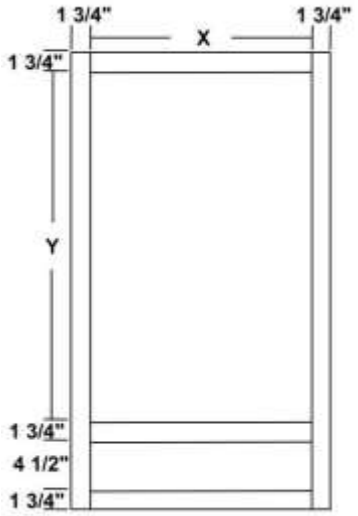

Opening Size Calculation
Cabinet Width: - 3.5" = X
Cabinet Height: - 9.75" = Y

Standard Wall with Two Drawers

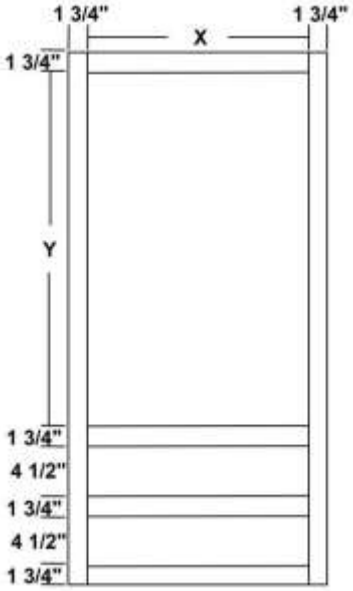

Opening Size Calculation
Cabinet Width: - 3.5" = X
Cabinet Height: - 16" = Y

Standard Wall with Three Drawers

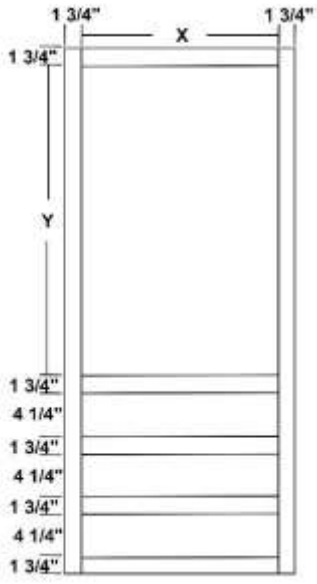

Opening Size Calculation
Cabinet Width: - 3.5" = X
Cabinet Height: - 21.5" = Y

Appliance Garage Cabinets

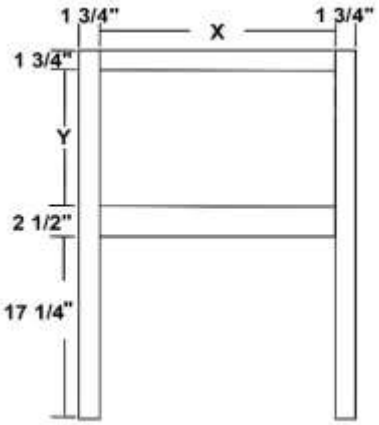

Opening Size Calculation
Cabinet Width - 3.5" = X
Cabinet Height - 21.5 = Y

Wall Dimensions

Built in Microwave Cabinet 30" Tall

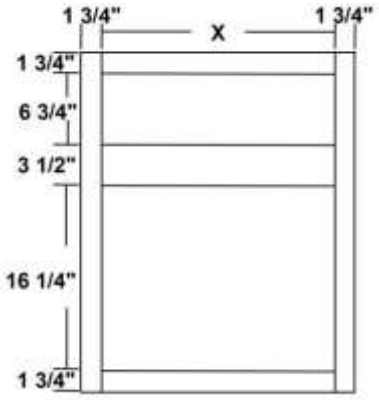

Opening Size Calculation
Cabinet Width - 3.5" = X
Cabinet Height - 30"

Built in Microwave Cabinet 36" Thru 48" Tall

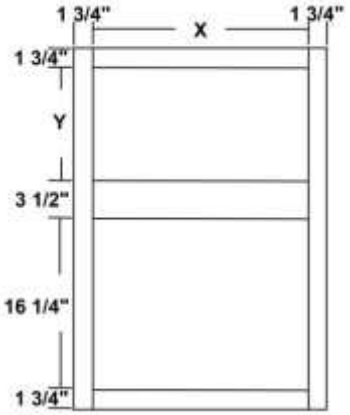

Opening Size Calculation
Cabinet Width - 3.5" = X
Cabinet Height - 23.25" = Y

Wall Microwave & One Drawer W/One or Two Butt Doors

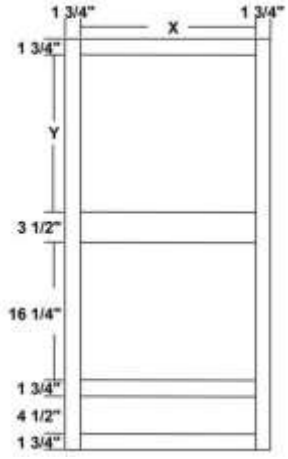

Opening Size Calculation
Cabinet Width - 3.5" = X
Cabinet Height - 29.5" = Y

Wall Microwave

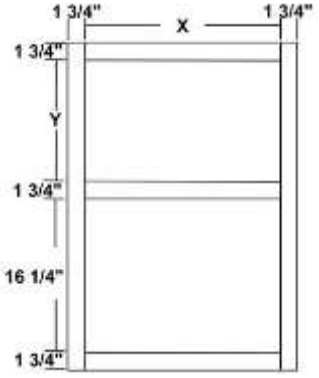

Opening Size Calculation
Cabinet Width - 3.5" = X
Cabinet Height - 21.5" = Y

Corner Wall Dimensions

V Angle Wall - Top View

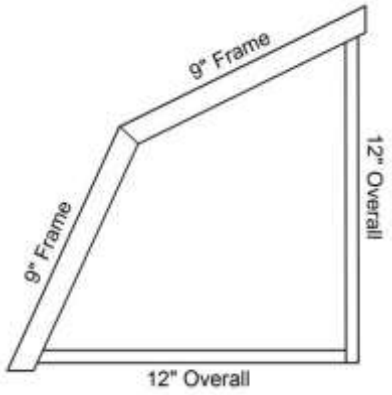

12" & 15" Deep Wall Easy Reach Top View

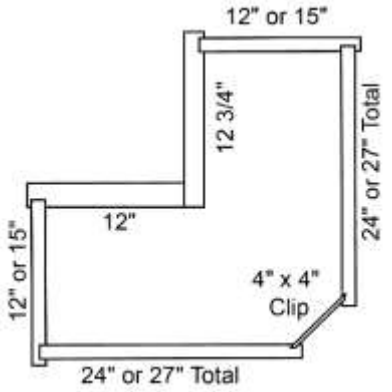

Diagonal Angle 12" Deep - Top View

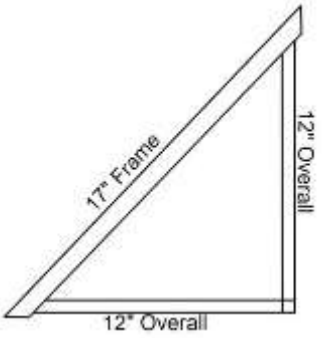

Diagonal Angle 15" Deep - Top View

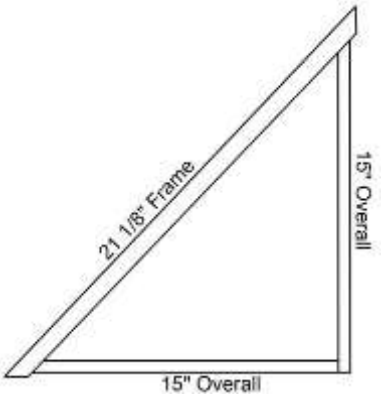

24W - 12" Deep Diagonal Wall Cabinets - Top View

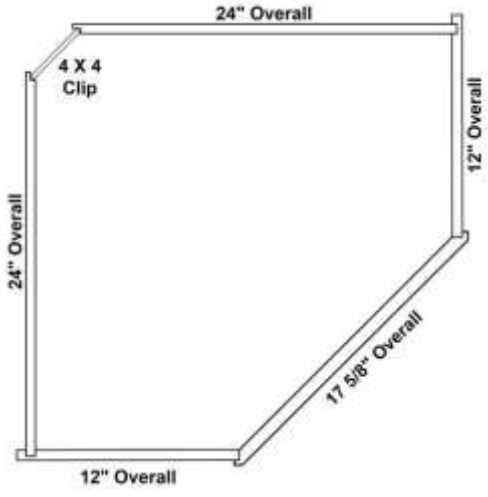

27W - 15" Deep Diagonal Wall Cabinets - Top View

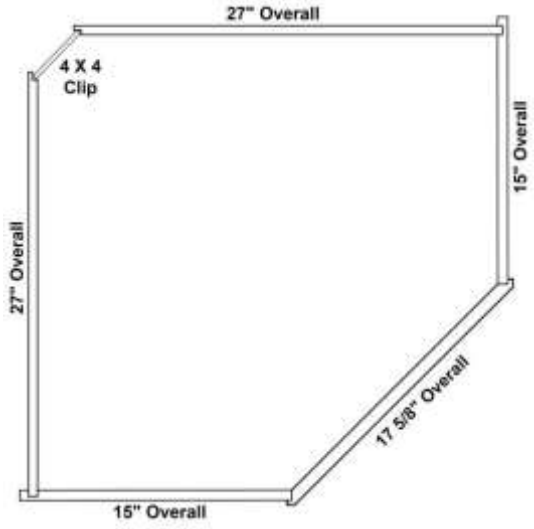

Organizer and Diagonal Corner w/Microwave

Wall Organizer W/Horizontal Opening

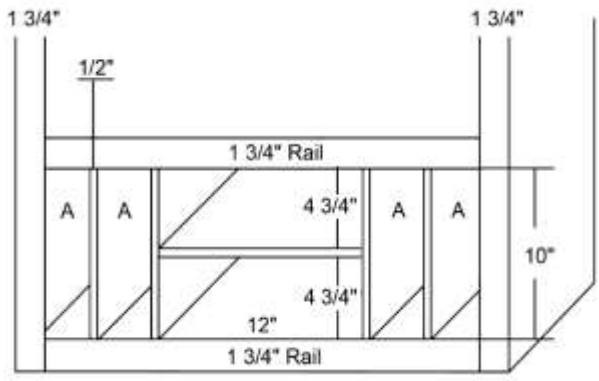

30" WIDE: A= 3 3/8" WIDE

33" WIDE: A= 3 7/8" WIDE

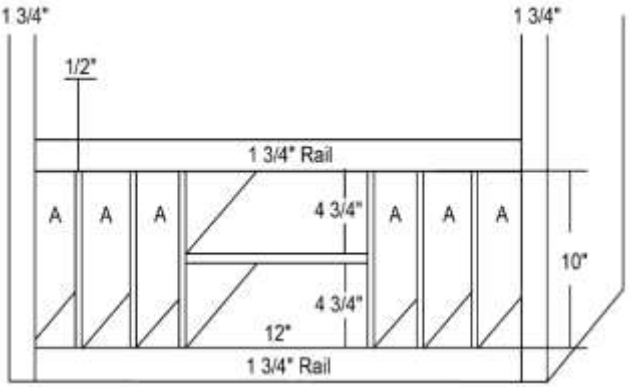

36" WIDE: A= 2 3/4" WIDE

Wall Organizer W/Vertical Opening

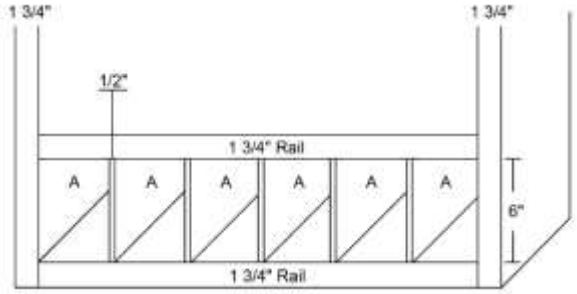

30" WIDE: A= 4" WIDE

33" WIDE: A= 4 1/2" WIDE

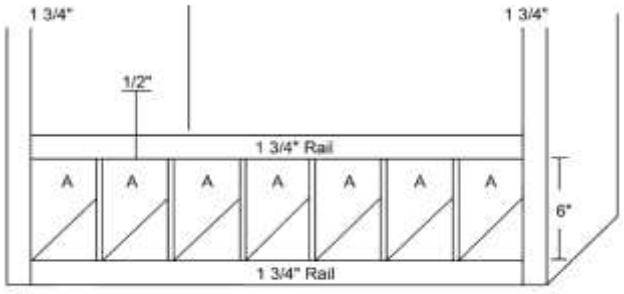

36" WIDE: A= 4 7/32" WIDE

12" Deep Diagonal Wall with Microwave - Top View

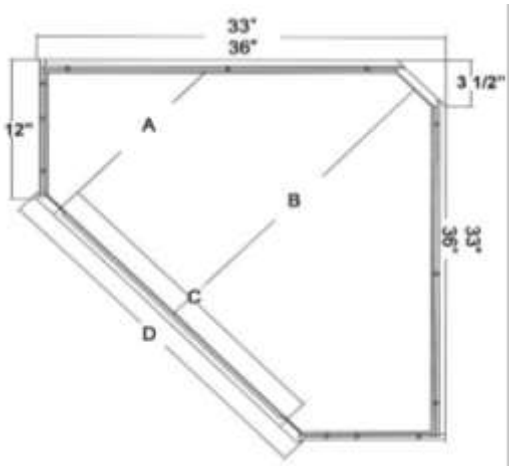

	33" Cabinet		36" Cabinet
A	16 3/4"	A	16 3/4"
B	27 11/16'	B	29 13/16"
C	25 7/8"	C	30 1/16"
D	30 5/16"	D	34 9/16"

15" Deep Diagonal Wall with Microwave - Top View

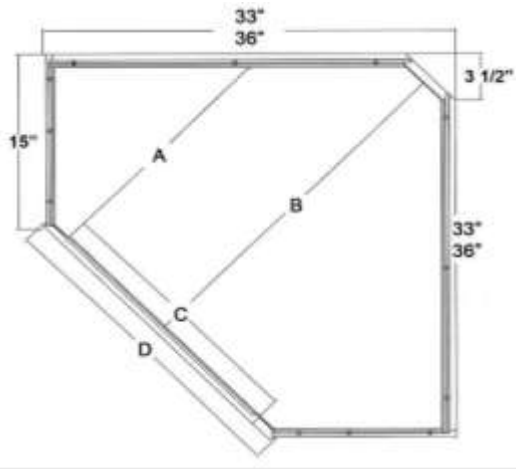

	33" Cabinet		36" Cabinet
A	21"	A	21"
B	29 13/16"	B	31 15/16"
C	21 5/8"	C	25 7/8"
D	26 1/16"	D	30 5/16"

Wall Apothecary

Wall Apothecary 27" thru 30"

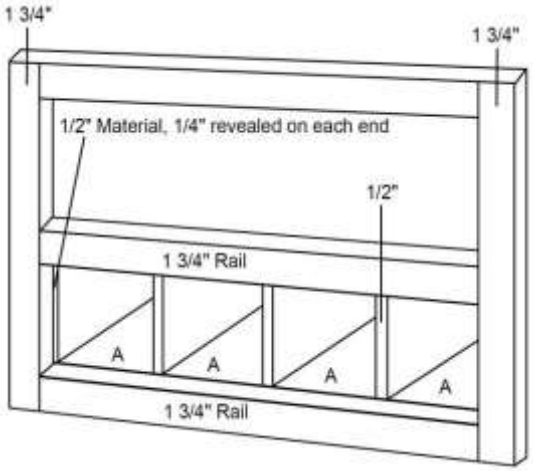

24" WIDE A= 4 5/8" WIDE

27" WIDE A= 5 3/8" WIDE

30" WIDE A= 6 1/8" WIDE

MINIMUM DEPTH IS 10"

Wall Apothecary 33"

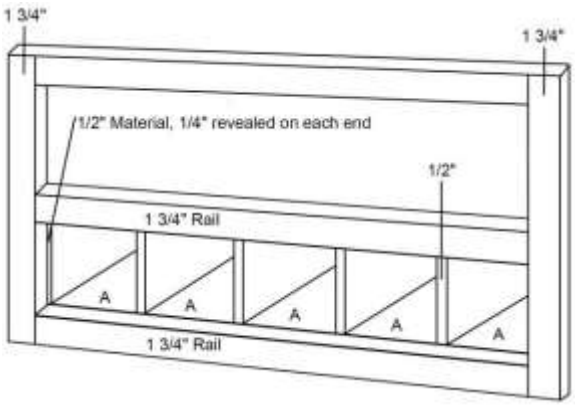

33" WIDE A= 5 3/8" WIDE

MINIMUM DEPTH IS 10"

Wall Apothecary 36"

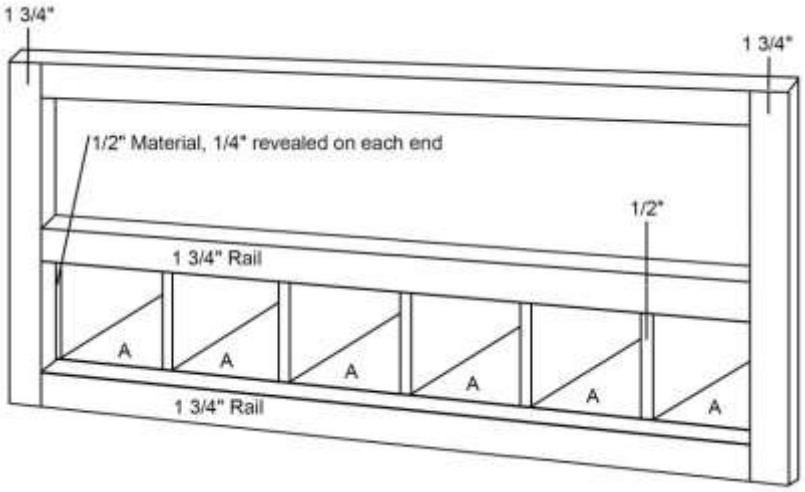

36" WIDE A= 4 7/8" WIDE

APOTHECARY OPENINGS ARE 5 3/4" TALL

MINIMUM DEPTH IS 10"

Wine Cabinet Dimensions

Vertical Wall Wine Cabinet W/Face Frame
6 1/2" Wide X 12" Deep

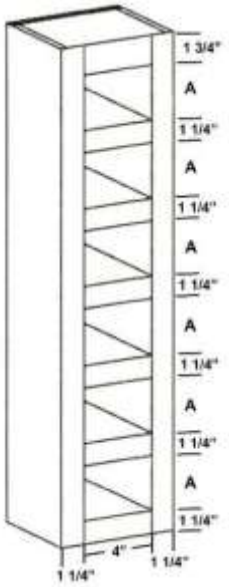

SHOWN - WWFF6.5X36X12V

30" TALL: A= 4.5" TALL - 5 OPENINGS
36" TALL: A= 4.5" TALL - 6 OPENINGS
39" TALL: A= 5" TALL - 6 OPENINGS
42" TALL: A= 4.5" TALL - 7 OPENINGS
48" TALL: A= 5.4" TALL - 7 OPENINGS

Horizontal Wall Wine Cabinet W/Face Frame
6 1/2" Tall X 12" Deep

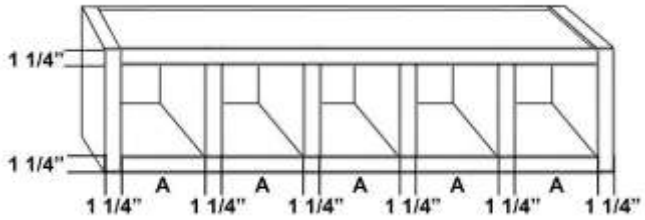

SHOWN - WWFF30X6.5X12H

30" WIDE: A= 4.5" TALL - 5 OPENINGS
36" WIDE: A= 4.5" TALL - 6 OPENINGS
39" WIDE: A= 5" TALL - 6 OPENINGS
42" WIDE: A= 4.5" TALL - 7 OPENINGS
48" WIDE: A= 5.4" TALL - 7 OPENINGS

Vertical Wall Wine Cubbie
FACE FRAME HAS EDGEBANDING
MADE OF 3/4" MATERIAL

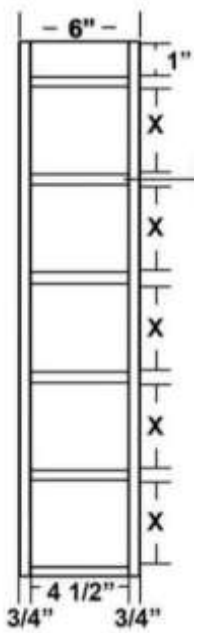

30" TALL: X= 4 7/8" TALL - 5 OPENINGS
36" TALL: X= 5" TALL - 6 OPENINGS
39" TALL: X= 5 1/2" TALL - 6 OPENINGS
42" TALL: X= 5" TALL - 7 OPENINGS
48" TALL: X= 5 7/8" TALL - 7 OPENINGS

Horizontal Wall Wine Cubbie
FACE FRAME HAS EDGEBANDING
TOPS AND BOTTOMS ARE FINISHED BUT NOT EDGEBANDED.
DESIGNED TO FIT BETWEEN TWO CABINETS
MADE OF 3/4" MATERIAL

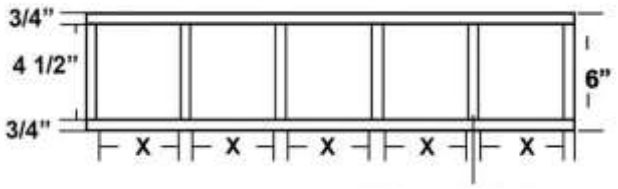

30" WIDE: X= 4 7/8" WIDE - 5 OPENINGS
36" WIDE: X= 5" WIDE - 6 OPENINGS
39" WIDE: X= 5 1/2" WIDE - 6 OPENINGS
42" WIDE: X= 5" WIDE - 7 OPENINGS
48" WIDE: X= 5 7/8" WIDE - 7 OPENINGS

SEE PAGE 54 FOR DOORS AVAILABLE IN MOLDED & PRICING

CABINET TYPE

9", 10", 12" & 14" TALL STANDARD WALL

NO SHELF IN 9", 10", 12", or 14"
9" & 10" IS NOT AVAILABLE IN MITER, OR SUMMERHILL TOP DOORS
9" & 10" N/A IN ASPEN, CENTENNIAL, OR NORFOLK
9" & 10" WILL HAVE ONE WIDE HINGE UP DOOR

NO HINGE STAY MECHANISM IS USED IN 9" OR 10"
N/A LESS THAN 9" TALL

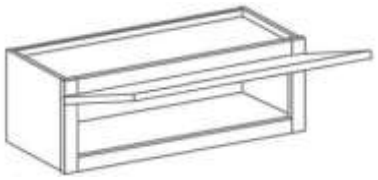

W309

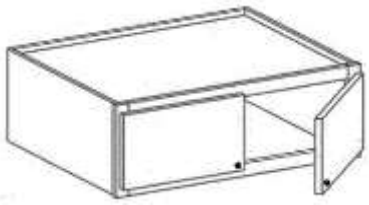

W3012-2B

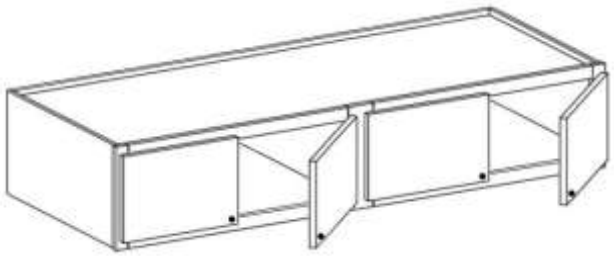

W6012-4B

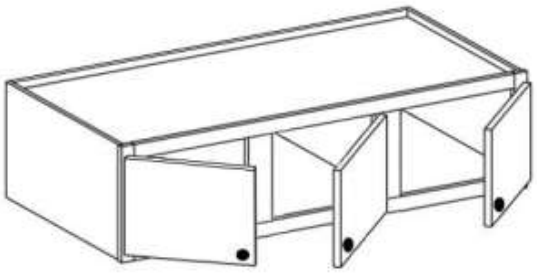

W5112R

R OR L INDICATES HINGE SIDE OF MIDDLE DOOR
ON W51 THRU W60 CABINETS WITH THREE DOORS
OUTSIDE DOORS WILL HINGE TO THE OUTSIDE

WALLS

9" TALL STANDARD WALL

12" DEEP CABINET	List Price						
	A	*B*	*C*	*D*	*E*	*F*	*G*
W309-1DR	528	564	633	N/A	N/A	N/A	789
W339-1DR	588	624	693	N/A	N/A	N/A	849
W369-1DR	648	684	753	N/A	N/A	N/A	909
W379-1DR	756	714	783	N/A	N/A	N/A	939

10" TALL STANDARD WALL

12" DEEP CABINET	List Price						
	A	*B*	*C*	*D*	*E*	*F*	*G*
W3010-1DR	558	594	663	N/A	N/A	N/A	819
W3310-1DR	618	654	723	N/A	N/A	N/A	879
W3610-1DR	678	714	783	N/A	N/A	N/A	939
W3710-1DR	738	774	843	N/A	N/A	N/A	969

12" TALL STANDARD WALL

12" DEEP CABINET	LIST PRICE						
	A	*B*	*C*	*D*	*E*	*F*	*G*
W3012-2B	690	723	801	801	843	888	927
W3312-2B	705	741	825	825	867	912	960
W3612-2B	723	759	852	852	897	942	990
W3712-2B	735	771	864	864	909	954	1002
W3912-2B	744	780	876	876	918	963	1014
W4212-2B	765	801	903	903	945	990	1047
W4512-2B	786	822	927	927	969	1014	1077
W4812-4B	1338	1374	1479	1479	1521	1566	1629
W5112-4B	1440	1476	1581	1581	1623	1668	1731
W5412-4B	1542	1578	1683	1683	1725	1770	1833
W5712-4B	1644	1680	1785	1785	1827	1872	1935
W6012-4B	1746	1782	1887	1887	1929	1974	2037
3 DOOR CABINETS							
W5112L	1167	1203	1308	1308	1350	1395	1458
W5112R	1167	1203	1308	1308	1350	1395	1458
W5412L	1269	1305	1410	1410	1452	1497	1560
W5412R	1269	1305	1410	1410	1452	1497	1560
W5712L	1371	1407	1512	1512	1554	1599	1662
W5712R	1371	1407	1512	1512	1554	1599	1662
W6012L	1473	1509	1614	1614	1656	1701	1764
W6012R	1473	1509	1614	1614	1656	1701	1764

14" TALL STANDARD WALL

12" DEEP CABINET	LIST PRICE						
	A	*B*	*C*	*D*	*E*	*F*	*G*
W3014-2B	720	756	843	843	888	933	993
W3314-2B	741	774	876	876	918	963	1023
W3614-2B	759	795	903	903	945	990	1050
W3714-2B	771	807	915	915	957	1002	1062
W3914-2B	780	816	927	927	969	1014	1074
W4214-2B	801	837	954	954	996	1041	1101
W4514-2B	822	858	978	978	1026	1071	1131
W4814-4B	1428	1464	1569	1569	1611	1656	1719
W5114-4B	1530	1566	1671	1671	1713	1758	1821
W5414-4B	1632	1668	1773	1773	1815	1860	1923
W5714-4B	1734	1770	1875	1875	1917	1962	2025
W6014-4B	1836	1872	1977	1977	2019	2064	2127
3 DOOR CABINETS							
W5114L	1257	1293	1398	1398	1440	1485	1548
W5114R	1257	1293	1398	1398	1440	1485	1548
W5414L	1359	1395	1500	1500	1542	1587	1650
W5414R	1359	1395	1500	1500	1542	1587	1650
W5714L	1461	1497	1602	1602	1644	1689	1752
W5714R	1461	1497	1602	1602	1644	1689	1752
W6014L	1563	1599	1704	1704	1746	1791	1854
W6014R	1563	1599	1704	1704	1746	1791	1854

A-Bristol, Prairie, Savannah15
B-Plateau, Ridgegate, Summerhill
C-Augusta15, Bedford, Charleston15, Easton, Fairway, Gateway, Harbor, Hastings15, Liberty, Seneca, Vicksburg
D-Regency
E-
F-
G-Aspen15, Centennial15, Madison15, Norfolk15, Orleans, Riverton

SEE PAGE 54 FOR DOORS AVAILABLE IN MOLDED & PRICING

CABINET TYPE

15" & 18" TALL STANDARD WALL

NO SHELF IN 15" OR 18" TALL

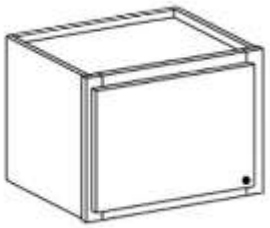

W1818L

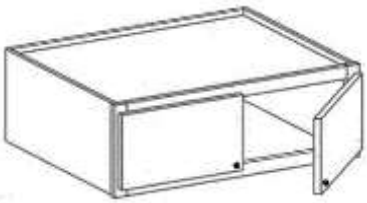

W3015-2B

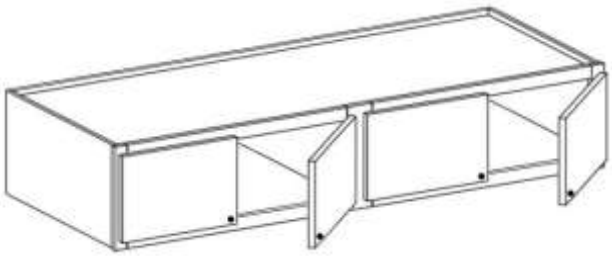

W6015-4B

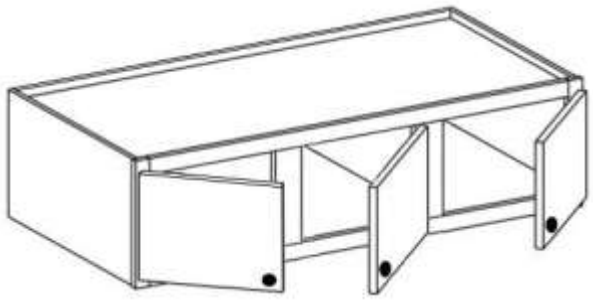

W6015R

R OR L INDICATES HINGE SIDE OF MIDDLE DOOR
ON W51 THRU W60 CABINETS WITH THREE DOORS
OUTSIDE DOORS WILL HINGE TO THE OUTSIDE

WALLS

15" TALL STANDARD WALL

12" DEEP CABINET	LIST PRICE						
	A	*B*	*C*	*D*	*E*	*F*	*G*
W3015-2B	735	771	858	858	903	948	1008
W3315-2B	756	789	891	891	933	978	1038
W3615-2B	774	810	918	918	960	1005	1065
W3715-2B	756	822	930	930	972	1017	1077
W3915-2B	795	831	942	942	984	1029	1089
W4215-2B	816	852	969	969	1011	1056	1116
W4515-2B	837	873	993	993	1041	1086	1146
W4815-2B	983	1019	1055	1055	1133	1178	1241
W4815-4B	1518	1554	1659	1659	1701	1746	1809
W5115-4B	1620	1656	1761	1761	1803	1848	1911
W5415-4B	1722	1758	1863	1863	1905	1950	2013
W5715-4B	1824	1860	1965	1965	2007	2052	2115
W6015-4B	1926	1962	2067	2067	2109	2154	2217
3 DOOR CABINETS							
W5115L	1347	1383	1488	1488	1530	1575	1638
W5115R	1347	1383	1488	1488	1530	1575	1638
W5415L	1449	1485	1590	1590	1632	1677	1740
W5415R	1449	1485	1590	1590	1632	1677	1740
W5715L	1551	1587	1692	1692	1734	1779	1842
W5715R	1551	1587	1692	1692	1734	1779	1842
W6015L	1653	1689	1794	1794	1836	1881	1944
W6015R	1653	1689	1794	1794	1836	1881	1944

18" TALL STANDARD WALL

12" DEEP CABINET	LIST PRICE						
	A	*B*	*C*	*D*	*E*	*F*	*G*
W1818L	468	486	519	519	540	585	627
W1818R	468	486	519	519	540	585	627
W2118L	495	516	552	552	570	615	642
W2118R	495	516	552	552	570	615	642
W2418L	525	540	627	627	648	693	729
W2418R	525	540	627	627	648	693	729
W2418-2B	654	669	756	756	774	819	858
W2718-2B	729	765	861	861	909	954	999
W3018-2B	768	804	891	891	936	981	1041
W3318-2B	789	822	924	924	966	1011	1071
W3618-2B	807	843	951	951	993	1038	1098
W3718-2B	819	855	963	963	1005	1050	1110
W3918-2B	828	864	975	975	1017	1062	1122
W4218-2B	849	885	1002	1002	1044	1089	1149
W4518-2B	870	906	1026	1026	1074	1119	1179
W4818-4B	1608	1644	1749	1749	1791	1836	1899
W5118-4B	1710	1746	1851	1851	1893	1938	2001
W5418-4B	1812	1848	1953	1953	1995	2040	2103
W5718-4B	1914	1950	2055	2055	2097	2142	2205
W6018-4B	2016	2052	2157	2157	2199	2244	2307
3 DOOR CABINETS							
W5118L	1437	1473	1578	1578	1620	1665	1728
W5118R	1437	1473	1578	1578	1620	1665	1728
W5418L	1539	1575	1680	1680	1722	1767	1830
W5418R	1539	1575	1680	1680	1722	1767	1830
W5718L	1641	1677	1782	1782	1824	1869	1932
W5718R	1641	1677	1782	1782	1824	1869	1932
W6018L	1743	1779	1884	1884	1926	1971	2034
W6018R	1743	1779	1884	1884	1926	1971	2034

A-Bristol, Prairie, Savannah15
B-Plateau, Ridgegate, Summerhill
C-Augusta15, Bedford, Charleston15, Easton, Fairway, Gateway, Harbor, Hastings15, Liberty, Seneca, Vicksburg
D-Regency
E-
F-
G-Aspen15, Centennial15, Madison15, Norfolk15, Orleans, Riverton

SEE PAGE 54 FOR DOORS AVAILABLE IN MOLDED & PRICING

CABINET TYPE

21" & 24" TALL STANDARD WALL

NO SHELF IN 21" TALL
ONE ADJUSTABLE SHELF IN 24" TALL

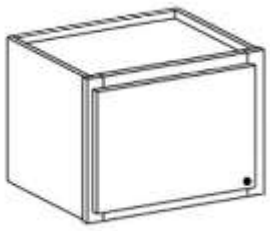

W2121L

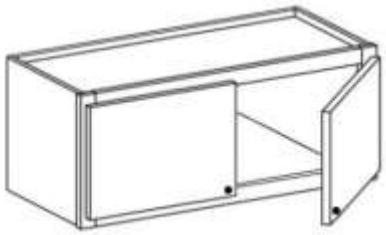

W3021-2B

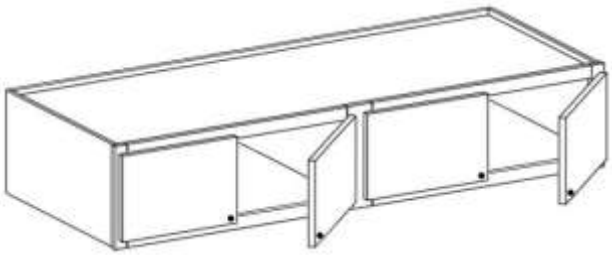

W6021-4B

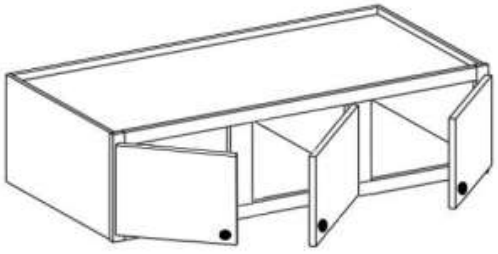

W5121R

R OR L INDICATES HINGE SIDE OF MIDDLE DOOR
ON W51 THRU W60 CABINETS WITH THREE DOORS
OUTSIDE DOORS WILL HINGE TO THE OUTSIDE

WALLS

21" TALL STANDARD WALL

12" DEEP CABINET	LIST PRICE						
	A	*B*	*C*	*D*	*E*	*F*	*G*
W1821L	510	525	627	627	657	702	723
W1821R	510	525	627	627	657	702	723
W2121L	537	552	654	654	684	729	756
W2121R	756	552	654	654	684	729	756
W2421L	567	582	684	684	714	759	801
W2421R	567	582	684	684	714	759	801
W2421-2B	693	708	810	810	840	885	927
W2721-2B	771	801	927	927	957	1002	1062
W3021-2B	795	822	960	960	990	1035	1116
W3321-2B	822	858	996	996	1026	1071	1152
W3621-2B	858	882	1026	1026	1056	1101	1194
W3721-2B	870	894	1038	1038	1068	1113	1206
W3921-2B	882	909	1056	1056	1086	1131	1230
W4221-2B	909	933	1086	1086	1116	1161	1266
W4521-2B	927	960	1122	1122	1152	1197	1305
W4821-4B	1698	1734	1839	1839	1881	1926	1989
W5121-4B	1800	1836	1941	1941	1983	2028	2091
W5421-4B	1902	1938	2043	2043	2085	2130	2193
W5721-4B	2004	2040	2145	2145	2187	2232	2295
W6021-4B	2106	2142	2247	2247	2289	2334	2397
3 DOOR CABINETS							
W5121L	1527	1563	1668	1668	1710	1755	1818
W5121R	1527	1563	1668	1668	1710	1755	1818
W5421L	1629	1665	1770	1770	1812	1857	1920
W5421R	1629	1665	1770	1770	1812	1857	1920
W5721L	1731	1767	1872	1872	1914	1959	2022
W5721R	1731	1767	1872	1872	1914	1959	2022
W6021L	1833	1869	1974	1974	2016	2061	2124
W6021R	1833	1869	1974	1974	2016	2061	2124

24" TALL STANDARD WALL

12" DEEP CABINET	LIST PRICE						
	A	*B*	*C*	*D*	*E*	*F*	*G*
W1824L	552	567	654	654	684	729	789
W1824R	552	567	654	654	684	729	789
W2124L	576	597	693	693	723	768	828
W2124R	576	597	693	693	723	768	828
W2424L	606	621	729	729	759	804	864
W2424R	606	621	729	729	759	804	864
W2424-2B	735	750	858	858	888	933	993
W2724-2B	801	837	990	990	1020	1065	1125
W3024-2B	852	888	1026	1026	1056	1101	1161
W3324-2B	882	918	1065	1065	1095	1140	1200
W3624-2B	909	945	1101	1101	1131	1176	1236
W3724-2B	924	960	1116	1116	1146	1191	1251
W3924-2B	939	975	1149	1149	1179	1224	1284
W4224-2B	963	999	1179	1179	1209	1254	1314
W4524-2B	990	1026	1218	1218	1248	1293	1353
W4824-4B	1788	1824	1929	1929	1971	2016	2079
W5124-4B	1890	1926	2031	2031	2073	2118	2181
W5424-4B	1992	2028	2133	2133	2175	2220	2283
W5724-4B	2094	2130	2235	2235	2277	2322	2385
W6024-4B	2196	2232	2337	2337	2379	2424	2487
3 DOOR CABINETS							
W5124L	1617	1653	1758	1758	1800	1845	1908
W5124R	1617	1653	1758	1758	1800	1845	1908
W5424L	1719	1755	1860	1860	1902	1947	2010
W5424R	1719	1755	1860	1860	1902	1947	2010
W5724L	1821	1857	1962	1962	2004	2049	2112
W5724R	1821	1857	1962	1962	2004	2049	2112
W6024L	1923	1959	2064	2064	2106	2151	2214
W6024R	1923	1959	2064	2064	2106	2151	2214

A-Bristol, Prairie, Savannah15
B-Plateau, Ridgegate, Summerhill
C-Augusta15, Bedford, Charleston15, Easton, Fairway, Gateway, Harbor, Hastings15, Liberty, Seneca, Vicksburg
D-Regency
E-
F-
G-Aspen15, Centennial15, Madison15, Norfolk15, Orleans, Riverton

SEE PAGE 54 FOR DOORS AVAILABLE IN MOLDED & PRICING

CABINET TYPE

27" & 30" TALL STANDARD WALL

ONE ADJUSTABLE SHELF IN 27" TALL
TWO ADJUSTABLE SHELVES IN 30" TALL

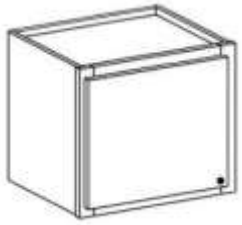

W1827L

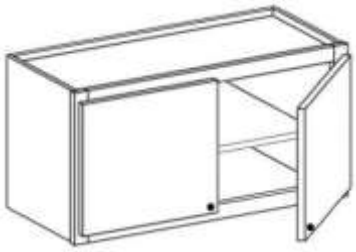

W3027-2B

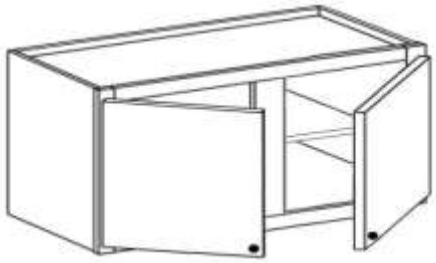

W4827

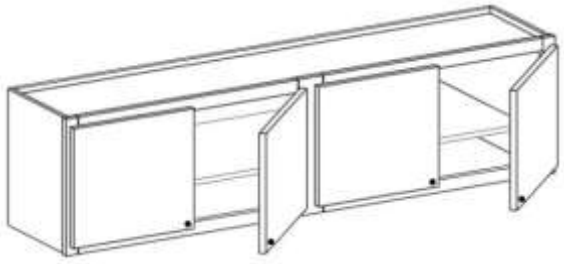

W6027-4B

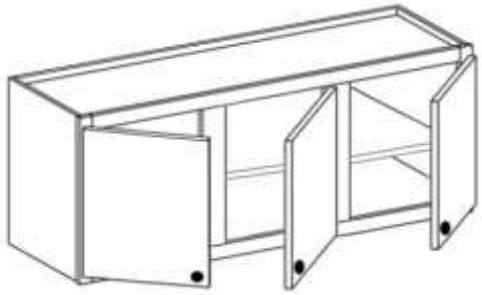

W5127R

R OR L INDICATES HINGE SIDE OF MIDDLE DOOR
ON W51 THRU W60 CABINETS WITH THREE DOORS
OUTSIDE DOORS WILL HINGE TO THE OUTSIDE

WALLS

27" TALL STANDARD WALL

12" DEEP CABINET	LIST PRICE						
	A	*B*	*C*	*D*	*E*	*F*	*G*
W1827L	597	612	714	714	744	789	831
W1827R	597	612	714	714	744	789	831
W2127L	633	648	759	759	789	834	888
W2127R	756	648	759	759	789	834	888
W2427L	669	684	807	807	837	882	945
W2427R	669	684	807	807	837	882	945
W2427-2B	795	810	933	933	963	1008	1071
W2727-2B	912	927	1092	1092	1122	1167	1260
W3027-2B	963	978	1149	1149	1179	1224	1335
W3327-2B	1014	1029	1200	1200	1230	1275	1398
W3627-2B	1065	1080	1239	1239	1269	1314	1443
W3727-2B	1092	1107	1266	1266	1296	1341	1470
W3927-2B	1116	1131	1290	1290	1320	1365	1506
W4227-2B	1167	1182	1341	1341	1371	1416	1572
W4527-2B	1218	1233	1398	1398	1428	1473	1632
W4827	1254	1269	1440	1440	1479	1527	1698
W4827-4B	1878	1914	2019	2019	2061	2106	2169
W5127-4B	1980	2016	2121	2121	2163	2208	2271
W5427-4B	2082	2118	2223	2223	2265	2310	2373
W5727-4B	2184	2220	2325	2325	2367	2412	2475
W6027-4B	2286	2322	2427	2427	2469	2514	2577
3 DOOR CABINETS							
W5127L	1707	1743	1848	1848	1890	1935	1998
W5127R	1707	1743	1848	1848	1890	1935	1998
W5427L	1809	1845	1950	1950	1992	2037	2100
W5427R	1809	1845	1950	1950	1992	2037	2100
W5727L	1911	1947	2052	2052	2094	2139	2202
W5727R	1911	1947	2052	2052	2094	2139	2202
W6027L	2013	2049	2154	2154	2196	2241	2304
W6027R	2013	2049	2154	2154	2196	2241	2304

30" TALL STANDARD WALL

12" DEEP CABINET	LIST PRICE						
	A	*B*	*C*	*D*	*E*	*F*	*G*
W930L	516	531	591	591	612	630	684
W930R	516	531	591	591	612	630	684
W1230L	546	561	639	639	657	678	744
W1230R	546	561	639	639	657	678	744
W1530L	576	591	690	690	705	732	801
W1530R	576	591	690	690	705	732	801
W1830L	612	627	729	729	750	774	852
W1830R	612	627	729	729	750	774	852
W2130L	642	657	774	774	795	828	909
W2130R	642	657	774	774	795	828	909
W2430L	678	693	825	825	846	882	963
W2430R	678	693	825	825	846	882	963
W2430-2B	807	822	954	954	975	1011	1092
W2730-2B	924	960	1086	1086	1131	1158	1266
W3030-2B	954	990	1158	1158	1200	1233	1347
W3330-2B	990	1026	1209	1209	1254	1287	1407
W3630-2B	1020	1056	1251	1251	1290	1329	1455
W3930-2B	1062	1098	1305	1305	1347	1392	1524
W4230-2B	1092	1128	1347	1347	1392	1440	1572
W4530-2B	1128	1164	1404	1404	1443	1494	1638
W4830	1179	1215	1461	1461	1500	1551	1698
W4830-4B	1968	2004	2109	2109	2151	2196	2259
W5130-4B	2070	2106	2211	2211	2253	2298	2361
W5430-4B	2172	2208	2313	2313	2355	2400	2463
W5730-4B	2274	2310	2415	2415	2457	2502	2565
W6030-4B	2376	2412	2517	2517	2559	2604	2667
3 DOOR CABINETS							
W5130L	1797	1833	1938	1938	1980	2025	2088
W5130R	1797	1833	1938	1938	1980	2025	2088
W5430L	1899	1935	2040	2040	2082	2127	2190
W5430R	1899	1935	2040	2040	2082	2127	2190
W5730L	2001	2037	2142	2142	2184	2229	2292
W5730R	2001	2037	2142	2142	2184	2229	2292
W6030L	2103	2139	2244	2244	2286	2331	2394
W6030R	2103	2139	2244	2244	2286	2331	2394

A-Bristol, Prairie, Savannah15
B-Plateau, Ridgegate, Summerhill
C-Augusta15, Bedford, Charleston15, Easton, Fairway, Gateway, Harbor, Hastings15, Liberty, Seneca, Vicksburg
D-Regency
E-
F-
G-Aspen15, Centennial15, Madison15, Norfolk15, Orleans, Riverton

SEE PAGE 54 FOR DOORS AVAILABLE IN MOLDED & PRICING

CABINET TYPE

36" TALL STANDARD WALL

TWO ADJUSTABLE SHELVES IN 36" TALL



W936L

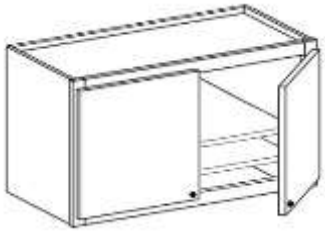

W3036-2B

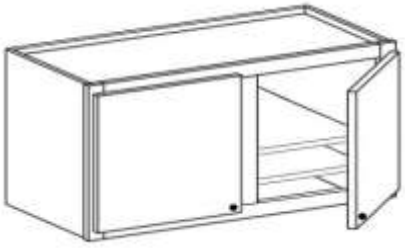

W4836

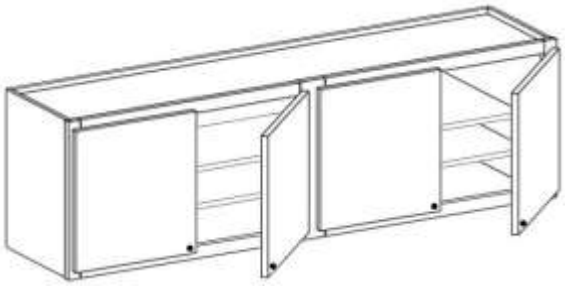

W6036-4B



W6036R

R OR L INDICATES HINGE SIDE OF MIDDLE DOOR
ON W51 THRU W60 CABINETS WITH THREE DOORS
OUTSIDE DOORS WILL HINGE TO THE OUTSIDE

WALLS

36" TALL STANDARD WALL

12" DEEP CABINET	LIST PRICE						
	A	*B*	*C*	*D*	*E*	*F*	*G*
W936L	720	735	807	807	831	861	945
W936R	720	735	807	807	831	861	945
W1236L	756	771	861	861	882	921	1005
W1236R	756	771	861	861	882	921	1005
W1536L	792	807	912	912	939	975	1071
W1536R	792	807	912	912	939	975	1071
W1836L	825	843	969	969	990	1035	1131
W1836R	825	843	969	969	990	1035	1131
W2136L	861	876	1020	1020	1041	1089	1194
W2136R	861	876	1020	1020	1041	1089	1194
W2436L	897	912	1071	1071	1092	1143	1254
W2436R	897	912	1071	1071	1092	1143	1254
W2436-2B	1026	1041	1200	1200	1218	1284	1392
W2736-2B	1164	1179	1398	1398	1419	1524	1632
W3036-2B	1194	1209	1443	1443	1464	1581	1689
W3336-2B	1233	1251	1506	1506	1524	1647	1755
W3636-2B	1269	1284	1551	1551	1572	1704	1812
W3936-2B	1305	1320	1611	1611	1632	1773	1881
W4236-2B	1341	1356	1659	1659	1677	1830	1938
W4536-2B	1377	1392	1719	1719	1740	1902	2010
W4836	1443	1428	1779	1779	1803	1974	2082
W4836-4B	2058	2094	2199	2199	2241	2286	2349
W5136-4B	2160	2196	2301	2301	2343	2388	2451
W5436-4B	2262	2298	2403	2403	2445	2490	2553
W5736-4B	2364	2400	2505	2505	2547	2592	2655
W6036-4B	2466	2502	2607	2607	2649	2694	2757
3 DOOR CABINETS							
W5136L	1887	1923	2028	2028	2070	2115	2178
W5136R	1887	1923	2028	2028	2070	2115	2178
W5436L	1989	2025	2130	2130	2172	2217	2280
W5436R	1989	2025	2130	2130	2172	2217	2280
W5736L	2091	2127	2232	2232	2274	2319	2382
W5736R	2091	2127	2232	2232	2274	2319	2382
W6036L	2193	2229	2334	2334	2376	2421	2484
W6036R	2193	2229	2334	2334	2376	2421	2484

A-Bristol, Prairie, Savannah15
B-Plateau, Ridgegate, Summerhill
C-Augusta15, Bedford, Charleston15, Easton, Fairway, Gateway, Harbor, Hastings15, Liberty, Seneca, Vicksburg
D-Regency
E-
F-
G-Aspen15, Centennial15, Madison15, Norfolk15, Orleans, Riverton

SEE PAGE 54 FOR DOORS AVAILABLE IN MOLDED & PRICING

CABINET TYPE

39" TALL STANDARD WALL

THREE ADJUSTABLE SHELVES IN 39" TALL



W939L



W3039-2B



W4839

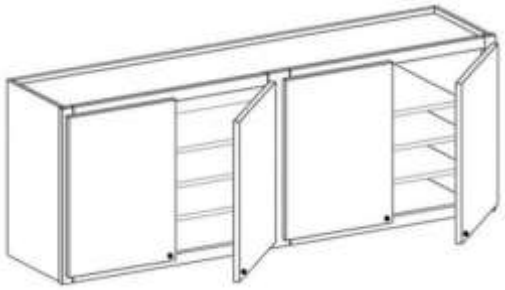

W6039-4B



W5139R

R OR L INDICATES HINGE SIDE OF MIDDLE DOOR
ON W51 THRU W60 CABINETS WITH THREE DOORS
OUTSIDE DOORS WILL HINGE TO THE OUTSIDE

WALLS

39" TALL STANDARD WALL

12" DEEP CABINET	LIST PRICE						
	A	*B*	*C*	*D*	*E*	*F*	*G*
W939L	888	903	990	990	1020	1065	1158
W939R	888	903	990	990	1020	1065	1158
W1239L	927	945	1047	1047	1077	1122	1230
W1239R	927	945	1047	1047	1077	1122	1230
W1539L	969	984	1113	1113	1143	1188	1305
W1539R	969	984	1113	1113	1143	1188	1305
W1839L	1011	1026	1164	1164	1194	1239	1368
W1839R	1011	1026	1164	1164	1194	1239	1368
W2139L	1050	1065	1233	1233	1263	1308	1449
W2139R	1050	1065	1233	1233	1263	1308	1449
W2439L	1092	1107	1305	1305	1335	1380	1536
W2439R	1092	1107	1305	1305	1335	1380	1536
W2439-2B	1218	1233	1434	1434	1464	1509	1662
W2739-2B	1377	1413	1581	1581	1611	1656	1851
W3039-2B	1413	1449	1662	1662	1692	1737	1932
W3339-2B	1458	1494	1719	1719	1749	1794	2010
W3639-2B	1500	1536	1770	1770	1800	1845	2070
W3939-2B	1539	1575	1842	1842	1872	1917	2151
W4239-2B	1632	1668	1893	1893	1923	1968	2214
W4539-2B	1677	1713	1959	1959	1989	2034	2301
W4839	1722	1758	2025	2025	2055	2100	2388
W4839-4B	2148	2184	2289	2289	2331	2376	2439
W5139-4B	2250	2286	2391	2391	2433	2478	2541
W5439-4B	2352	2388	2493	2493	2535	2580	2643
W5739-4B	2454	2490	2595	2595	2637	2682	2745
W6039-4B	2556	2592	2697	2697	2739	2784	2847
3 DOOR CABINETS							
W5139L	1977	2013	2118	2118	2160	2205	2268
W5139R	1977	2013	2118	2118	2160	2205	2268
W5439L	2079	2115	2220	2220	2262	2307	2370
W5439R	2079	2115	2220	2220	2262	2307	2370
W5739L	2181	2217	2322	2322	2364	2409	2472
W5739R	2181	2217	2322	2322	2364	2409	2472
W6039L	2283	2319	2424	2424	2466	2511	2574
W6039R	2283	2319	2424	2424	2466	2511	2574

A-Bristol, Prairie, Savannah15
B-Plateau, Ridgegate, Summerhill
C-Augusta15, Bedford, Charleston15, Easton, Fairway, Gateway, Harbor, Hastings15, Liberty, Seneca, Vicksburg
D-Regency
E-
F-
G-Aspen15, Centennial15, Madison15, Norfolk15, Orleans, Riverton

SEE PAGE 54 FOR DOORS AVAILABLE IN MOLDED & PRICING

CABINET TYPE

42" TALL STANDARD WALL

THREE ADJUSTABLE SHELVES IN 42" TALL

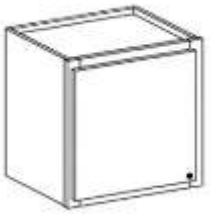

W942L



W3042-2B



W4842

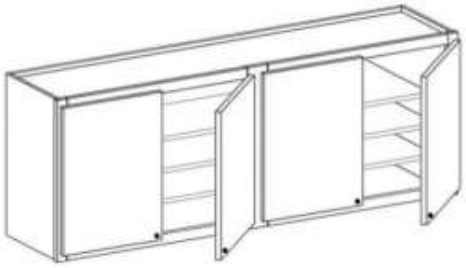

W6042-4B



W5142R

R OR L INDICATES HINGE SIDE OF MIDDLE DOOR
ON W51 THRU W60 CABINETS WITH THREE DOORS
OUTSIDE DOORS WILL HINGE TO THE OUTSIDE

WALLS

42" TALL STANDARD WALL

12" DEEP CABINET	LIST PRICE						
	A	*B*	*C*	*D*	*E*	*F*	*G*
W942L	906	921	1008	1008	1038	1083	1176
W942R	906	921	1008	1008	1038	1083	1176
W1242L	945	963	1065	1065	1095	1140	1248
W1242R	945	963	1065	1065	1095	1140	1248
W1542L	987	1002	1131	1131	1161	1206	1323
W1542R	987	1002	1131	1131	1161	1206	1323
W1842L	1029	1044	1182	1182	1212	1257	1386
W1842R	1029	1044	1182	1182	1212	1257	1386
W2142L	1068	1083	1251	1251	1281	1326	1467
W2142R	1068	1083	1251	1251	1281	1326	1467
W2442L	1110	1125	1323	1323	1353	1398	1554
W2442R	1110	1125	1323	1323	1353	1398	1554
W2442-2B	1236	1251	1452	1452	1482	1527	1680
W2742-2B	1395	1431	1599	1599	1629	1674	1869
W3042-2B	1431	1467	1680	1680	1710	1755	1950
W3342-2B	1476	1512	1737	1737	1767	1812	2028
W3642-2B	1518	1554	1788	1788	1818	1863	2088
W3942-2B	1557	1593	1860	1860	1890	1935	2169
W4242-2B	1650	1686	1911	1911	1941	1986	2232
W4542-2B	1695	1731	1977	1977	2007	2052	2319
W4842	1740	1776	2043	2043	2073	2118	2406
W4842-4B	2238	2274	2379	2379	2421	2466	2529
W5142-4B	2340	2376	2481	2481	2523	2568	2631
W5442-4B	2442	2478	2583	2583	2625	2670	2733
W5742-4B	2544	2580	2685	2685	2727	2772	2835
W6042-4B	2646	2682	2787	2787	2829	2874	2937
3 DOOR CABINETS							
W5142L	2067	2103	2208	2208	2250	2295	2358
W5142R	2067	2103	2208	2208	2250	2295	2358
W5442L	2169	2205	2310	2310	2352	2397	2460
W5442R	2169	2205	2310	2310	2352	2397	2460
W5742L	2271	2307	2412	2412	2454	2499	2562
W5742R	2271	2307	2412	2412	2454	2499	2562
W6042L	2373	2409	2514	2514	2556	2601	2664
W6042R	2373	2409	2514	2514	2556	2601	2664

A-Bristol, Prairie, Savannah15
B-Plateau, Ridgegate, Summerhill
C-Augusta15, Bedford, Charleston15, Easton, Fairway, Gateway, Harbor, Hastings15, Liberty, Seneca, Vicksburg
D-Regency
E-
F-
G-Aspen15, Centennial15, Madison15, Norfolk15, Orleans, Riverton

SEE PAGE 54 FOR DOORS AVAILABLE IN MOLDED & PRICING

CABINET TYPE

48" TALL STANDARD WALL

THREE ADJUSTABLE SHELVES IN 48" TALL
SEE PAGE 25 FOR INFORMATION ON MULTI PANEL DOORS

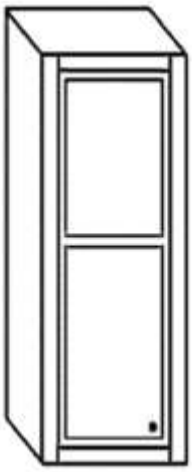

W948L

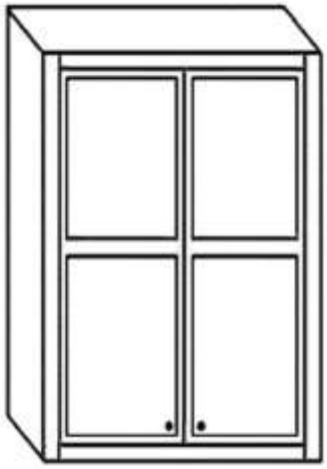

W3648-2B

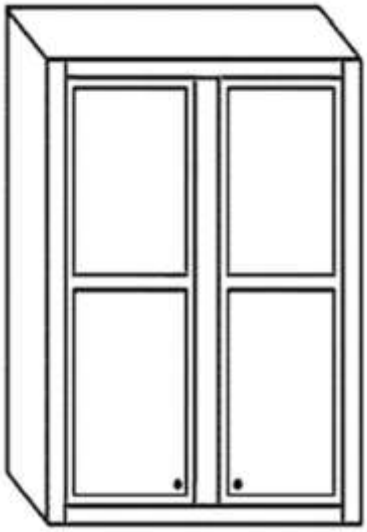

W4848

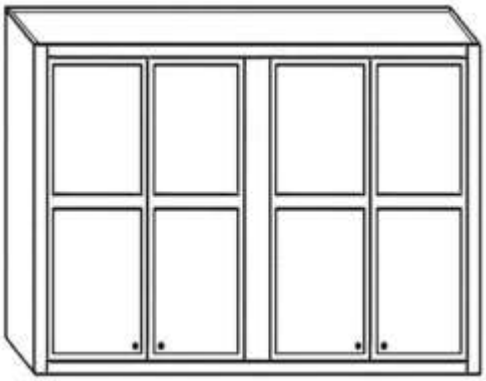

W4848-4B

WALLS

48" TALL STANDARD WALL

12" DEEP CABINET	LIST PRICE						
	A	*B*	*C*	*D*	*E*	*F*	*G*
W948L	1089	1104	1200	1200	1221	1287	1410
W948R	1089	1104	1200	1200	1221	1287	1410
W1248L	1128	1143	1260	1260	1281	1347	1482
W1248R	1128	1143	1260	1260	1281	1347	1482
W1548L	1170	1185	1317	1317	1338	1407	1542
W1548R	1170	1185	1317	1317	1338	1407	1542
W1848L	1209	1227	1380	1380	1401	1470	1614
W1848R	1209	1227	1380	1380	1401	1470	1614
W2148L	1251	1266	1434	1434	1455	1536	1680
W2148R	1251	1266	1434	1434	1455	1536	1680
W2448L	1293	1308	1497	1497	1518	1599	1752
W2448R	1293	1308	1497	1497	1518	1599	1752
W2448-2B	1446	1461	1650	1650	1671	1758	1905
W2748-2B	1686	1701	1890	1890	1911	1992	2175
W3048-2B	1728	1743	1956	1956	1977	2067	2253
W3348-2B	1767	1782	2022	2022	2043	2142	2340
W3648-2B	1809	1824	2079	2079	2100	2211	2415
W3948-2B	1848	1866	2145	2145	2166	2286	2502
W4248-2B	1890	1905	2217	2217	2238	2361	2583
W4548-2B	1932	1947	2289	2289	2310	2436	2661
W4848	1974	1989	2331	2331	2382	2511	2739
W4848-4B	2688	2718	3072	3072	3117	3246	3471

SEE PAGE 54 FOR DOORS AVAILABLE IN MOLDED & PRICING

CABINET TYPE — WALLS

WALL SPICE RACK

TWO 3/4 DEPTH SHELVES IN 30" & 36" TALL
THREE 3/4 DEPTH ADJUSTABLE SHELVES IN 39" & 42" TALL

NO WIDTH MODIFICATIONS ALLOWED



W1830SRL

REV-A-SHELF SPICE RACK DIMENSIONS

4SR-15- 10 1/2" X 21 1/4" X 3 1/8"

4SR-18- 13 1/2" X 21 1/4" X 3 1/8"

4SR-21- 16 1/2" X 21 1/4" X 3 1/8"

HEIGHT BETWEEN SHELVES IS 8 5/8"

INCLUDES REV-A-SHELF 4SR

12" DEEP CABINET	LIST PRICE						
	A	*B*	*C*	*D*	*E*	*F*	*G*
W1530SRL	1104	1119	1221	1221	1236	1266	1338
W1530SRR	1104	1119	1221	1221	1236	1266	1338
W1830SRL	1173	1188	1296	1296	1317	1341	1422
W1830SRR	1173	1188	1296	1296	1317	1341	1422
W2130SRL	1236	1251	1374	1374	1395	1428	1515
W2130SRR	1236	1251	1374	1374	1395	1428	1515
W2430SRL	1272	1290	1428	1428	1449	1485	1572
W2430SRR	1272	1290	1428	1428	1449	1485	1572
W1536SRL	1329	1344	1455	1455	1482	1521	1623
W1536SRR	1356	1344	1455	1455	1482	1521	1623
W1836SRL	1398	1413	1548	1548	1569	1617	1719
W1836SRR	1398	1413	1548	1548	1569	1617	1719
W2136SRL	1467	1482	1632	1632	1653	1704	1815
W2136SRR	1467	1482	1632	1632	1653	1704	1815
W2436SRL	1503	1518	1686	1686	1707	1764	1878
W2436SRR	1503	1518	1686	1686	1707	1764	1878
W1539SRL	1515	1530	1665	1665	1698	1743	1869
W1539SRR	1515	1530	1665	1665	1698	1743	1869
W1839SRL	1590	1605	1749	1749	1782	1830	1965
W1839SRR	1590	1605	1749	1749	1782	1830	1965
W2139SRL	1665	1680	1857	1857	1887	1935	2082
W2139SRR	1665	1680	1857	1857	1887	1935	2082
W2439SRL	1707	1722	1932	1932	1962	2010	2172
W2439SRR	1707	1722	1932	1932	1962	2010	2172
W1542SRL	1533	1551	1683	1683	1716	1764	1887
W1542SRR	1533	1551	1683	1683	1716	1764	1887
W1842SRL	1608	1623	1770	1770	1800	1848	1983
W1842SRR	1608	1623	1770	1770	1800	1848	1983
W2142SRL	1683	1698	1875	1875	1908	1953	2100
W2142SRR	1683	1698	1875	1875	1908	1953	2100
W2442SRL	1725	1743	1950	1950	1983	2028	2190
W2442SRR	1725	1743	1950	1950	1983	2028	2190

WALL SPICE PULLOUT

NO WIDTH OR HEIGHT MODIFICAIONS ALLOWED

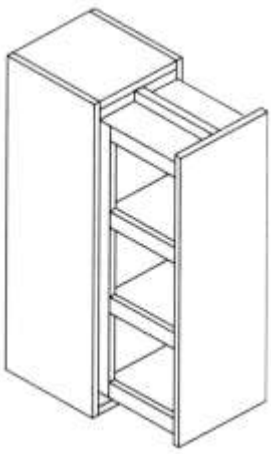



SEE SPICE RACK IN CABINET ORGANIZERS (REV-A-SHELF 448)

INCLUDES REV-A-SHELF SPICE RACK

12" DEEP CABINET	LIST PRICE						
	A	*B*	*C*	*D*	*E*	*F*	*G*
W930SP	1671	1686	1749	1749	1770	1818	1845
W1230SP	1860	1875	1956	1956	1974	2022	2067
W936SP	1884	1899	1974	1974	2001	2049	2121
W1236SP	2079	2094	2190	2190	2211	2259	2340
W939SP	2061	2076	2166	2166	2190	2238	2343
W1239SP	2259	2277	2385	2385	2403	2451	2577
W942SP	2238	2253	2343	2343	2367	2412	2520
W1242SP	2436	2454	2562	2562	2580	2628	2754

SEE PAGE 54 FOR DOORS AVAILABLE IN MOLDED & PRICING

CABINET TYPE — WALLS

WALL RANGE HOOD CABINET

NO SHELVES - IF FINISHED SHELVES ARE NEEDED, SEE PAGE 377

THE CORBELS ARE ATTATCHED TO THE SHELF, THEN SENT SEPARATE FROM THE CABINET

W3630RH INSIDE DIMENSION IS 18.5" X 34.5"
W4230RH INSIDE DIMENSION IS 18.5" X40.5"

TOP OF ARCH TO FLOOR OF CABINET IS 6 1/2"

Shown with Crown molding (not included)





CARPI MISSION CORBEL - 8008



CARPI ACANTHUS CORBEL - 8002

PANEL WILL MATCH THE CABINET DOOR STYLE

W/ARCHED VALANCE AND FINISHED INTERIOR
BOTTOM RAIL 12" TALL
6" CORBEL

19 3/4" DEEP CABINET	LIST PRICE						
	A	*B*	*C*	*D*	*E*	*F*	*G*
WITH CARPI ACANTHUS CORBEL							
W3630RHCC-2B	3852	3882	4152	4152	4182	4302	4827
W4230RHCC-2B	4002	4032	4302	4302	4332	4452	4977
W3636RHCC-2B	4152	4182	4452	4452	4482	4602	5127
W4236RHCC-2B	4302	4332	4602	4602	4632	4752	5277
W3642RHCC-2B	4452	4482	4752	4752	4782	4932	5427
W4242RHCC-2B	4602	4632	4902	4902	4932	5052	5577
WITH CARPI MISSION CORBEL							
W3630RHMC-2B	3852	3882	4152	4152	4182	4302	4827
W4230RHMC-2B	4002	4032	4302	4302	4332	4452	4977
W3636RHMC-2B	4152	4182	4452	4452	4482	4602	5127
W4236RHMC-2B	4302	4332	4602	4602	4632	4752	5277
W3642RHMC-2B	4452	4482	4752	4752	4782	4932	5427
W4242RHMC-2B	4602	4632	4902	4902	4932	5052	5577

WALL RANGE HOOD LINER

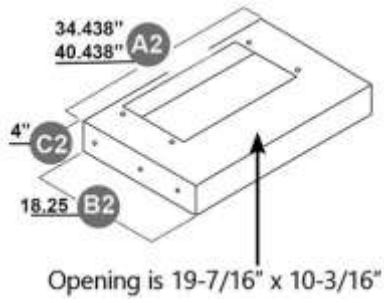

LINERS CAN BE USED WITH THE BROAN BLOWERS

SATIN CHROME

SQUARE LINER	LIST PRICE						
	A	*B*	*C*	*D*	*E*	*F*	*G*
LB36	840	840	840	840	840	840	840
36" Square Liner							
090SB36SM1							
LB42	945	945	945	945	945	945	945
42" Square Liner							
090SB42SM1							

A-Bristol, Prairie, Savannah15
B-Plateau, Ridgegate, Summerhill
C-Augusta15, Bedford, Charleston15, Easton, Fairway, Gateway, Harbor, Hastings15, Liberty, Seneca, Vicksburg
D-Regency
E-
F-
G-Aspen15, Centennial15, Madison15, Norfolk15, Orleans, Riverton

SEE PAGE 54 FOR DOORS AVAILABLE IN MOLDED & PRICING

CABINET TYPE — WALLS

WALL CABINET WITH ARCHED VALANCE BOTTOM RAIL

2 SHELVES IN 30" TO 36" TALL, 3 SHELVES IN 39" AND 42" TALL

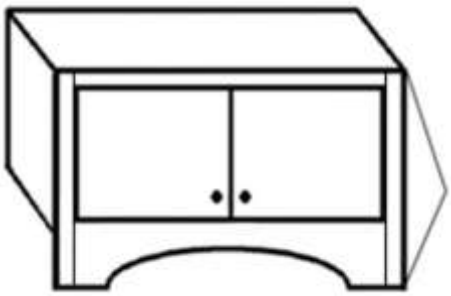

OVERALL HEIGHT

WABR3015-2B

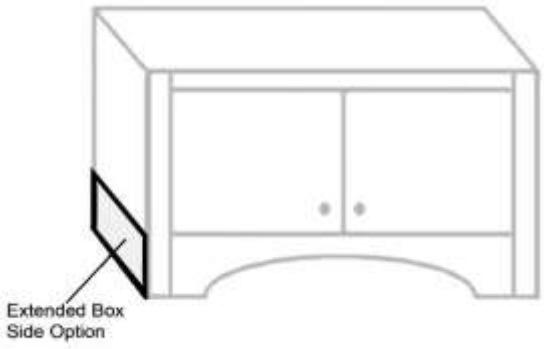

OPTION FOR BOX SIDE TO EXTEND TO BOTTOM OF STILE
HAS AN UP-CHARGE OF $50.
SEE CABINET MODIFICATION SECTION FOR DETAILS.

CABINET BOX HEIGHT IS 4" SHORTER THAN FRAME
5 3/4" TALL VALANCE BOTTOM RAIL ARCHES UP 2 3/4"

12" DEEP CABINET	LIST PRICE						
	A	*B*	*C*	*D*	*E*	*F*	*G*
WABR3015-2B	1320	1356	1443	1443	1488	1557	1602
WABR3315-2B	1341	1374	1476	1476	1518	1599	1644
WABR3615-2B	1359	1395	1503	1503	1545	1632	1677
WABR3915-2B	1398	1434	1542	1542	1584	1671	1716
WABR4215-2B	1437	1473	1581	1581	1623	1710	1755
WABR3018-2B	1350	1386	1488	1488	1533	1620	1665
WABR3318-2B	1371	1407	1524	1524	1563	1656	1701
WABR3618-2B	1392	1425	1548	1548	1596	1686	1731
WABR3918-2B	1431	1464	1587	1587	1635	1725	1770
WABR4218-2B	1470	1503	1626	1626	1674	1764	1809
WABR3021-2B	1395	1422	1560	1560	1596	1701	1746
WABR3321-2B	1422	1458	1596	1596	1629	1737	1782
WABR3621-2B	1458	1482	1626	1626	1656	1779	1824
WABR3921-2B	1497	1521	1665	1665	1695	1818	1863
WABR4221-2B	1536	1560	1704	1704	1734	1857	1902
WABR3024-2B	1452	1488	1626	1626	1665	1773	1818
WABR3324-2B	1482	1518	1665	1665	1707	1824	1869
WABR3624-2B	1509	1545	1701	1701	1749	1869	1914
WABR3924-2B	1548	1584	1740	1740	1788	1908	1953
WABR4224-2B	1587	1623	1779	1779	1827	1947	1992
WABR3027-2B	1563	1578	1749	1749	1764	1920	1965
WABR3327-2B	1665	1680	1839	1839	1854	2028	2073
WABR3627-2B	1725	1740	1899	1899	1914	2088	2133
WABR3927-2B	1764	1779	1938	1938	1953	2127	2172
WABR4227-2B	1782	1797	1956	1956	1971	2145	2190
WABR3030-2B	1599	1614	1785	1785	1815	1956	2001
WABR3330-2B	1701	1716	1875	1875	1905	2064	2109
WABR3630-2B	1761	1776	1935	1935	1965	2124	2169
WABR3930-2B	1800	1815	1974	1974	2004	2163	2208
WABR4230-2B	1818	1833	1992	1992	2022	2181	2226
WABR3036-2B	1632	1647	1818	1818	1848	1992	2037
WABR3336-2B	1734	1749	1908	1908	1938	2100	2145
WABR3636-2B	1794	1809	1968	1968	1998	2160	2205
WABR3936-2B	1833	1848	2007	2007	2037	2199	2244
WABR4236-2B	1851	1866	2025	2025	2055	2217	2262
WABR3039-2B	1665	1680	1851	1851	1881	2028	2073
WABR3339-2B	1767	1782	1941	1941	1971	2136	2181
WABR3639-2B	1827	1842	2001	2001	2031	2196	2241
WABR3939-2B	1866	1881	2040	2040	2070	2235	2280
WABR4239-2B	1884	1899	2058	2058	2088	2253	2298
WABR3042-2B	1698	1713	1884	1884	1914	2064	2109
WABR3342-2B	1800	1815	1974	1974	2004	2172	2217
WABR3642-2B	1860	1875	2034	2034	2064	2232	2277
WABR3942-2B	1899	1914	2073	2073	2103	2271	2316
WABR4242-2B	1917	1932	2091	2091	2121	2289	2334

A-Bristol, Prairie, Savannah15
B-Plateau, Ridgegate, Summerhill
C-Augusta15, Bedford, Charleston15, Easton, Fairway, Gateway, Harbor, Hastings15, Liberty, Seneca, Vicksburg
D-Regency
E-
F-
G-Aspen15, Centennial15, Madison15, Norfolk15, Orleans, Riverton

SEE PAGE 54 FOR DOORS AVAILABLE IN MOLDED & PRICING

CABINET TYPE

12", 14", 15" & 18" TALL REFRIGERATOR WALL

NO SHELF IN 12", 14", 15", OR 18" TALL REFRIGERATOR WALLS

CUSTOM HEIGHT CABINETS CAN NOT BE LESS THAN 12" TALL FOR DOOR STYLES "B" OR "D" TO ACCOMMODATE DOOR ARCH

CABINETS N/A LESS THAN 9" TALL - 9" & 10" TALL CABINETS WILL HAVE ONE WIDE HINGE UP DOOR

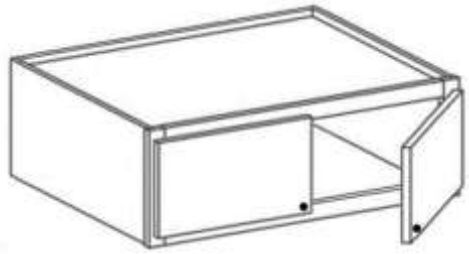

W3012U24-2B

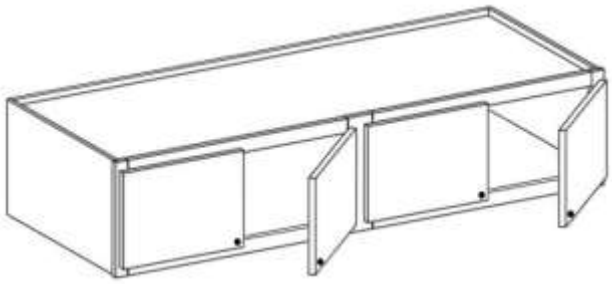

W4812U24-4B

WALLS

12" TALL REFRIGERATOR WALL

24" DEEP CABINET	LIST PRICE						
	A	*B*	*C*	*D*	*E*	*F*	*G*
W3012U24-2B	771	807	888	888	927	957	1029
W3312U24-2B	795	831	918	918	963	993	1065
W3612U24-2B	822	858	948	948	996	1026	1101
W3712U24-2B	834	870	960	960	1008	1038	1113
W3912U24-2B	843	876	984	984	1026	1056	1143
W4212U24-2B	867	903	1011	1011	1050	1080	1173
W4512U24-2B	894	927	1035	1035	1080	1110	1203
W4812U24-4B	1581	1617	1725	1725	1764	1794	1887

14" TALL REFRIGERATOR WALL

24" DEEP CABINET	LIST PRICE						
	A	*B*	*C*	*D*	*E*	*F*	*G*
W3014U24-2B	807	843	939	939	984	1014	1092
W3314U24-2B	831	867	975	975	1014	1044	1128
W3614U24-2B	858	894	1005	1005	1047	1077	1167
W3714U24-2B	870	906	1017	1017	1059	1089	1179
W3914U24-2B	882	918	1041	1041	1080	1110	1209
W4214U24-2B	909	945	1065	1065	1113	1143	1245
W4514U24-2B	933	969	1101	1101	1149	1179	1281
W4814U24-4B	1623	1659	1794	1794	1845	1875	1968

15" TALL REFRIGERATOR WALL

24" DEEP CABINET	LIST PRICE						
	A	*B*	*C*	*D*	*E*	*F*	*G*
W3015U24-2B	819	855	951	951	996	1026	1104
W3315U24-2B	843	879	987	987	1026	1056	1140
W3615U24-2B	870	906	1017	1017	1059	1089	1179
W3715U24-2B	882	918	1029	1029	1071	1101	1191
W3915U24-2B	894	930	1053	1053	1092	1122	1221
W4215U24-2B	921	957	1077	1077	1125	1155	1257
W4515U24-2B	945	981	1113	1113	1161	1191	1293
W4815U24-4B	1635	1671	1806	1806	1857	1887	1980

18" TALL REFRIGERATOR WALL

24" DEEP CABINET	LIST PRICE						
	A	*B*	*C*	*D*	*E*	*F*	*G*
W3018U24-2B	843	876	990	990	1029	1074	1149
W3318U24-2B	873	909	1026	1026	1065	1110	1194
W3618U24-2B	897	933	1062	1062	1107	1152	1233
W3718U24-2B	909	945	1074	1074	1119	1164	1245
W3918U24-2B	924	960	1098	1098	1137	1182	1275
W4218U24-2B	954	990	1128	1128	1167	1212	1311
W4518U24-2B	978	1014	1158	1158	1203	1248	1347
W4818U24-4B	1668	1704	1851	1851	1893	1938	2040

A-Bristol, Prairie, Savannah15
B-Plateau, Ridgegate, Summerhill
C-Augusta15, Bedford, Charleston15, Easton, Fairway, Gateway, Harbor, Hastings15, Liberty, Seneca, Vicksburg
D-Regency
E-
F-
G-Aspen15, Centennial15, Madison15, Norfolk15, Orleans, Riverton

SEE PAGE 54 FOR DOORS AVAILABLE IN MOLDED & PRICING

CABINET TYPE

21", 24", 27" & 30" TALL REFRIGERATOR WALL

NO SHELF IN 21" TALL
ONE ADJUSTABLE SHELF IN 24" & 27" TALL
TWO ADJUSTABLE SHELVES IN 30" TALL

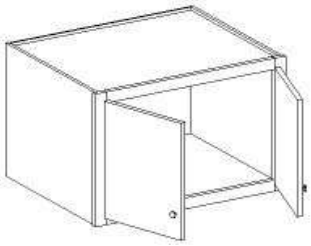

W3021U24-2B

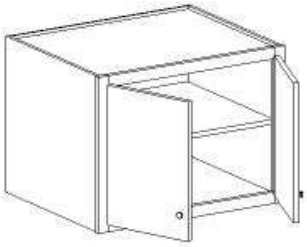

W3024U24-2B

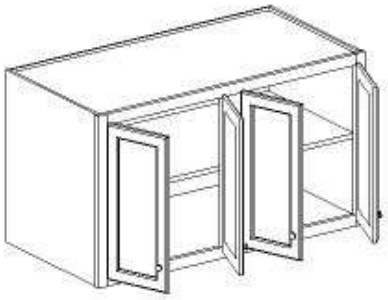

W4827U24-4B

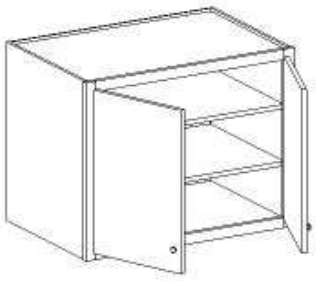

W3630U24-2B

WALLS

21" TALL REFRIGERATOR WALL

24" DEEP CABINET	LIST PRICE						
	A	*B*	*C*	*D*	*E*	*F*	*G*
W3021U24-2B	897	912	1062	1062	1107	1152	1233
W3321U24-2B	927	945	1101	1101	1146	1191	1281
W3621U24-2B	954	969	1137	1137	1182	1227	1326
W3721U24-2B	966	981	1149	1149	1194	1239	1338
W3921U24-2B	978	996	1167	1167	1212	1257	1362
W4221U24-2B	1011	1026	1200	1200	1245	1290	1398
W4521U24-2B	1041	1056	1239	1239	1284	1329	1443
W4821U24-4B	1734	1749	1938	1938	1983	2028	2136

24" TALL REFRIGERATOR WALL

24" DEEP CABINET	LIST PRICE						
	A	*B*	*C*	*D*	*E*	*F*	*G*
W3024U24-2B	963	999	1143	1143	1182	1230	1332
W3324U24-2B	999	1035	1194	1194	1239	1290	1392
W3624U24-2B	1035	1071	1233	1233	1275	1332	1437
W3724U24-2B	1047	1083	1245	1245	1287	1344	1449
W3924U24-2B	1065	1101	1284	1284	1332	1386	1500
W4224U24-2B	1098	1173	1362	1362	1404	1467	1587
W4524U24-2B	1128	1245	1434	1434	1479	1548	1677
W4824U24-4B	1821	1980	2172	2172	2214	2313	2418

27" TALL REFRIGERATOR WALL

24" DEEP CABINET	LIST PRICE						
	A	*B*	*C*	*D*	*E*	*F*	*G*
W3027U24-2B	1029	1086	1209	1209	1290	1335	1395
W3327U24-2B	1065	1122	1251	1251	1341	1386	1446
W3627U24-2B	1101	1158	1284	1284	1383	1428	1488
W3727U24-2B	1113	1170	1296	1296	1395	1440	1500
W3927U24-2B	1131	1194	1320	1320	1434	1479	1539
W4227U24-2B	1182	1266	1398	1398	1509	1554	1614
W4527U24-2B	1311	1335	1470	1470	1617	1662	1722
W4827U24-4B	2061	2070	2202	2202	2382	2427	2487

30" TALL REFRIGERATOR WALL

24" DEEP CABINET	LIST PRICE						
	A	*B*	*C*	*D*	*E*	*F*	*G*
W3630U24-2B	1104	1161	1284	1284	1365	1410	1470
W3730U24-2B	1140	1197	1326	1326	1416	1461	1521
W3930U24-2B	1176	1233	1359	1359	1458	1503	1563

SEE PAGE 54 FOR DOORS AVAILABLE IN MOLDED & PRICING

CABINET TYPE

WALLS

24" & 27" TALL BLIND CORNER WALL

ONE ADJUSTABLE SHELF 24" & 27" TALL

CAN PULL 4" - MINIMUM PULL 1"
SEE PAGE 362 FOR FINISH ON BLIND OPENING

SINGLE DOOR CABINETS COME AUTOMATICALLY HINGED TO BLIND SIDE
L AND R REPRESENT BLIND PLACEMENT



WC2424L



WC4524-2BL

24" TALL BLIND CORNER WALL

12" DEEP CABINET	LIST PRICE						
	A	*B*	*C*	*D*	*E*	*F*	*G*
WC2424L	597	612	678	678	714	759	804
WC2424R	597	612	678	678	714	759	804
WC2724L	621	639	714	714	750	795	837
WC2724R	621	639	714	714	750	795	837
WC3024L	654	669	759	759	795	840	888
WC3024R	654	669	759	759	795	840	888
WC3324L	678	693	795	795	831	876	933
WC3324R	678	693	795	795	831	876	933
WC3624L	708	723	831	831	867	912	975
WC3624R	708	723	831	831	867	912	975
WC3624-2BL	810	825	939	939	975	1020	1092
WC3624-2BR	810	825	939	939	975	1020	1092
WC3924-2BL	927	963	1098	1098	1134	1179	1281
WC3924-2BR	927	963	1098	1098	1134	1179	1281
WC4224-2BL	981	1017	1152	1152	1188	1233	1335
WC4224-2BR	981	1017	1152	1152	1188	1233	1335
WC4524-2BL	1035	1071	1206	1206	1242	1287	1389
WC4524-2BR	1035	1071	1206	1206	1242	1287	1389
WC4824-2BL	1089	1125	1260	1260	1296	1341	1443
WC4824-2BR	1089	1125	1260	1260	1296	1341	1443

27" TALL BLIND CORNER WALL

12" DEEP CABINET	LIST PRICE						
	A	*B*	*C*	*D*	*E*	*F*	*G*
WC2427L	639	654	723	723	744	789	846
WC2427R	639	654	723	723	744	789	846
WC2727L	669	684	771	771	792	837	903
WC2727R	669	684	771	771	792	837	903
WC3027L	699	714	816	816	837	882	954
WC3027R	699	714	816	816	837	882	954
WC3327L	729	858	858	858	876	921	1005
WC3327R	729	858	858	858	876	921	1005
WC3627L	765	894	897	897	924	969	1056
WC3627R	765	894	897	897	924	969	1056
WC3627-2BL	867	996	1005	1005	1026	1071	1167
WC3627-2BR	867	996	1005	1005	1026	1071	1167
WC3927-2BL	996	1026	1173	1173	1215	1260	1368
WC3927-2BR	996	1026	1173	1173	1215	1260	1368
WC4227-2BL	1050	1080	1227	1227	1269	1314	1422
WC4227-2BR	1050	1080	1227	1227	1269	1314	1422
WC4527-2BL	1104	1134	1281	1281	1323	1368	1476
WC4527-2BR	1104	1134	1281	1281	1323	1368	1476
WC4827-2BL	1158	1188	1335	1335	1377	1422	1530
WC4827-2BR	1158	1188	1335	1335	1377	1422	1530

A-Bristol, Prairie, Savannah15
B-Plateau, Ridgegate, Summerhill
C-Augusta15, Bedford, Charleston15, Easton, Fairway, Gateway, Harbor, Hastings15, Liberty, Seneca, Vicksburg
D-Regency
E-
F-
G-Aspen15, Centennial15, Madison15, Norfolk15, Orleans, Riverton

SEE PAGE 54 FOR DOORS AVAILABLE IN MOLDED & PRICING

CABINET TYPE

WALLS

30" & 36" TALL BLIND CORNER WALL

TWO ADJUSTABLE SHELVES IN 30" & 36" TALL

CAN PULL 4" - MINIMUM PULL 1"
SEE PAGE 362 FOR FINISH ON BLIND OPENING

SINGLE DOOR CABINETS COME AUTOMATICALLY HINGED TO BLIND SIDE
L AND R REPRESENT BLIND PLACEMENT



WC2430L



WC3930-2BL

30" TALL BLIND CORNER WALL

12" DEEP CABINET	LIST PRICE						
	A	*B*	*C*	*D*	*E*	*F*	*G*
WC2430L	672	690	771	771	813	858	903
WC2430R	672	690	771	771	813	858	903
WC2730L	714	729	822	822	864	909	963
WC2730R	714	729	822	822	864	909	963
WC3030L	744	759	873	873	915	960	1020
WC3030R	744	759	873	873	915	960	1020
WC3330L	780	795	918	918	960	1005	1077
WC3330R	780	795	918	918	960	1005	1077
WC3630L	816	831	969	969	1011	1056	1131
WC3630R	816	831	969	969	1011	1056	1131
WC3630-2BL	918	933	1071	1071	1113	1158	1251
WC3630-2BR	918	933	1071	1071	1113	1158	1251
WC3930-2BL	1056	1092	1251	1251	1293	1338	1455
WC3930-2BR	1056	1092	1251	1251	1293	1338	1455
WC4230-2BL	1110	1146	1305	1305	1347	1392	1509
WC4230-2BR	1110	1146	1305	1305	1347	1392	1509
WC4530-2BL	1164	1200	1359	1359	1401	1446	1563
WC4530-2BR	1164	1200	1359	1359	1401	1446	1563
WC4830-2BL	1218	1254	1413	1413	1455	1500	1617
WC4830-2BR	1218	1254	1413	1413	1455	1500	1617

36" TALL BLIND CORNER WALL

12" DEEP CABINET	LIST PRICE						
	A	*B*	*C*	*D*	*E*	*F*	*G*
WC2436L	897	912	1011	1011	1059	1107	1182
WC2436R	897	912	1011	1011	1059	1107	1182
WC2736L	939	954	1071	1071	1119	1167	1254
WC2736R	939	954	1071	1071	1119	1167	1254
WC3036L	975	990	1122	1122	1170	1218	1317
WC3036R	975	990	1122	1122	1170	1218	1317
WC3336L	1011	1026	1173	1173	1221	1269	1377
WC3336R	1011	1026	1173	1173	1221	1269	1377
WC3636L	1047	1062	1230	1230	1278	1326	1443
WC3636R	1047	1062	1230	1230	1278	1326	1443
WC3636-2BL	1149	1164	1332	1332	1380	1428	1557
WC3636-2BR	1149	1164	1332	1332	1380	1428	1557
WC3936-2BL	1305	1341	1530	1530	1578	1626	1791
WC3936-2BR	1305	1341	1530	1530	1578	1626	1791
WC4236-2BL	1359	1395	1584	1584	1632	1680	1845
WC4236-2BR	1359	1395	1584	1584	1632	1680	1845
WC4536-2BL	1413	1449	1638	1638	1686	1734	1899
WC4536-2BR	1413	1449	1638	1638	1686	1734	1899
WC4836-2BL	1467	1503	1692	1692	1740	1788	1953
WC4836-2BR	1467	1503	1692	1692	1740	1788	1953

A-Bristol, Prairie, Savannah15
B-Plateau, Ridgegate, Summerhill
C-Augusta15, Bedford, Charleston15, Easton, Fairway, Gateway, Harbor, Hastings15, Liberty, Seneca, Vicksburg
D-Regency
E-
F-
G-Aspen15, Centennial15, Madison15, Norfolk15, Orleans, Riverton

SEE PAGE 54 FOR DOORS AVAILABLE IN MOLDED & PRICING

CABINET TYPE

WALLS

39" & 42" TALL BLIND CORNER WALL

THREE ADJUSTABLE SHELVES IN 39" & 42" TALL

CAN PULL 4" - MINIMUM PULL 1"
SEE PAGE 362 FOR FINISH ON BLIND OPENING

SINGLE DOOR CABINETS COME AUTOMATICALLY HINGED TO BLIND SIDE
L AND R REPRESENT BLIND PLACEMENT



WC2439L

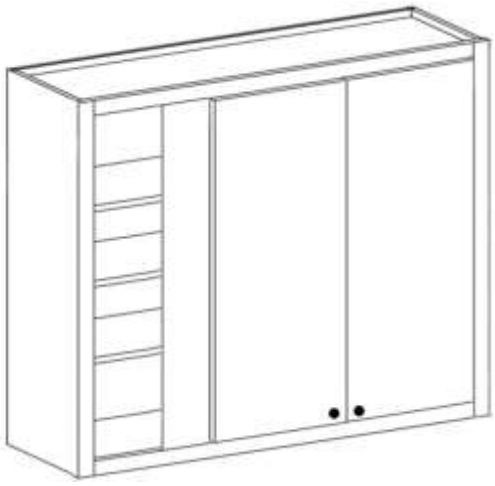

WC3639-2BL

39" TALL BLIND CORNER WALL

12" DEEP CABINET	LIST PRICE						
	A	*B*	*C*	*D*	*E*	*F*	*G*
WC2439L	975	990	1098	1098	1140	1188	1284
WC2439R	975	990	1098	1098	1140	1188	1284
WC2739L	1020	1035	1164	1164	1206	1254	1368
WC2739R	1020	1035	1164	1164	1206	1254	1368
WC3039L	1062	1077	1224	1224	1266	1314	1434
WC3039R	1062	1077	1224	1224	1266	1314	1434
WC3339L	1101	1116	1284	1284	1326	1374	1509
WC3339R	1101	1116	1284	1284	1326	1374	1509
WC3639L	1143	1158	1347	1347	1389	1437	1581
WC3639R	1143	1158	1347	1347	1389	1437	1581
WC3639-2BL	1245	1260	1449	1449	1491	1539	1692
WC3639-2BR	1245	1260	1449	1449	1491	1539	1692
WC3939-2BL	1422	1458	1674	1674	1716	1764	1959
WC3939-2BR	1422	1458	1674	1674	1716	1764	1959
WC4239-2BL	1476	1512	1728	1728	1770	1818	2013
WC4239-2BR	1476	1512	1728	1728	1770	1818	2013
WC4539-2BL	1530	1566	1782	1782	1824	1872	2067
WC4539-2BR	1530	1566	1782	1782	1824	1872	2067
WC4839-2BL	1584	1620	1836	1836	1878	1926	2121
WC4839-2BR	1584	1620	1836	1836	1878	1926	2121

42" TALL BLIND CORNER WALL

12" DEEP CABINET	LIST PRICE						
	A	*B*	*C*	*D*	*E*	*F*	*G*
WC2442L	996	1011	1119	1119	1161	1209	1305
WC2442R	996	1011	1119	1119	1161	1209	1305
WC2742L	1041	1056	1185	1185	1227	1275	1389
WC2742R	1041	1056	1185	1185	1227	1275	1389
WC3042L	1083	1098	1245	1245	1287	1335	1455
WC3042R	1083	1098	1245	1245	1287	1335	1455
WC3342L	1122	1137	1305	1305	1347	1395	1530
WC3342R	1122	1137	1305	1305	1347	1395	1530
WC3642L	1164	1179	1368	1368	1410	1458	1602
WC3642R	1164	1179	1368	1368	1410	1458	1602
WC3642-2BL	1266	1281	1470	1470	1512	1560	1713
WC3642-2BR	1266	1281	1470	1470	1512	1560	1713
WC3942-2BL	1443	1479	1695	1695	1737	1785	1980
WC3942-2BR	1443	1479	1695	1695	1737	1785	1980
WC4242-2BL	1497	1533	1749	1749	1791	1839	2034
WC4242-2BR	1497	1533	1749	1749	1791	1839	2034
WC4542-2BL	1551	1587	1803	1803	1845	1893	2088
WC4542-2BR	1551	1587	1803	1803	1845	1893	2088
WC4842-2BL	1605	1641	1857	1857	1899	1947	2142
WC4842-2BR	1605	1641	1857	1857	1899	1947	2142

A-Bristol, Prairie, Savannah15
B-Plateau, Ridgegate, Summerhill
C-Augusta15, Bedford, Charleston15, Easton, Fairway, Gateway, Harbor, Hastings15, Liberty, Seneca, Vicksburg
D-Regency
E-
F-
G-Aspen15, Centennial15, Madison15, Norfolk15, Orleans, Riverton

SEE PAGE 54 FOR DOORS AVAILABLE IN MOLDED & PRICING

CABINET TYPE

30" TALL ISLAND WALL

TWO ADJUSTABLE SHELVES IN 30"

DESIGNATE IF BLOCKING NEEDED FOR CEILING HUNG. SEE PAGE 358

L-R INDICATES KITCHEN SIDE HINGE FIRST AND ISLAND SIDE SECOND
R-L INDICATES KITCHEN SIDE HINGE FIRST AND ISLAND SIDE SECOND

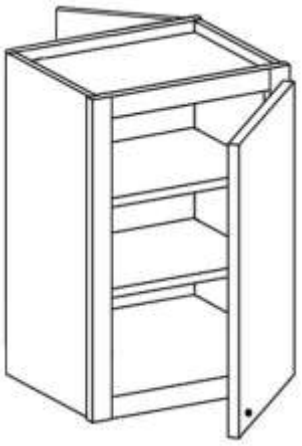

IW1830R-L



IW3030-4B

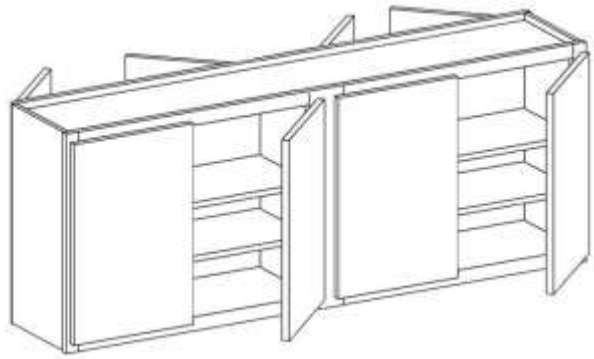

IW3930-8B

WALLS

30" TALL ISLAND WALL

12" DEEP CABINET	LIST PRICE						
	A	*B*	*C*	*D*	*E*	*F*	*G*
IW1830L-R	1071	1122	1383	1383	1515	1560	1611
IW1830R-L	1071	1122	1383	1383	1515	1560	1611
IW2130L-R	1149	1200	1488	1488	1623	1668	1740
IW2130R-L	1149	1200	1488	1488	1623	1668	1740
IW2430L-R	1224	1275	1590	1590	1728	1773	1866
IW2430R-L	1224	1275	1590	1590	1728	1773	1866
IW2430-4B	1479	1530	1845	1845	1983	2028	2121
IW2730-4B	1836	1914	2331	2331	2463	2508	2697
IW3030-4B	1938	2016	2439	2439	2571	2616	2826
IW3330-4B	2034	2118	2544	2544	2679	2724	2949
IW3630-4B	2118	2220	2652	2652	2784	2829	3075
IW3930-8B	2337	2235	2724	2724	2865	2910	3183
IW4230-8B	2448	2346	2892	2892	3030	3075	3381
IW4530-8B	2550	2448	3000	3000	3213	3258	3510
IW4830-8B	2652	2550	3162	3162	3402	3447	3699

A-Bristol, Prairie, Savannah15
B-Plateau, Ridgegate, Summerhill
C-Augusta15, Bedford, Charleston15, Easton, Fairway, Gateway, Harbor, Hastings15, Liberty, Seneca, Vicksburg
D-Regency
E-
F-
G-Aspen15, Centennial15, Madison15, Norfolk15, Orleans, Riverton

SEE PAGE 54 FOR DOORS AVAILABLE IN MOLDED & PRICING

CABINET TYPE — WALLS

WALL EASY REACH

TWO ADJUSTABLE SHELVES IN 30" & 36" TALL

NOT AVAILABLE WITH SOFT CLOSE HINGES

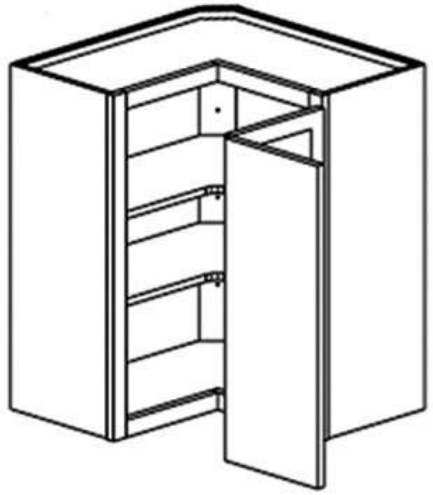

WER2436R

THREE ADJUSTABLE SHELVES IN 39", 42", & 48" TALL

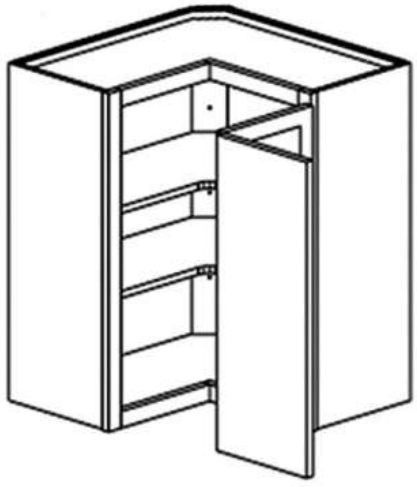

WER2739U15R

REQUIRES 24" WALL SPACE FOR INSTALLATION

12" DEEP CABINET	LIST PRICE						
	A	*B*	*C*	*D*	*E*	*F*	*G*
WER2430L	1173	1209	1332	1332	1377	1401	1575
WER2430R	1173	1209	1332	1332	1377	1401	1575
WER2436L	1224	1260	1413	1413	1455	1485	1668
WER2436R	1224	1260	1413	1413	1455	1485	1668
WER2439L	1326	1362	1545	1545	1587	1629	1827
WER2439R	1326	1362	1545	1545	1587	1629	1827
WER2442L	1362	1398	1581	1581	1623	1665	1863
WER2442R	1362	1398	1581	1581	1623	1665	1863
WER2448L	1515	1557	1764	1764	1812	1854	2085
WER2448R	1515	1557	1764	1764	1812	1854	2085

REQUIRES 27" WALL SPACE FOR INSTALLATION

15" DEEP CABINET	LIST PRICE						
	A	*B*	*C*	*D*	*E*	*F*	*G*
WER2730U15L	1506	1539	1662	1662	1710	1743	1908
WER2730U15R	1506	1539	1662	1662	1710	1743	1908
WER2736U15L	1557	1590	1743	1743	1785	1824	1998
WER2736U15R	1557	1590	1743	1743	1785	1824	1998
WER2739U15L	1659	1692	1878	1878	1917	1968	2157
WER2739U15R	1659	1692	1878	1878	1917	1968	2157
WER2742U15L	1674	1707	1893	1893	1932	1983	2172
WER2742U15R	1674	1707	1893	1893	1932	1983	2172
WER2748U15L	1845	1887	2097	2097	2142	2196	2418
WER2748U15R	1845	1887	2097	2097	2142	2196	2418

A-Bristol, Prairie, Savannah15
B-Plateau, Ridgegate, Summerhill
C-Augusta15, Bedford, Charleston15, Easton, Fairway, Gateway, Harbor, Hastings15, Liberty, Seneca, Vicksburg
D-Regency
E-
F-
G-Aspen15, Centennial15, Madison15, Norfolk15, Orleans, Riverton

SEE PAGE 54 FOR DOORS AVAILABLE IN MOLDED & PRICING

CABINET TYPE — WALLS

DIAGONAL WALL

ONE ADJUSTABLE SHELF IN 24" TALL
TWO ADJUSTABLE SHELVES IN 30" & 36" TALL

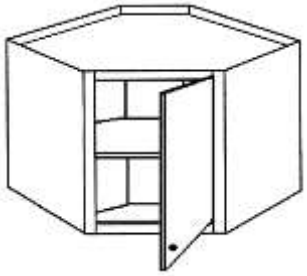

WD2424R

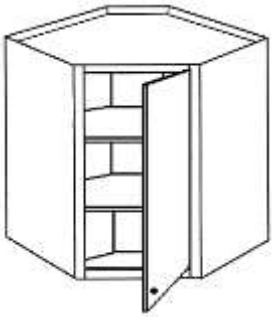

WD2430R

THREE ADJUSTABLE SHELVES IN 39", 42", & 48" TALL

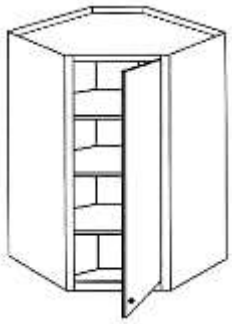

WD2442R

WD24'S REQUIRE 24" WALL SPACE FOR INSTALLATION
WD27'S REQUIRE 27" WALL SPACE FOR INSTALLATION
INTEGRATED ENDS ARE NOT RECOMMENDED - SEE PAGE 277
2 1/4" STILES

12" DEEP CABINET	LIST PRICE						
	A	*B*	*C*	*D*	*E*	*F*	*G*
WD2424L	714	765	903	903	945	984	1056
WD2424R	714	765	903	903	945	984	1056
WD2430L	918	969	1116	1116	1170	1200	1311
WD2430R	918	969	1116	1116	1170	1200	1311
WD2436L	1200	1251	1407	1407	1479	1488	1659
WD2436R	1200	1251	1407	1407	1479	1488	1659
WD2439L	1353	1404	1623	1623	1704	1755	1908
WD2439R	1353	1404	1623	1623	1704	1755	1908
WD2442L	1371	1422	1641	1641	1722	1773	1926
WD2442R	1371	1422	1641	1641	1722	1773	1926
WD2448L	1563	1617	1872	1872	1968	2025	2199
WD2448R	1563	1617	1872	1872	1968	2025	2199

15" DEEP CABINET	LIST PRICE						
	A	*B*	*C*	*D*	*E*	*F*	*G*
WD2724U15L	1047	1098	1251	1251	1311	1332	1470
WD2724U15R	1047	1098	1251	1251	1311	1332	1470
WD2730U15L	1251	1302	1464	1464	1536	1545	1719
WD2730U15R	1251	1302	1464	1464	1536	1545	1719
WD2736U15L	1530	1581	1755	1755	1848	1836	2067
WD2736U15R	1530	1581	1755	1755	1848	1836	2067
WD2739U15L	1683	1734	1968	1968	2064	2100	2316
WD2739U15R	1683	1734	1968	1968	2064	2100	2316
WD2742U15L	1701	1752	1986	1986	2082	2118	2334
WD2742U15R	1701	1752	1986	1986	2082	2118	2334
WD2748U15L	1893	1950	2220	2220	2331	2367	2607
WD2748U15R	1893	1950	2220	2220	2331	2367	2607

DIAGONAL W/TAMBOUR APPLIANCE GARAGE

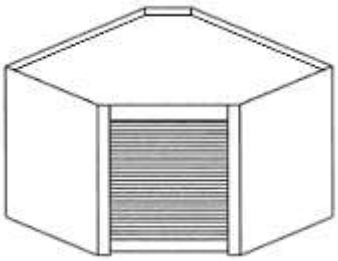

WD2418TAG
NOT AVAILABLE IN WHITE OAK OR RIFT WHITE OAK

NO FLOOR OR BOTTOM IN APPLIANCE GARAGES
INTEGRATED ENDS ARE NOT RECOMMENDED - SEE PAGE 277
2 1/4" STILES

12" DEEP CABINET	LIST PRICE						
	A	*B*	*C*	*D*	*E*	*F*	*G*
WD2418TAG	933	933	933	933	933	933	933

15" DEEP CABINET	LIST PRICE						
	A	*B*	*C*	*D*	*E*	*F*	*G*
WD2718U15TAG	1383	1383	1383	1383	1383	1383	1383

DIAGONAL W/APPLIANCE GARAGE

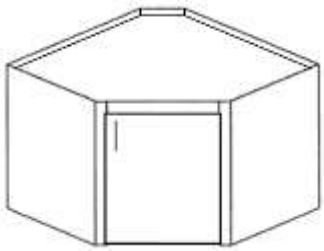

WD2718U15DAGR

12" DEEP CABINET	LIST PRICE						
	A	*B*	*C*	*D*	*E*	*F*	*G*
WD2418DAGL	684	735	873	873	915	954	1026
WD2418DAGR	684	735	873	873	915	954	1026

15" DEEP CABINET	LIST PRICE						
	A	*B*	*C*	*D*	*E*	*F*	*G*
WD2718U15DAGL	1134	1185	1323	1323	1365	1404	1476
WD2718U15DAGR	1134	1185	1323	1323	1365	1404	1476

SEE PAGE 54 FOR DOORS AVAILABLE IN MOLDED & PRICING

CABINET TYPE — WALLS

DIAGONAL WALL WITH BUTT DOOR GARAGE

TWO ADJUSTABLE SHELVES IN 48" & 54" TALL
THREE ADJUSTABLE SHELVES IN 57" & 60" TALL

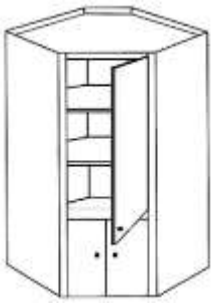

WD2448BAGR

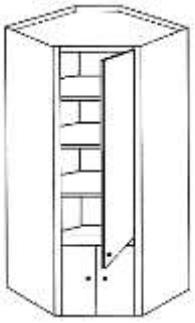

WD2460BAGR

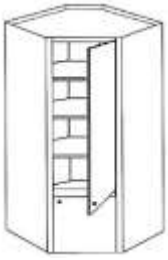

FOR A SINGLE DOOR ON GARAGE PORTION USE CODE - WDBAG-SD

CABINET HAS NO BOTTOM RAIL OR FLOOR
WD24'S REQUIRE 24" WALL SPACE FOR INSTALLATION
WD27'S REQUIRE 27" WALL SPACE FOR INSTALLATION
17 1/4" TALL GARAGE SECTION - 2 1/2" MIDDLE RAIL
INTEGRATED ENDS ARE NOT RECOMMENDED - SEE PAGE 281
2 1/4" STILES

12" DEEP CABINET	LIST PRICE						
	A	B	C	D	E	F	G
WD2448BAGL	1989	2040	2322	2322	2382	2433	2712
WD2448BAGR	1989	2040	2322	2322	2382	2433	2712
WD2454BAGL	2271	2322	2631	2631	2682	2757	3081
WD2454BAGR	2271	2322	2631	2631	2682	2757	3081
WD2457BAGL	2424	2475	2856	2856	2967	2994	3345
WD2457BAGR	2424	2475	2856	2856	2967	2994	3345
WD2460BAGL	2442	2493	2874	2874	2985	3012	3363
WD2460BAGR	2442	2493	2874	2874	2985	3012	3363
WDBAG-SD	0	0	0	0	0	0	0

15" DEEP CABINET	LIST PRICE						
	A	B	C	D	E	F	G
WD2748U15BAGL	2271	2322	2616	2616	2679	2748	3069
WD2748U15BAGR	2271	2322	2616	2616	2679	2748	3069
WD2754U15BAGL	2550	2601	2928	2928	2985	3075	3438
WD2754U15BAGR	2550	2601	2928	2928	2985	3075	3438
WD2757U15BAGL	2703	2754	3153	3153	3264	3306	3702
WD2757U15BAGR	2703	2754	3153	3153	3264	3306	3702
WD2760U15BAGL	2721	2772	3171	3171	3282	3324	3720
WD2760U15BAGR	2721	2772	3171	3171	3282	3324	3720
WDBAG-SD	0	0	0	0	0	0	0

DIAGONAL WALL W/TAMBOUR APPLIANCE GARAGE

TWO ADJUSTABLE SHELVES IN 48" & 54" TALL
TAMBOUR N/A IN RIFT WHITE OAK OR WHITE OAK

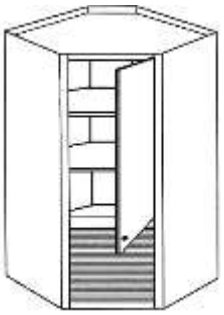

WD2448TAGR

THREE ADJUSTABLE SHELVES IN 57" & 60" TALL

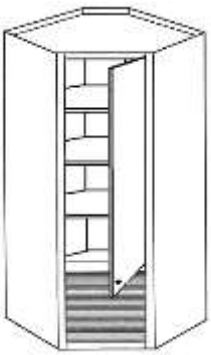

WD2460TAGR

CABINET HAS NO BOTTOM RAIL OR FLOOR
WD24'S REQUIRE 24" WALL SPACE FOR INSTALLATION
WD27'S REQUIRE 27" WALL SPACE FOR INSTALLATION
17 1/4" TALL GARAGE SECTION - 2 1/2" MIDDLE RAIL
INTEGRATED ENDS ARE NOT RECOMMENDED - SEE PAGE 281
2 1/4" STILES

12" DEEP CABINET	LIST PRICE						
	A	B	C	D	E	F	G
WD2448TAGL	1812	1863	2049	2049	2133	2151	2412
WD2448TAGR	1812	1863	2049	2049	2133	2151	2412
WD2454TAGL	2091	2142	2340	2340	2424	2460	2760
WD2454TAGR	2091	2142	2340	2340	2424	2460	2760
WD2457TAGL	2244	2295	2556	2556	2640	2688	3009
WD2457TAGR	2244	2295	2556	2556	2640	2688	3009
WD2460TAGL	2262	2313	2574	2574	2658	2706	3027
WD2460TAGR	2262	2313	2574	2574	2658	2706	3027

15" DEEP CABINET	LIST PRICE						
	A	B	C	D	E	F	G
WD2748U15TAGL	2142	2193	2490	2490	2571	2613	2928
WD2748U15TAGR	2142	2193	2490	2490	2571	2613	2928
WD2754U15TAGL	2424	2475	2790	2790	2877	2934	3285
WD2754U15TAGR	2424	2475	2790	2790	2877	2934	3285
WD2757U15TAGL	2577	2628	3015	3015	3102	3165	3549
WD2757U15TAGR	2577	2628	3015	3015	3102	3165	3549
WD2760U15TAGL	2595	2646	3033	3033	3120	3183	3567
WD2760U15TAGR	2595	2646	3033	3033	3120	3183	3567

A-Bristol, Prairie, Savannah15
B-Plateau, Ridgegate, Summerhill
C-Augusta15, Bedford, Charleston15, Easton, Fairway, Gateway, Harbor, Hastings15, Liberty, Seneca, Vicksburg
D-Regency
E-
F-
G-Aspen15, Centennial15, Madison15, Norfolk15, Orleans, Riverton

SEE PAGE 54 FOR DOORS AVAILABLE IN MOLDED & PRICING

CABINET TYPE — WALLS

DIAGONAL WALL WITH LAZY SUSAN, POLE, & TAMBOUR APPLIANCE GARAGE

TWO TRAYS IN 48" & 54" TALL

THREE TRAYS IN 57" & 60" TALL

WEIGHT CAPACITY 20 LBS PER SQUARE FOOT

TAMBOUR N/A IN RIFT WHITE OAK OR WHITE OAK

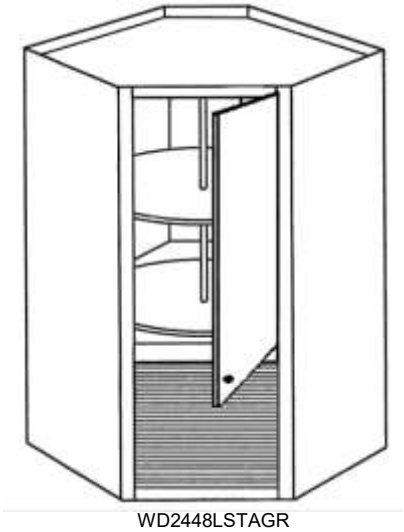

WD2448LSTAGR

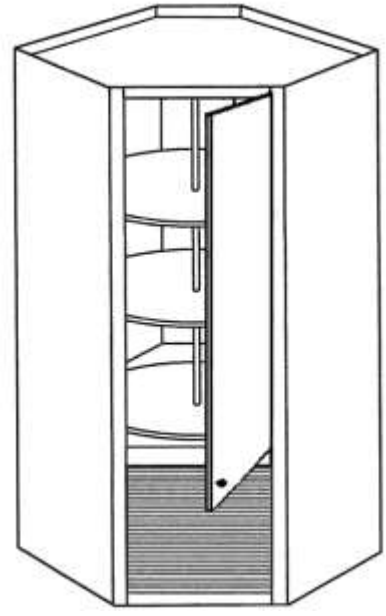

WD2457LSTAGR

CABINET HAS NO BOTTOM RAIL OR FLOOR
WD24'S REQUIRE 24" WALL SPACE FOR INSTALLATION
WD24'S HAVE 18" FULL ROUND SUSANS
17 1/4" TALL GARAGE SECTION - NO MODIFICATIONS
INTEGRATED ENDS ARE NOT RECOMMENDED - SEE PAGE 281
2 1/2" MIDDLE RAIL AND 2 1/4" STILES

12" DEEP CABINET	LIST PRICE						
	A	*B*	*C*	*D*	*E*	*F*	*G*
WD2448LSTAGL	2355	2406	2724	2724	2808	2859	3204
WD2448LSTAGR	2355	2406	2724	2724	2808	2859	3204
WD2454LSTAGL	2649	2703	3039	3039	3129	3192	3579
WD2454LSTAGR	2649	2703	3039	3039	3129	3192	3579
WD2457LSTAGL	2889	2943	3276	3276	3372	3438	3858
WD2457LSTAGR	2889	2943	3276	3276	3372	3438	3858
WD2460LSTAGL	2907	2961	3294	3294	3390	3456	3876
WD2460LSTAGR	2907	2961	3294	3294	3390	3456	3876
WITH WOOD LAZY SUSAN							
WD2448WLSTAGL	3615	3666	3981	3981	4071	4194	4464
WD2448WLSTAGR	3615	3666	3981	3981	4071	4194	4464
WD2454WLSTAGL	3909	3963	4299	4299	4392	4476	4839
WD2454WLSTAGR	3909	3963	4299	4299	4392	4476	4839
WD2457WLSTAGL	4149	4203	4533	4533	4632	4971	5118
WD2457WLSTAGR	4149	4203	4533	4533	4632	4971	5118
WD2460WLSTAGL	4167	4221	4551	4551	4650	4989	5139
WD2460WLSTAGR	4167	4221	4551	4551	4650	4989	5139

15" DEEP CABINET	LIST PRICE						
	A	*B*	*C*	*D*	*E*	*F*	*G*

CABINET HAS NO BOTTOM RAIL OR FLOOR
WD27'S REQUIRE 27" WALL SPACE FOR INSTALLATION
WD27'S HAVE 20" FULL ROUND SUSANS
17 1/4" TALL GARAGE SECTION - NO MODIFICATIONS
INTEGRATED ENDS ARE NOT RECOMMENDED - SEE PAGE 281
2 1/2" MIDDLE RAIL AND 2 1/4" STILES

WD2748U15LSTAGL	2703	2754	2985	2985	3072	3138	3522
WD2748U15LSTAGR	2703	2754	2985	2985	3072	3138	3522
WD2754U15LSTAGL	2997	3051	3297	3297	3381	3462	3885
WD2754U15LSTAGR	2997	3051	3297	3297	3381	3462	3885
WD2757U15LSTAGL	3237	3291	3606	3606	3687	3786	4248
WD2757U15LSTAGR	3237	3291	3606	3606	3687	3786	4248
WD2760U15LSTAGL	3255	3309	3627	3627	3705	3804	4269
WD2760U15LSTAGR	3255	3309	3627	3627	3705	3804	4269
WITH WOOD LAZY SUSAN							
WD2748U15WLSTAGL	3963	4017	4248	4248	4332	4383	4782
WD2748U15WLSTAGR	3963	4017	4248	4248	4332	4383	4782
WD2754U15WLSTAGL	4257	4311	4557	4557	4641	4689	5145
WD2754U15WLSTAGR	4257	4311	4557	4557	4641	4689	5145
WD2757U15WLSTAGL	4500	4551	4866	4866	4947	4968	5511
WD2757U15WLSTAGR	4500	4551	4866	4866	4947	4968	5511
WD2760U15WLSTAGL	4518	4572	4887	4887	4965	4986	5529
WD2760U15WLSTAGR	4518	4572	4887	4887	4965	4986	5529

SEE PAGE 54 FOR DOORS AVAILABLE IN MOLDED & PRICING

CABINET TYPE — WALLS

DIAGONAL WALL WITH LAZY SUSAN & POLE

TWO TRAYS IN 30" & 36" TALL
THREE TRAYS IN 39" & 42" TALL
WEIGHT CAPACITY 20 LBS PER SQUARE FOOT

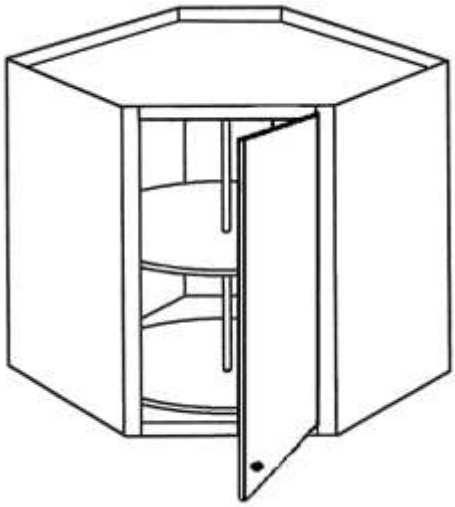

WD2430LSR

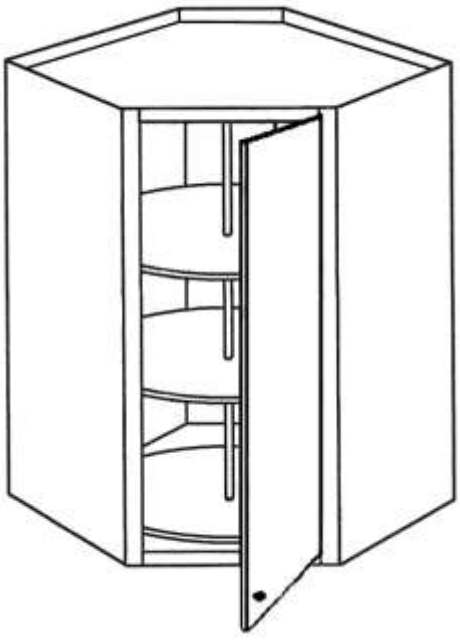

WD2442LSR

WD24'S REQUIRE 24" WALL SPACE FOR INSTALLATION
WD24'S HAVE 18" FULL ROUND SUSANS
WD27'S REQUIRE 27" WALL SPACE FOR INSTALLATION
WD27'S HAVE 20" FULL ROUND SUSANS
INTEGRATED ENDS ARE NOT RECOMMENDED - SEE PAGE 281
2 1/4" STILES

12" DEEP CABINET	LIST PRICE						
	A	*B*	*C*	*D*	*E*	*F*	*G*
WD2430LSL	1389	1422	1596	1596	1629	1674	1938
WD2430LSR	1389	1422	1596	1596	1629	1674	1938
WD2436LSL	1710	1764	1953	1953	2037	2052	2301
WD2436LSR	1710	1764	1953	1953	2037	2052	2301
WD2439LSL	1953	2007	2262	2262	2403	2373	2658
WD2439LSR	1953	2007	2262	2262	2403	2373	2658
WD2442LSL	1971	2025	2283	2283	2421	2394	2679
WD2442LSR	1971	2025	2283	2283	2421	2394	2679
12" DEEP CABINET WITH WOOD LAZY SUSAN							
WD2430WLSL	2115	2145	2250	2250	2298	2457	2532
WD2430WLSR	2115	2145	2250	2250	2298	2457	2532
WD2436WLSL	2970	3024	3213	3213	3300	3456	3561
WD2436WLSR	2970	3024	3213	3213	3300	3456	3561
WD2439WLSL	3213	3267	3522	3522	3660	3846	3918
WD2439WLSR	3213	3267	3522	3522	3660	3846	3918
WD2442WLSL	3234	3285	3540	3540	3681	3867	3939
WD2442WLSR	3234	3285	3540	3540	3681	3867	3939

15" DEEP CABINET	LIST PRICE						
	A	*B*	*C*	*D*	*E*	*F*	*G*
WD2730U15LSL	1764	1818	2010	2010	2091	2109	2364
WD2730U15LSR	1764	1818	2010	2010	2091	2109	2364
WD2736U15LSL	2058	2112	2316	2316	2403	2433	2730
WD2736U15LSR	2058	2112	2316	2316	2403	2433	2730
WD2739U15LSL	2301	2355	2628	2628	2766	2757	3093
WD2739U15LSR	2301	2355	2628	2628	2766	2757	3093
WD2742U15LSL	2319	2373	2646	2646	2784	2775	3111
WD2742U15LSR	2319	2373	2646	2646	2784	2775	3111
15" DEEP CABINET WITH WOOD LAZY SUSAN							
WD2730U15WLSL	3024	3078	3270	3270	3351	3390	3624
WD2730U15WLSR	3024	3078	3270	3270	3351	3390	3624
WD2736U15WLSL	3321	3375	3576	3576	3660	3696	3990
WD2736U15WLSR	3321	3375	3576	3576	3660	3696	3990
WD2739U15WLSL	3561	3615	3888	3888	4026	4086	4353
WD2739U15WLSR	3561	3615	3888	3888	4026	4086	4353
WD2742U15WLSL	3579	3633	3906	3906	4044	4104	4374
WD2742U15WLSR	3579	3633	3906	3906	4044	4104	4374

A-Bristol, Prairie, Savannah15
B-Plateau, Ridgegate, Summerhill
C-Augusta15, Bedford, Charleston15, Easton, Fairway, Gateway, Harbor, Hastings15, Liberty, Seneca, Vicksburg
D-Regency
E-
F-
G-Aspen15, Centennial15, Madison15, Norfolk15, Orleans, Riverton

SEE PAGE 54 FOR DOORS AVAILABLE IN MOLDED & PRICING

CABINET TYPE — WALLS

DIAGONAL WALL WITH LAZY SUSAN, POLE, & BUTT DOOR GARAGE

TWO TRAYS IN 48" & 54" TALL
THREE TRAYS IN 57" & 60" Tall
WEIGHT CAPACITY 20 LBS PER SQUARE FOOT

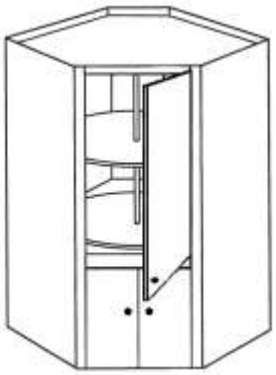

WD2448LSBAGR

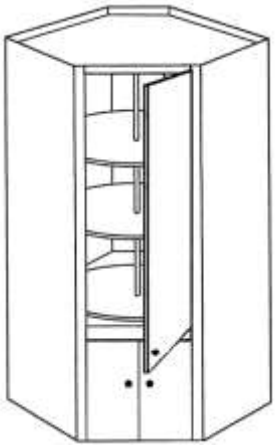

WD2460LSBAGR

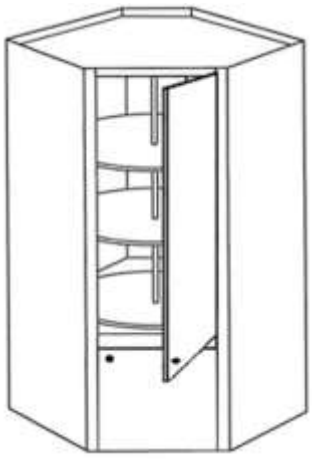

FOR A SINGLE DOOR ON GARAGE PORTION USE CODE - WDBAG-SD

CABINET HAS NO BOTTOM RAIL OR FLOOR
WD24'S REQUIRE 24" WALL SPACE FOR INSTALLATION
WD24'S HAVE 18" FULL ROUND SUSANS
WD27'S REQUIRE 27" WALL SPACE FOR INSTALLATION
WD27'S HAVE 20" FULL ROUND SUSANS
17 1/4" TALL GARAGE SECTION - 2 1/2" MIDDLE RAIL
INTEGRATED ENDS ARE NOT RECOMMENDED - SEE PAGE 281
2 1/4" STILES

12" DEEP CABINET	LIST PRICE						
	A	*B*	*C*	*D*	*E*	*F*	*G*
WD2448LSBAGL	2616	2670	2991	2991	3051	3135	3504
WD2448LSBAGR	2616	2670	2991	2991	3051	3135	3504
WD2454LSBAGL	2910	2964	3312	3312	3372	3477	3885
WD2454LSBAGR	2910	2964	3312	3312	3372	3693	3885
WD2457LSBAGL	3072	3126	3549	3549	3606	3726	4164
WD2457LSBAGR	3072	3126	3549	3549	3606	3726	4164
WD2460LSBAGL	3090	3144	3567	3567	3627	3744	4182
WD2460LSBAGR	3090	3144	3567	3567	3627	3744	4182
WDBAG-SD	0	0	0	0	0	0	0

12" DEEP CABINET WITH WOOD LAZY SUSAN							
WD2448WLSBAGL	3876	3930	4251	4251	4311	4452	4764
WD2448WLSBAGR	3876	3930	4251	4251	4311	4452	4764
WD2454WLSBAGL	4173	4227	4572	4572	4632	4893	5145
WD2454WLSBAGR	4173	4227	4572	4572	4632	4893	5145
WD2457WLSBAGL	4332	4386	4809	4809	4869	5088	5424
WD2457WLSBAGR	4332	4386	4809	4809	4869	5088	5424
WD2460WLSBAGL	4353	4407	4827	4827	4887	5109	5442
WD2460WLSBAGR	4353	4407	4827	4827	4887	5109	5442
WDBAG-SD	0	0	0	0	0	0	0

15" DEEP CABINET	LIST PRICE						
	A	*B*	*C*	*D*	*E*	*F*	*G*
WD2748U15LSBAGL	2832	2886	3123	3123	3207	3276	3669
WD2748U15LSBAGR	2832	2886	3123	3123	3207	3276	3669
WD2754U15LSBAGL	3129	3180	3432	3432	3513	3603	4032
WD2754U15LSBAGR	3129	3180	3432	3432	3513	3603	4032
WD2757U15LSBAGL	3369	3423	3738	3738	3825	3927	4398
WD2757U15LSBAGR	3369	3423	3738	3738	3825	3927	4398
WD2760U15LSBAGL	3387	3441	3756	3756	3843	3948	4416
WD2760U15LSBAGR	3387	3441	3756	3756	3843	3948	4416
WDBAG-SD	0	0	0	0	0	0	0

15" DEEP CABINET WITH WOOD LAZY SUSAN							
WD2748U15WLSBAGL	4092	4146	4383	4383	4467	4503	4929
WD2748U15WLSBAGR	4092	4146	4383	4383	4467	4503	4929
WD2754U15WLSBAGL	4389	4443	4692	4692	4773	4803	5292
WD2754U15WLSBAGR	4389	4443	4692	4692	4773	4803	5292
WD2757U15WLSBAGL	4629	4683	4998	4998	5085	5106	5655
WD2757U15WLSBAGR	4629	4683	4998	4998	5085	5106	5655
WD2760U15WLSBAGL	4647	4701	5016	5016	5103	5127	5673
WD2760U15WLSBAGR	4647	4701	5016	5016	5103	5127	5673
WDBAG-SD	0	0	0	0	0	0	0

SEE PAGE 54 FOR DOORS AVAILABLE IN MOLDED & PRICING

CABINET TYPE — WALLS

DIAGONAL WALL WITH MICROWAVE, DRAWER, AND ADJUSTABLE SHELVES

ONE ADJUSTABLE SHELF IN 48" TALL
TWO ADJUSTABLE SHELVES IN 54", 57", & 60" TALL

DOVETAIL DRAWER WITH FULL EXTENSION UNDERMOUNT GUIDE

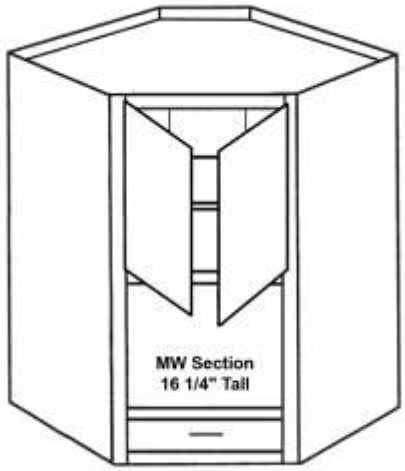

WD3348U12MWUD2B

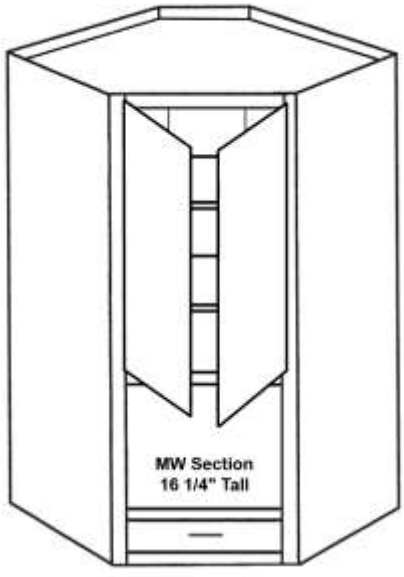

WD3654U15MWUD2B

DRAWER OPENING 4 1/2" TALL
16 1/4" TALL MICROWAVE OPENING-MAPLE PRINT IS STANDARD
2 1/4" STILES ON FRAME
INTEGRATED ENDS ARE NOT RECOMMENDED - SEE PAGE 281

12" DEEP CABINET	LIST PRICE						
	A	*B*	*C*	*D*	*E*	*F*	*G*
WD3348U12MWUD2B	4917	5019	5316	5316	5397	5565	5754
WD3648U12MWUD2B	5049	5274	5571	5571	5652	5835	6009
WD3354U12MWUD2B	5427	5556	5871	5871	5958	6096	6366
WD3654U12MWUD2B	5694	5811	5616	5616	5703	5835	6111
WD3357U12MWUD2B	5355	5448	5841	5841	5928	6117	6375
WD3657U12MWUD2B	5487	5709	6096	6096	6183	6387	6630
WD3360U12MWUD2B	5373	5466	5859	5859	5946	6135	6393
WD3660U12MWUD2B	5505	5727	6114	6114	6201	6405	6648
WITH FINISHED MICROWAVE INTERIOR							
WD3348U12MWUD2BF	5811	5913	6210	6210	6291	6459	6648
WD3648U12MWUD2BF	5943	6168	6465	6465	6546	6729	6903
WD3354U12MWUD2BF	6321	6450	6765	6765	6852	6990	7260
WD3654U12MWUD2BF	6588	6705	6510	6510	6597	6729	7005
WD3357U12MWUD2BF	6249	6342	6735	6735	6822	7011	7269
WD3657U12MWUD2BF	6381	6603	6990	6990	7077	7281	7524
WD3360U12MWUD2BF	6267	6360	6753	6753	6840	7029	7287
WD3660U12MWUD2BF	6399	6621	7008	7008	7095	7299	7542

12" DEPTH - FRAME OPENING WIDTHS
33" IS 25 3/8"
36" IS 30 5/8"

15" DEEP CABINET	LIST PRICE						
	A	*B*	*C*	*D*	*E*	*F*	*G*
WD3348U15MWUD2B	5484	5529	5826	5826	5907	6093	6417
WD3648U15MWUD2B	5616	5784	6081	6081	6162	6360	6519
WD3354U15MWUD2B	6261	6336	6126	6126	6213	6360	6621
WD3654U15MWUD2B	5793	6066	6381	6381	6468	6621	6876
WD3357U15MWUD2B	5922	5958	6351	6351	6438	6642	6477
WD3657U15MWUD2B	6054	6219	6606	6606	6693	6912	7140
WD3360U15MWUD2B	5940	5976	6369	6369	6456	6660	6495
WD3660U15MWUD2B	6072	6237	6624	6624	6711	6930	7158
WITH FINISHED MICROWAVE INTERIOR							
WD3348U15MWUD2BF	6378	6423	6720	6720	6801	6987	7311
WD3648U15MWUD2BF	6510	6678	6975	6975	7056	7254	7413
WD3354U15MWUD2BF	7155	7230	7020	7020	7107	7254	7515
WD3654U15MWUD2BF	6687	6960	7275	7275	7362	7515	7770
WD3357U15MWUD2BF	6816	6852	7245	7245	7332	7536	7371
WD3657U15MWUD2BF	6948	7113	7500	7500	7587	7806	8034
WD3360U15MWUD2BF	6834	6870	7263	7263	7350	7554	7389
WD3660U15MWUD2BF	6966	7131	7518	7518	7605	7824	8052

15" DEPTH - FRAME OPENING WIDTHS
33" IS 21 1/4"
36" IS 25 3/4"

A-Bristol, Prairie, Savannah15
B-Plateau, Ridgegate, Summerhill
C-Augusta15, Bedford, Charleston15, Easton, Fairway, Gateway, Harbor, Hastings15, Liberty, Seneca, Vicksburg
D-Regency
E-
F-
G-Aspen15, Centennial15, Madison15, Norfolk15, Orleans, Riverton

SEE PAGE 54 FOR DOORS AVAILABLE IN MOLDED & PRICING

CABINET TYPE — WALLS

WALL WITH BUILT IN MICROWAVE, DOOR, AND FULL EXTENSION DRAWER

NO SHELF IN 48"
ONE SHELF IN 54"
TWO SHELVES IN 57" AND 60"
DOVETAIL DRAWER WITH FULL EXTENSION UNDERMOUNT GUIDE

WE WILL FILL IN OPENING A MINIMUM OF 1/2" ON EACH SIDE IF NEEDED.
WE WILL NOT CUT OUT.

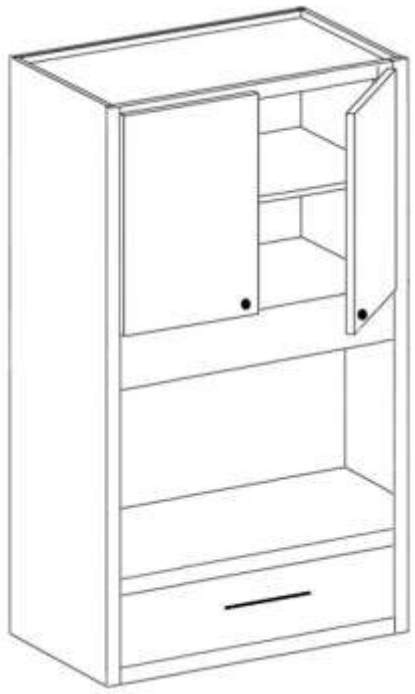

W2457BIMWUDWR-2B

WE WILL FILL IN OVEN OPENING IF NEEDED - WE WILL NOT CUT OUT
DRAWER OPENING 4 1/2" TALL
16 1/4" TALL MICROWAVE OPENING-MAPLE PRINT IS STANDARD
3 1/2" RAIL ABOVE MICROWAVE SECTION

21" DEEP CABINET	LIST PRICE						
	A	*B*	*C*	*D*	*E*	*F*	*G*
W2448BIMWUDWR-2B	2382	2586	2712	2712	2928	2997	3105
W2748BIMWUDWR-2B	2436	2640	2769	2769	2982	3129	3189
W3048BIMWUDWR-2B	2502	2706	2835	2835	3048	3129	3252
W3248BIMWUDWR-2B	2577	2781	2910	2910	3123	3204	3327
W3348BIMWUDWR-2B	2652	2856	2985	2985	3198	3279	3402
W2454BIMWUDWR-2B	2535	2739	2871	2871	3084	3165	3294
W2754BIMWUDWR-2B	2589	2793	2925	2925	3141	3216	3372
W3054BIMWUDWR-2B	2655	2859	2994	2994	3207	3297	3441
W3254BIMWUDWR-2B	2730	2934	3069	3069	3282	3372	3516
W3354BIMWUDWR-2B	2805	3009	3144	3144	3357	3447	3591
W2457BIMWUDWR-2B	2688	2892	3030	3030	3243	3333	3483
W2757BIMWUDWR-2B	2742	2946	3084	3084	3297	3384	3561
W3057BIMWUDWR-2B	2808	3012	3156	3156	3366	3465	3630
W3257BIMWUDWR-2B	2883	3087	3231	3231	3441	3540	3705
W3357BIMWUDWR-2B	2958	3162	3306	3306	3516	3615	3780
W2460BIMWUDWR-2B	2763	2967	3105	3105	3318	3408	3558
W2760BIMWUDWR-2B	2817	3021	3159	3159	3372	3459	3636
W3060BIMWUDWR-2B	2883	3087	3231	3231	3441	3540	3705
W3260BIMWUDWR-2B	2958	3162	3306	3306	3516	3615	3780
W3360BIMWUDWR-2B	3033	3237	3381	3381	3591	3690	3855

A-Bristol, Prairie, Savannah15
B-Plateau, Ridgegate, Summerhill
C-Augusta15, Bedford, Charleston15, Easton, Fairway, Gateway, Harbor, Hastings15, Liberty, Seneca, Vicksburg
D-Regency
E-
F-
G-Aspen15, Centennial15, Madison15, Norfolk15, Orleans, Riverton

SEE PAGE 54 FOR DOORS AVAILABLE IN MOLDED & PRICING

CABINET TYPE — WALLS

WALL MICROWAVE

NO SHELF IN 30" & 36" TALL
ONE ADJUSTABLE SHELF IN 39" & 42" TALL
TWO ADJUSTABLE SHELVES IN 48" TALL

WE WILL FILL IN OPENING A MINIMUM OF 1/2" ON EACH SIDE IF NEEDED.
WE WILL NOT CUT OUT.



W2748MW-2B

TOTAL MW OPENING WITHOUT SHELF IS 16 1/4" TALL
3/4" TALL X 17 1/4" DEEP FINISHED SHELF SENT LOOSE FOR MICROWAVE
MAPLE PRINT INTERIOR IS STANDARD

12" DEEP CABINET	LIST PRICE						
	A	B	C	D	E	F	G
W2430MW-2B	918	945	1167	1167	1299	1341	1404
W2730MW-2B	945	969	1194	1194	1326	1368	1431
W3030MW-2B	1020	1047	1275	1275	1407	1449	1512
W3230MW-2B	1053	1080	1308	1308	1440	1482	1545
W3330MW-2B	1071	1098	1356	1356	1488	1530	1593
W2436MW-2B	969	996	1218	1218	1350	1392	1455
W2736MW-2B	996	1020	1251	1251	1383	1425	1488
W3036MW-2B	1071	1098	1332	1332	1464	1506	1569
W3236MW-2B	1104	1131	1365	1365	1497	1539	1602
W3336MW-2B	1122	1149	1407	1407	1539	1581	1644
W2439MW-2B	1020	1047	1275	1275	1407	1449	1512
W2739MW-2B	1047	1071	1302	1302	1434	1476	1539
W3039MW-2B	1122	1149	1383	1383	1515	1557	1620
W3239MW-2B	1155	1182	1416	1416	1548	1590	1653
W3339MW-2B	1173	1200	1464	1464	1596	1638	1701
W2442MW-2B	1038	1065	1293	1293	1425	1467	1530
W2742MW-2B	1065	1089	1320	1320	1452	1494	1557
W3042MW-2B	1140	1167	1401	1401	1533	1575	1638
W3242MW-2B	1173	1200	1434	1434	1566	1608	1671
W3342MW-2B	1191	1218	1482	1482	1614	1656	1719
W2448MW-2B	1113	1137	1326	1326	1458	1500	1563
W2748MW-2B	1167	1194	1353	1353	1485	1527	1590
W3048MW-2B	1260	1284	1434	1434	1566	1608	1671
W3248MW-2B	1293	1317	1467	1467	1599	1641	1704
W3348MW-2B	1311	1335	1515	1515	1647	1689	1752
WITH FINISHED MICROWAVE INTERIOR							
W2430MW-2BFI	1812	1839	2061	2061	2193	2235	2298
W2730MW-2BFI	1839	1863	2088	2088	2220	2262	2325
W3030MW-2BFI	1914	1941	2169	2169	2301	2343	2406
W3230MW-2BFI	1947	1974	2202	2202	2334	2376	2439
W3330MW-2BFI	1965	1992	2250	2250	2382	2424	2487
W2436MW-2BFI	1863	1890	2112	2112	2244	2286	2349
W2736MW-2BFI	1890	1914	2145	2145	2277	2319	2382
W3036MW-2BFI	1965	1992	2226	2226	2358	2400	2463
W3236MW-2BFI	1998	2025	2259	2259	2391	2433	2496
W3336MW-2BFI	2016	2043	2301	2301	2433	2475	2538
W2439MW-2BFI	1914	1941	2169	2169	2301	2343	2406
W2739MW-2BFI	1941	1965	2196	2196	2328	2370	2433
W3039MW-2BFI	2016	2043	2277	2277	2409	2451	2514
W3239MW-2BFI	2049	2076	2310	2310	2442	2484	2547
W3339MW-2BFI	2067	2094	2358	2358	2490	2532	2595
W2442MW-2BFI	1932	1959	2187	2187	2319	2361	2424
W2742MW-2BFI	1959	1983	2214	2214	2346	2388	2451
W3042MW-2BFI	2034	2061	2295	2295	2427	2469	2532
W3242MW-2BFI	2067	2094	2328	2328	2460	2502	2565
W3342MW-2BFI	2085	2112	2376	2376	2508	2550	2613
W2448MW-2BFI	2007	2031	2220	2220	2352	2394	2457
W2748MW-2BFI	2061	2088	2247	2247	2379	2421	2484
W3048MW-2BFI	2154	2178	2328	2328	2460	2502	2565
W3248MW-2BFI	2187	2211	2361	2361	2493	2535	2598
W3348MW-2BFI	2205	2229	2409	2409	2541	2583	2646

A-Bristol, Prairie, Savannah15
B-Plateau, Ridgegate, Summerhill
C-Augusta15, Bedford, Charleston15, Easton, Fairway, Gateway, Harbor, Hastings15, Liberty, Seneca, Vicksburg
D-Regency
E-
F-
G-Aspen15, Centennial15, Madison15, Norfolk15, Orleans, Riverton

SEE PAGE 54 FOR DOORS AVAILABLE IN MOLDED & PRICING

CABINET TYPE — WALLS

BUILT IN MICROWAVE CABINET

NO SHELF IN 30" TALL - ONE WIDE DOOR, HINGED UP
NO HINGE STAY AVAILABLE OR INCLUDED
WE WILL FILL IN OPENING A MINIMUM OF 1/2" ON EACH SIDE IF NEEDED.
WE WILL NOT CUT OUT.



W2730BI-MW-1W

NO SHELF IN 36" TALL
ONE ADJUSTABLE SHELF IN 39" & 42" TALL
TWO ADJUSTABLE SHELVES IN 48" TALL



W2739BI-MW-2B



W2748BI-MW-2B

WE WILL FILL IN OVEN OPENING IF NEEDED - WE WILL NOT CUT OUT
16 1/4" TALL MICROWAVE OPENING W/MAPLE PRINT INTERIOR
3 1/2" RAIL ABOVE MICROWAVE SECTION

21" DEEP CABINET	LIST PRICE						
	A	*B*	*C*	*D*	*E*	*F*	*G*
W2730BI-MW-1W	1362	1395	1602	1602	N/A	1680	1791
W3030BI-MW-1W	1425	1458	1653	1653	N/A	1764	1881
W3230BI-MW-1W	1452	1485	1680	1680	N/A	1791	1908
W3330BI-MW-1W	1476	1509	1704	1704	N/A	1836	1980
W2736BI-MW-2B	1500	1530	1761	1761	1836	1947	2064
W3036BI-MW-2B	1578	1608	1842	1842	1929	1998	2115
W3236BI-MW-2B	1605	1635	1869	1869	1956	2025	2142
W3336BI-MW-2B	1629	1659	1917	1917	2004	2049	2166
W2739BI-MW-2B	1551	1581	1812	1812	1893	1998	2115
W3039BI-MW-2B	1629	1659	1893	1893	1983	2049	2166
W3239BI-MW-2B	1656	1686	1920	1920	2010	2076	2193
W3339BI-MW-2B	1680	1710	1974	1974	2055	2106	2223
W2742BI-MW-2B	1569	1599	1830	1830	1911	2016	2133
W3042BI-MW-2B	1647	1677	1911	1911	2001	2067	2184
W3242BI-MW-2B	1674	1704	1938	1938	2028	2094	2211
W3342BI-MW-2B	1698	1728	1992	1992	2073	2124	2241
W2748BI-MW-2B	1674	1704	1863	1863	1944	2049	2166
W3048BI-MW-2B	1749	1749	1944	1944	2034	2100	2217
W3248BI-MW-2B	1776	1776	1971	1971	2061	2127	2244
W3348BI-MW-2B	1815	1845	2025	2025	2109	2157	2274

A-Bristol, Prairie, Savannah15
B-Plateau, Ridgegate, Summerhill
C-Augusta15, Bedford, Charleston15, Easton, Fairway, Gateway, Harbor, Hastings15, Liberty, Seneca, Vicksburg
D-Regency
E-
F-
G-Aspen15, Centennial15, Madison15, Norfolk15, Orleans, Riverton

SEE PAGE 54 FOR DOORS AVAILABLE IN MOLDED & PRICING

CABINET TYPE — WALLS

WALL WITH TAMBOUR APPLIANCE GARAGE

TWO ADJUSTABLE SHELVES IN 48" & 54" TALL
THREE ADJUSTABLE SHELVES IN 57" & 60" TALL

TAMBOUR N/A IN RIFT WHITE OAK OR WHITE OAK

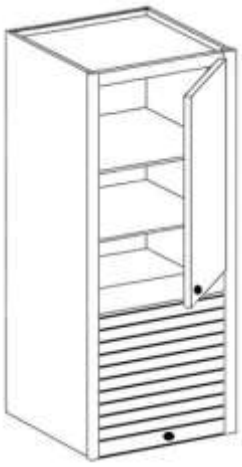

W1848TAGR

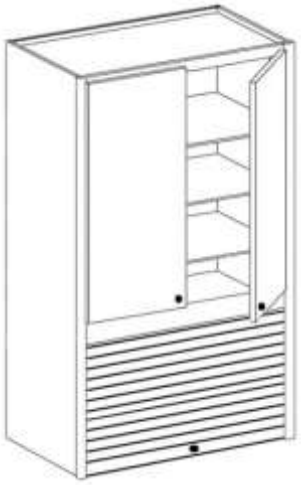

W2757TAG-2B

APPLIANCE GARAGE HEIGHT CAN NOT BE ALTERED

NO BOTTOM RAIL OR FLOOR IN CABINET
17 1/4" TALL APPLIANCE GARAGE SECTION
N/A OVER 33" WIDE
2 1/2" RAIL ABOVE GARAGE SECTION

12" DEEP CABINET	LIST PRICE						
	A	*B*	*C*	*D*	*E*	*F*	*G*
W1848TAGL	2076	2091	2286	2286	2319	2397	2586
W1848TAGR	2076	2091	2286	2286	2319	2397	2586
W2148TAGL	2151	2166	2361	2361	2394	2472	2661
W2148TAGR	2151	2166	2361	2361	2394	2472	2661
W2448TAGL	2157	2172	2403	2403	2436	2523	2709
W2448TAGR	2157	2172	2403	2403	2436	2523	2709
W2448TAG-2B	2361	2376	2607	2607	2640	2727	2913
W2748TAG-2B	2511	2526	2757	2757	2790	2877	3063
W3048TAG-2B	2682	2697	2928	2928	2961	3231	3234
W1854TAGL	2304	2322	2514	2514	2547	2634	2814
W1854TAGR	2304	2322	2514	2514	2547	2634	2814
W2154TAGL	2349	2367	2559	2559	2592	2679	2859
W2154TAGR	2349	2367	2559	2559	2592	2679	2859
W2454TAGL	2388	2403	2631	2631	2664	2724	2901
W2454TAGR	2388	2403	2631	2631	2664	2724	2901
W2454TAG-2B	2592	2607	2835	2835	2868	3111	3330
W2754TAG-2B	2742	2757	2985	2985	3018	3261	3480
W3054TAG-2B	2892	2907	3135	3135	3168	3411	3630
W1857TAGL	2406	2424	2616	2616	2649	2871	3045
W1857TAGR	2406	2424	2616	2616	2649	2871	3045
W2157TAGL	2451	2469	2661	2661	2694	2916	3090
W2157TAGR	2451	2469	2661	2661	2694	2916	3090
W2457TAGL	2490	2505	2769	2769	2802	2991	3132
W2457TAGR	2490	2505	2769	2769	2802	2991	3132
W2457TAG-2B	2694	2709	2988	2988	3021	3348	3561
W2757TAG-2B	2844	2859	3138	3138	3171	3498	3711
W3057TAG-2B	2994	3009	3288	3288	3321	3648	3861
W1860TAGL	2424	2442	2634	2634	2667	2889	3063
W1860TAGR	2424	2442	2634	2634	2667	2889	3063
W2160TAGL	2469	2487	2679	2679	2712	2934	3108
W2160TAGR	2469	2487	2679	2679	2712	2934	3108
W2460TAGL	2508	2523	2787	2787	2820	3009	3150
W2460TAGR	2508	2523	2787	2787	2820	3009	3150
W2460TAG-2B	2712	2727	3006	3006	3039	3366	3579
W2760TAG-2B	2862	2877	3156	3156	3189	3516	3729
W3060TAG-2B	3012	3027	3306	3306	3339	3666	3879

A-Bristol, Prairie, Savannah15
B-Plateau, Ridgegate, Summerhill
C-Augusta15, Bedford, Charleston15, Easton, Fairway, Gateway, Harbor, Hastings15, Liberty, Seneca, Vicksburg
D-Regency
E-
F-
G-Aspen15, Centennial15, Madison15, Norfolk15, Orleans, Riverton

SEE PAGE 54 FOR DOORS AVAILABLE IN MOLDED & PRICING

CABINET TYPE — WALLS

WALL WITH SINGLE DOOR APPLIANCE GARAGE

TWO ADJUSTABLE SHELVES IN 48" & 54" TALL
THREE ADJUSTABLE SHELVES IN 57" & 60" TALL



W1848SAGR

NO BOTTOM RAIL OR FLOOR IN CABINET
17 1/4" TALL APPLIANCE GARAGE SECTION
2 1/2" RAIL ABOVE GARAGE SECTION

12" DEEP CABINET	LIST PRICE						
	A	*B*	*C*	*D*	*E*	*F*	*G*
W1848SAGL	2202	2220	2418	2418	2433	2535	2835
W1848SAGR	2202	2220	2418	2418	2433	2535	2835
W1854SAGL	2433	2448	2646	2646	2661	3012	3066
W1854SAGR	2433	2448	2646	2646	2661	3012	3066
W1857SAGL	2661	2679	2877	2877	2892	3246	3294
W1857SAGR	2661	2679	2877	2877	2892	3246	3294
W1860SAGL	2679	2697	2895	2895	2910	3264	3312
W1860SAGR	2679	2697	2895	2895	2910	3264	3312
W2148SAGL	2283	2301	2499	2499	2514	2616	2916
W2148SAGR	2283	2301	2499	2499	2514	2616	2916
W2154SAGL	2514	2529	2727	2727	2742	3093	3147
W2154SAGR	2514	2529	2727	2727	2742	3093	3147
W2157SAGL	2742	2760	2958	2958	2973	3327	3375
W2157SAGR	2742	2760	2958	2958	2973	3327	3375
W2160SAGL	2760	2778	2976	2976	2991	3345	3393
W2160SAGR	2760	2778	2976	2976	2991	3345	3393

A-Bristol, Prairie, Savannah15
B-Plateau, Ridgegate, Summerhill
C-Augusta15, Bedford, Charleston15, Easton, Fairway, Gateway, Harbor, Hastings15, Liberty, Seneca, Vicksburg
D-Regency
E-
F-
G-Aspen15, Centennial15, Madison15, Norfolk15, Orleans, Riverton

SEE PAGE 54 FOR DOORS AVAILABLE IN MOLDED & PRICING

CABINET TYPE — WALLS

WALL WITH BUTT DOOR APPLIANCE GARAGE

TWO ADJUSTABLE SHELVES IN 48" & 54" TALL
THREE ADJUSTABLE SHELVES IN 57" & 60" TALL



W2448BAGR

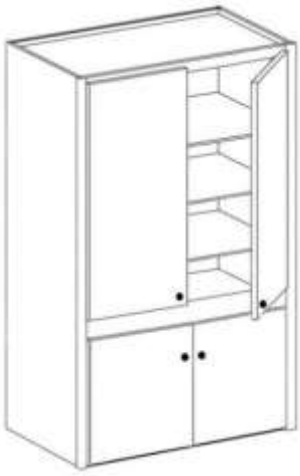

W3054BAG-4B

NO BOTTOM RAIL OR FLOOR IN CABINET
17 1/4" TALL APPLIANCE GARAGE SECTION
2 1/2" RAIL ABOVE GARAGE SECTION

12" DEEP CABINET	LIST PRICE						
	A	*B*	*C*	*D*	*E*	*F*	*G*
W2448BAGL	2487	2502	2736	2736	2778	2859	3174
W2448BAGR	2487	2502	2736	2736	2778	2859	3174
W2448BAG-4B	2844	2874	3102	3102	3144	3246	3603
W2748BAG-4B	2994	3024	3252	3252	3294	3396	3753
W3048BAG-4B	3144	3174	3402	3402	3444	3546	3903
W3348BAG-4B	3294	3309	3543	3543	3585	3666	3981
W3648BAG-4B	3444	3459	3693	3693	3735	3816	4131
W2454BAGL	2715	2730	2964	2964	3006	3096	3405
W2454BAGR	2715	2730	2964	2964	3006	3096	3405
W2454BAG-4B	3072	3102	3333	3333	3375	3483	3831
W2754BAG-4B	3222	3252	3483	3483	3525	3633	3981
W3054BAG-4B	3372	3402	3633	3633	3675	3783	4131
W3354BAG-4B	3522	3537	3771	3771	3813	3903	4212
W3654BAG-4B	3672	3687	3921	3921	3963	4053	4362
W2457BAGL	2946	2961	3195	3195	3237	3333	3633
W2457BAGR	2946	2961	3195	3195	3237	3333	3633
W2457BAG-4B	3303	3333	3561	3561	3603	3720	4062
W2757BAG-4B	3453	3483	3711	3711	3753	3870	4212
W3057BAG-4B	3603	3633	3861	3861	3903	4020	4362
W3357BAG-4B	3753	3768	4002	4002	4044	4140	4440
W3657BAG-4B	3903	3918	4152	4152	4194	4290	4590
W2460BAGL	2964	2979	3213	3213	3255	3351	3651
W2460BAGR	2964	2979	3213	3213	3255	3351	3651
W2460BAG-4B	3321	3351	3579	3579	3621	3738	4080
W2760BAG-4B	3471	3501	3729	3729	3771	3888	4230
W3060BAG-4B	3621	3651	3879	3879	3921	4038	4380
W3360BAG-4B	3771	3786	4020	4020	4062	4158	4458
W3660BAG-4B	3921	3936	4170	4170	4212	4308	4608

A-Bristol, Prairie, Savannah15
B-Plateau, Ridgegate, Summerhill
C-Augusta15, Bedford, Charleston15, Easton, Fairway, Gateway, Harbor, Hastings15, Liberty, Seneca, Vicksburg
D-Regency
E-
F-
G-Aspen15, Centennial15, Madison15, Norfolk15, Orleans, Riverton

SEE PAGE 54 FOR DOORS AVAILABLE IN MOLDED & PRICING

CABINET TYPE — WALLS

CRISSCROSS WINE RACKS



FINISHED INTERIOR
IF FINISHED ENDS ARE NEEDED SEE PAGE 275
CRISSCROSS MADE OUT OF 3/4" EDGEBANDED PLYWOOD
NO WIDTH OR HEIGHT MODIFICATIONS

12" DEEP CABINET	LIST PRICE						
	A	*B*	*C*	*D*	*E*	*F*	*G*
WRCC1818	1650	1650	1650	1650	1650	1650	1650
WRCC2424	1950	1950	1950	1950	1950	1950	1950

VERTICAL 18 X 36

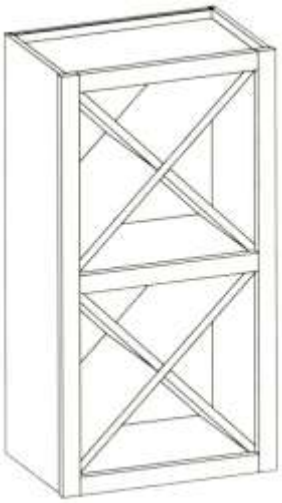

12" DEEP CABINET	LIST PRICE						
	A	*B*	*C*	*D*	*E*	*F*	*G*
WRCC1836	2850	2850	2850	2850	2850	2850	2850

HORIZONTAL 36 X 18

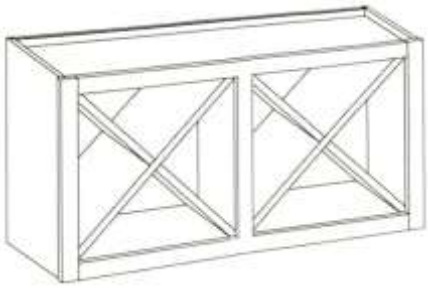

12" DEEP CABINET	LIST PRICE						
	A	*B*	*C*	*D*	*E*	*F*	*G*
WRCC3618	2850	2850	2850	2850	2850	2850	2850

A-Bristol, Prairie, Savannah15
B-Plateau, Ridgegate, Summerhill
C-Augusta15, Bedford, Charleston15, Easton, Fairway, Gateway, Harbor, Hastings15, Liberty, Seneca, Vicksburg
D-Regency
E-
F-
G-Aspen15, Centennial15, Madison15, Norfolk15, Orleans, Riverton

SEE PAGE 54 FOR DOORS AVAILABLE IN MOLDED & PRICING

CABINET TYPE — WALLS

CRISSCROSS WINE RACKS

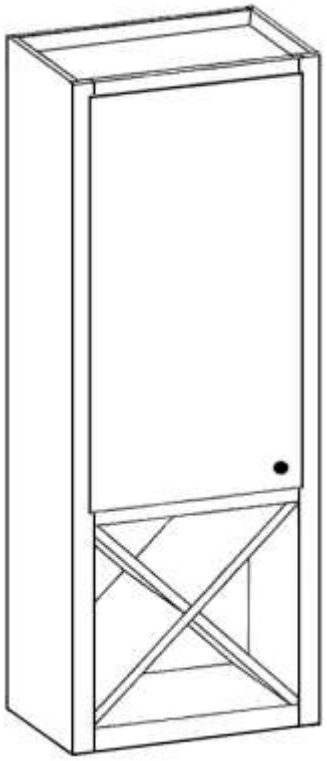

WRCC2460DL

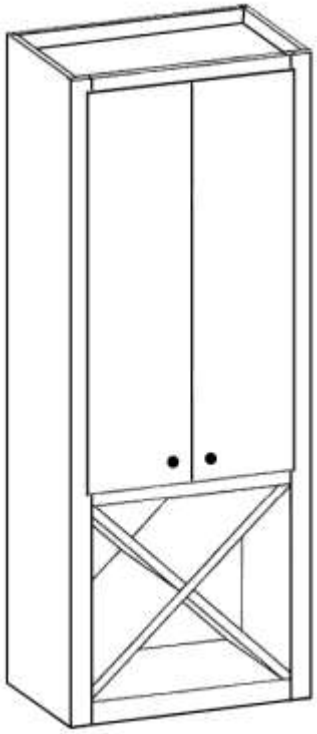

WRCC2460D-2B

FINISHED INTERIOR IN WINE SECTION
IF FINISHED ENDS ARE NEEDED SEE PAGE 279
CRISSCROSS MADE OUT OF 3/4" EDGEBANDED PLYWOOD
NO HEIGHT MODIFICATIONS TO WINE RACK SECTION
NO WIDTH MODIFICATION TO CABINET
WINE RACK PORTION IS 14 1/2" TALL ON 18" WIDE
WINE RACK PORTION IS 20 1/2" TALL ON 24" WIDE

12" DEEP CABINET	LIST PRICE						
	A	*B*	*C*	*D*	*E*	*F*	*G*
WRCC1848DL	2547	2562	2664	2664	2688	2712	2781
WRCC1848DR	2547	2562	2664	2664	2688	2712	2781
WRCC1854DL	2562	2577	2679	2679	2700	2724	2802
WRCC1854DR	2562	2577	2679	2679	2700	2724	2802
WRCC1857DL	2682	2697	2799	2799	2820	2844	2922
WRCC1857DR	2682	2697	2799	2799	2820	2844	2922
WRCC1860DL	2775	2793	2919	2919	2940	2985	3081
WRCC1860DR	2775	2793	2919	2919	2940	2985	3081
WRCC2448DL	2619	2634	2757	2757	2772	2811	2895
WRCC2448DR	2619	2634	2757	2757	2772	2811	2895
WRCC2448D-2B	2745	2760	2883	2883	2898	2940	3024
WRCC2454DL	2628	2643	2775	2775	2796	2832	2916
WRCC2454DR	2628	2643	2775	2775	2796	2832	2916
WRCC2454D-2B	2757	2772	2904	2904	2925	2961	3045
WRCC2457DL	2748	2763	2895	2895	2916	2982	3066
WRCC2457DR	2748	2763	2895	2895	2916	2982	3066
WRCC2457D-2B	2877	2892	3012	3012	3045	3081	3165
WRCC2460DL	2847	2862	3021	3021	3042	3093	3177
WRCC2460DR	2847	2862	3021	3021	3042	3093	3177
WRCC2460D-2B	2976	2991	3150	3150	3168	3408	3492

SEE PAGE 54 FOR DOORS AVAILABLE IN MOLDED & PRICING

CABINET TYPE — WALLS

WALL WITH WINE RACK & OPEN SECTION

N/A IN RIFT WHITE OAK OR WHITE OAK

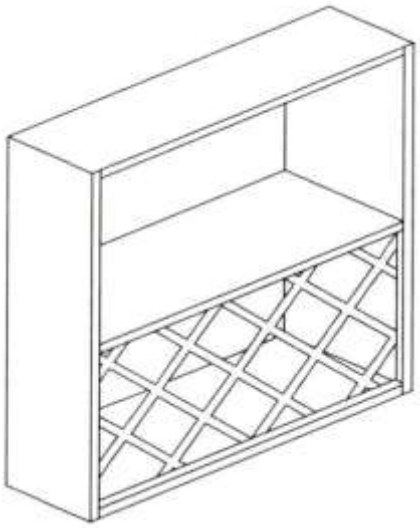

W2730WRND

FINISHED INTERIOR STANDARD
IF FINISHED ENDS ARE NEEDED SEE PAGE 279
BOTTOM SECTION IS 14 1/2" TALL

12" DEEP CABINET	LIST PRICE						
	A	*B*	*C*	*D*	*E*	*F*	*G*
W2430WRND	2271	2271	2271	2271	2271	2271	2271
W2730WRND	2301	2301	2301	2301	2301	2301	2301
W3030WRND	2331	2331	2331	2331	2331	2331	2331
W3330WRND	2367	2367	2367	2367	2367	2367	2367
W3630WRND	2397	2397	2397	2397	2397	2397	2397
W2436WRND	2493	2493	2493	2493	2493	2493	2493
W2736WRND	2532	2532	2532	2532	2532	2532	2532
W3036WRND	2571	2571	2571	2571	2571	2571	2571
W3336WRND	2610	2610	2610	2610	2610	2610	2610
W3636WRND	2646	2646	2646	2646	2646	2646	2646
W2439WRND	2700	2700	2700	2700	2700	2700	2700
W2739WRND	2745	2745	2745	2745	2745	2745	2745
W3039WRND	2790	2790	2790	2790	2790	2790	2790
W3339WRND	2835	2835	2835	2835	2835	2835	2835
W3639WRND	2877	2877	2877	2877	2877	2877	2877
W2442WRND	2718	2718	2718	2718	2718	2718	2718
W2742WRND	2763	2763	2763	2763	2763	2763	2763
W3042WRND	2808	2808	2808	2808	2808	2808	2808
W3342WRND	2853	2853	2853	2853	2853	2853	2853
W3642WRND	2895	2895	2895	2895	2895	2895	2895

WALL WITH WINE RACK & DOORS

30", 36", & 39" HAS NO SHELF IN TOP SECTION
42" HAS ONE SHELF IN TOP SECTION

N/A IN RIFT WHITE OAK OR WHITE OAK

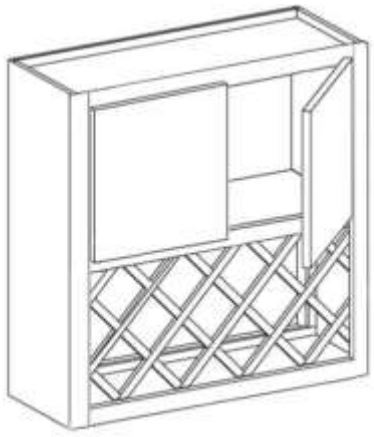

W2430WRD-2B

FINISHED INTERIOR IN BOTTOM SECTION STANDARD
IF FINISHED ENDS ARE NEEDED SEE PAGE 279
BOTTOM SECTION IS 14 1/2" TALL

12" DEEP CABINET	LIST PRICE						
	A	*B*	*C*	*D*	*E*	*F*	*G*
W2430WRD-2B	2862	2877	2922	2922	2958	3072	3417
W2730WRD-2B	2928	2943	2973	2973	3012	3123	3483
W3030WRD-2B	2994	3009	3024	3024	3066	3174	3549
W3330WRD-2B	3060	3075	3096	3096	3120	3225	3615
W3630WRD-2B	3102	3117	3138	3138	3156	3267	3657
W2436WRD-2B	3102	3117	3207	3207	3243	3372	3759
W2736WRD-2B	3168	3183	3258	3258	3297	3423	3825
W3036WRD-2B	3234	3249	3309	3309	3351	3474	3891
W3336WRD-2B	3273	3291	3372	3372	3411	3537	3957
W3636WRD-2B	3309	3324	3417	3417	3459	3588	4020
W2439WRD-2B	3321	3336	3417	3417	3453	3612	4005
W2739WRD-2B	3387	3402	3468	3468	3507	3663	4071
W3039WRD-2B	3453	3468	3519	3519	3561	3693	4137
W3339WRD-2B	3498	3513	3579	3579	3627	3762	4212
W3639WRD-2B	3540	3555	3636	3636	3678	3813	4275
W2442WRD-2B	3339	3354	3435	3435	3471	3630	4023
W2742WRD-2B	3405	3420	3486	3486	3525	3681	4089
W3042WRD-2B	3471	3486	3537	3537	3579	3711	4155
W3342WRD-2B	3516	3531	3597	3597	3645	3780	4230
W3642WRD-2B	3558	3573	3654	3654	3696	3831	4293

SEE PAGE 54 FOR DOORS AVAILABLE IN MOLDED & PRICING

CABINET TYPE — WALLS

WALL WINE RACK

N/A IN RIFT WHITE OAK OR WHITE OAK

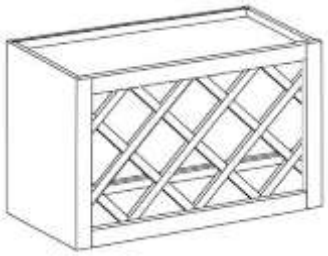

W3018WR

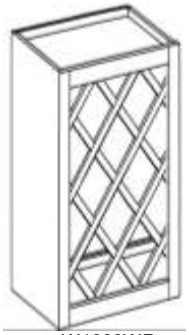

W1830WR

FINISHED INTERIOR STANDARD
IF FINISHED ENDS ARE NEEDED SEE PAGE 279
3 3/4" x 3 3/4" BOTTLE OPENINGS

12" DEEP CABINET	LIST PRICE						
	A	B	C	D	E	F	G
W1830WR	2382	2382	2382	2382	2382	2382	2382
W2130WR	2427	2427	2427	2427	2427	2427	2427
W2430WR	2484	2484	2484	2484	2484	2484	2484
W3018WR	2382	2382	2382	2382	2382	2382	2382
W3618WR	2424	2424	2424	2424	2424	2424	2424
W3021WR	2427	2427	2427	2427	2427	2427	2427
W3621WR	2490	2490	2490	2490	2490	2490	2490
W3024WR	2484	2484	2484	2484	2484	2484	2484
W3624WR	2541	2541	2541	2541	2541	2541	2541

WALL WINE CUBBIE

NO MODIFICATIONS



WWC30X6X12H
HORIZONTAL

FACE FRAME HAS EDGEBANDING
TOPS AND BOTTOMS ARE FINISHED BUT NOT EDGEBANDED.
DESIGNED TO FIT BETWEEN 2 CABINETS
MADE OF 3/4" MATERIAL



WWC6X36X12V
VERTICAL

FACE FRAME HAS EDGEBANDING
MADE OF 3/4" MATERIAL

FINISHED INTERIOR
FOR DIMENSION INFORMATION SEE PAGE 65
STAINED EXTERIOR WILL HAVE PINHOLES. SEE MOD ON PAGE 359 IF PINHOLES ARE TO BE FILLED IN. 1/4" FINISHED ENDS NOT AVAILABLE

12" DEEP CABINET	LIST PRICE						
	A	B	C	D	E	F	G
WWC30X6X12H	870	870	870	870	870	870	870
WWC6X30X12V	870	870	870	870	870	870	870
WWC36X6X12H	1020	1020	1020	1020	1020	1020	1020
WWC6X36X12V	1020	1020	1020	1020	1020	1020	1020
WWC39X6X12H	1170	1170	1170	1170	1170	1170	1170
WWC6X39X12V	1170	1170	1170	1170	1170	1170	1170
WWC42X6X12H	1320	1320	1320	1320	1320	1320	1320
WWC6X42X12V	1320	1320	1320	1320	1320	1320	1320
WWC48X6X12H	1470	1470	1470	1470	1470	1470	1470
WWC6X48X12V	1470	1470	1470	1470	1470	1470	1470

WALL WINE CUBBIE WITH FACE FRAME

NO MODIFICATIONS

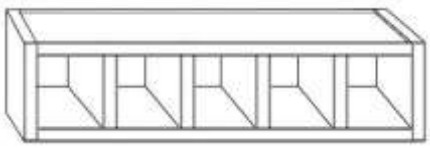

WWFF30X6.5X12H

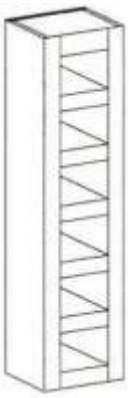

WWFF6.5X36X12V

FOR DIMENSION INFORMATION SEE PAGE 65
FINISHED INTERIOR
1/4" FINISHED ENDS AVAILABLE ON PAGE 279

12" DEEP CABINET	LIST PRICE						
	A	B	C	D	E	F	G
WWFF30X6.5X12H	825	825	825	825	825	825	825
WWFF6.5X30X12V	825	825	825	825	825	825	825
WWFF36X6.5X12H	975	975	975	975	975	975	975
WWFF6.5X36X12V	975	975	975	975	975	975	975
WWFF39X6.5X12H	1125	1125	1125	1125	1125	1125	1125
WWFF6.5X39X12V	1125	1125	1125	1125	1125	1125	1125
WWFF42X6.5X12H	1275	1275	1275	1275	1275	1275	1275
WWFF6.5X42X12V	1275	1275	1275	1275	1275	1275	1275
WWFF48X6.5X12H	1425	1425	1425	1425	1425	1425	1425
WWFF6.5X48X12V	1425	1425	1425	1425	1425	1425	1425

A-Bristol, Prairie, Savannah15
B-Plateau, Ridgegate, Summerhill
C-Augusta15, Bedford, Charleston15, Easton, Fairway, Gateway, Harbor, Hastings15, Liberty, Seneca, Vicksburg
D-Regency
E-
F-
G-Aspen15, Centennial15, Madison15, Norfolk15, Orleans, Riverton

SEE PAGE 54 FOR DOORS AVAILABLE IN MOLDED & PRICING

CABINET TYPE — WALLS

WALL PLATE RACK

NO SHELF IN 30"& 36" TALL
ONE ADJUSTABLE SHELF IN 39" & 42" TALL
N/A IN RIFT WHITE OAK OR WHITE OAK

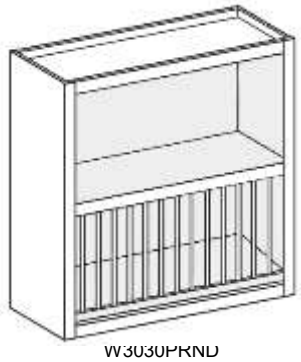

W3030PRND

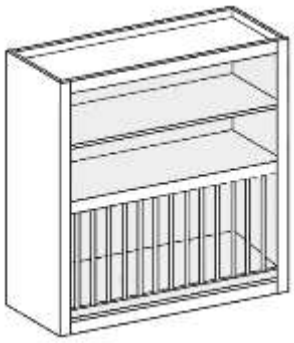

W3042PRND



W3030PRD-2B



PLATE RACK SITS BACK 2 1/2" FROM RAIL

FINISHED INTERIOR STANDARD
11 3/4" OPENING FOR PLATE RACK
OPENING HEIGHTS CAN NOT BE ALTERED
3 REMOVABLE DOWELS
N/A OVER 36" WIDE
IF FINISHED ENDS ARE NEEDED SEE PAGE 279

12" DEEP CABINET	LIST PRICE						
	A	*B*	*C*	*D*	*E*	*F*	*G*
WITHOUT DOORS							
W3030PRND	2400	2400	2400	2400	2400	2400	2400
W3330PRND	2436	2436	2436	2436	2436	2436	2436
W3630PRND	2469	2469	2469	2469	2469	2469	2469
W3036PRND	2646	2646	2646	2646	2646	2646	2646
W3336PRND	2688	2688	2688	2688	2688	2688	2688
W3636PRND	2724	2724	2724	2724	2724	2724	2724
W3039PRND	2871	2871	2871	2871	2871	2871	2871
W3339PRND	2919	2919	2919	2919	2919	2919	2919
W3639PRND	2961	2961	2961	2961	2961	2961	2961
W3042PRND	2889	2889	2889	2889	2889	2889	2889
W3342PRND	2937	2937	2937	2937	2937	2937	2937
W3642PRND	2979	2979	2979	2979	2979	2979	2979

WITH DOORS
FINISHED INTERIOR STANDARD

12" DEEP CABINET	LIST PRICE						
	A	*B*	*C*	*D*	*E*	*F*	*G*
W3030PRD-2B	2730	2745	3009	3009	3057	3159	3531
W3330PRD-2B	2802	2817	3081	3081	3129	3231	3603
W3630PRD-2B	2874	2889	3153	3153	3201	3303	3675
W3036PRD-2B	2946	2961	3225	3225	3273	3375	3747
W3336PRD-2B	3018	3033	3297	3297	3345	3447	3819
W3636PRD-2B	3090	3105	3369	3369	3417	3519	3891
W3039PRD-2B	3162	3177	3441	3441	3489	3591	3963
W3339PRD-2B	3234	3249	3513	3513	3561	3663	4035
W3639PRD-2B	3306	3321	3585	3585	3633	3735	4107
W3042PRD-2B	3378	3393	3657	3657	3705	3807	4179
W3342PRD-2B	3450	3465	3729	3729	3777	3879	4251
W3642PRD-2B	3522	3537	3801	3801	3849	3951	4323

A-Bristol, Prairie, Savannah15
B-Plateau, Ridgegate, Summerhill
C-Augusta15, Bedford, Charleston15, Easton, Fairway, Gateway, Harbor, Hastings15, Liberty, Seneca, Vicksburg
D-Regency
E-
F-
G-Aspen15, Centennial15, Madison15, Norfolk15, Orleans, Riverton

SEE PAGE 54 FOR DOORS AVAILABLE IN MOLDED & PRICING

CABINET TYPE — WALLS

WALL ORGANIZER WITH HORIZONTAL CENTER OPENING

NO SHELF IN 30" TALL
ONE ADJUSTABLE SHELF IN 36" & 39" TALL
TWO ADJUSTABLE SHELVES IN 42" TALL

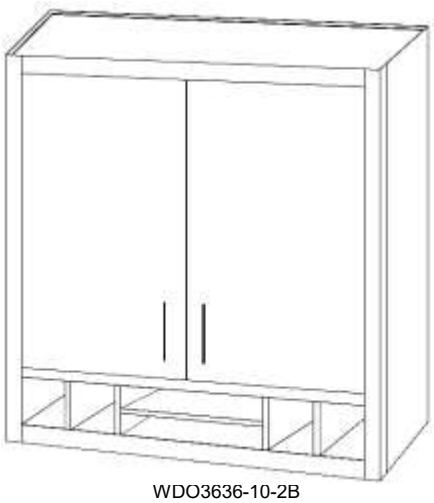

WDO3636-10-2B

SEE PAGE 364 FOR THE FOLLOWING MODIFICATION OPTIONS:
1. OPTION TO CHANGE OPENING SIZES
2. OPTION FOR FULL HEIGHT DOOR OPTION
3. OPTION FOR HINGED-DOWN DRAWER FRONT OPTION

10" TALL FINISHED ORGANIZER SECTION
CENTER OPENING OF ORGANIZER IS 12" WIDE
30" & 33" WIDE WILL HAVE TWO OPENINGS ON EACH END
36" WIDE WILL HAVE THREE OPENINGS ON EACH END

12" DEEP CABINET	LIST PRICE						
	A	*B*	*C*	*D*	*E*	*F*	*G*
WDO3030-10-2B	2730	2745	3009	3009	3057	3159	3531
WDO3330-10-2B	2802	2817	3081	3081	3129	3231	3603
WDO3630-10-2B	2874	2889	3153	3153	3201	3303	3675
WDO3036-10-2B	2946	2961	3225	3225	3273	3375	3747
WDO3336-10-2B	3018	3033	3297	3297	3345	3447	3819
WDO3636-10-2B	3090	3105	3369	3369	3417	3519	3891
WDO3039-10-2B	3162	3177	3441	3441	3489	3591	3963
WDO3339-10-2B	3234	3249	3513	3513	3561	3663	4035
WDO3639-10-2B	3306	3321	3585	3585	3633	3735	4107
WDO3042-10-2B	3378	3393	3657	3657	3705	3807	4179
WDO3342-10-2B	3450	3465	3729	3729	3777	3879	4251
WDO3642-10-2B	3522	3537	3801	3801	3849	3951	4323

WALL ORGANIZER WITH VERTICLE OPENINGS

NO SHELF IN 30" TALL
ONE ADJUSTABLE SHELF IN 36" & 39" TALL
TWO ADJUSTABLE SHELVES IN 42" TALL

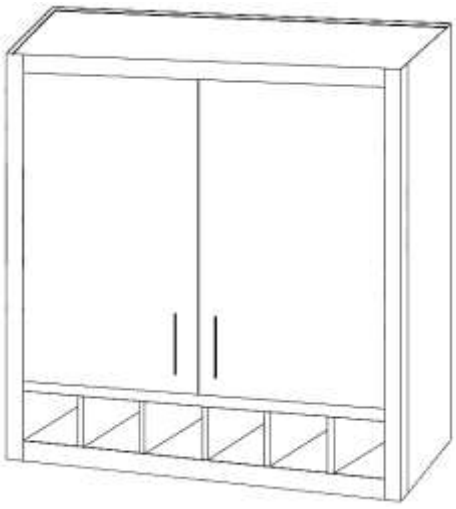

WDO3030-6-2B

SEE PAGE 364 FOR THE FOLLOWING MODIFICATION OPTIONS:
1. OPTION TO CHANGE OPENING SIZES
2. OPTION FOR FULL HEIGHT DOOR OPTION
3. OPTION FOR HINGED-DOWN DRAWER FRONT OPTION

6" TALL FINISHED ORGANIZER SECTION
30" - 6 DIVIDERS - 4" Compartments
33" - 6 DIVIDERS - 4 1/2" Compartments
36" - 7 DIVIDERS 4 7/32" Compartments

12" DEEP CABINET	LIST PRICE						
	A	*B*	*C*	*D*	*E*	*F*	*G*
WDO3030-6-2B	2730	2745	3009	3009	3057	3159	3531
WDO3330-6-2B	2802	2817	3081	3081	3129	3231	3603
WDO3630-6-2B	2874	2889	3153	3153	3201	3303	3675
WDO3036-6-2B	2946	2961	3225	3225	3273	3375	3747
WDO3336-6-2B	3018	3033	3297	3297	3345	3447	3819
WDO3636-6-2B	3090	3105	3369	3369	3417	3519	3891
WDO3039-6-2B	3162	3177	3441	3441	3489	3591	3963
WDO3339-6-2B	3234	3249	3513	3513	3561	3663	4035
WDO3639-6-2B	3306	3321	3585	3585	3633	3735	4107
WDO3042-6-2B	3378	3393	3657	3657	3705	3807	4179
WDO3342-6-2B	3450	3465	3729	3729	3777	3879	4251
WDO3642-6-2B	3522	3537	3801	3801	3849	3951	4323

A-Bristol, Prairie, Savannah15
B-Plateau, Ridgegate, Summerhill
C-Augusta15, Bedford, Charleston15, Easton, Fairway, Gateway, Harbor, Hastings15, Liberty, Seneca, Vicksburg
D-Regency
E-
F-
G-Aspen15, Centennial15, Madison15, Norfolk15, Orleans, Riverton

SEE PAGE 54 FOR DOORS AVAILABLE IN MOLDED & PRICING

CABINET TYPE — WALLS

WALL WITH FULL EXTENSION DRAWER

TWO ADJUSTABLE SHELVES IN 42" & 48" TALL
THREE ADJUSTABLE SHELVES IN 54" TALL
SEE PAGE 27 FOR INFORMATION ON MULTI PANEL DOORS
DOVETAIL DRAWER WITH FULL EXTENSION UNDERMOUNT GUIDE

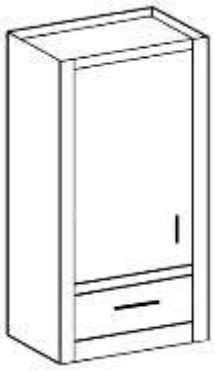

W1542UDWRL

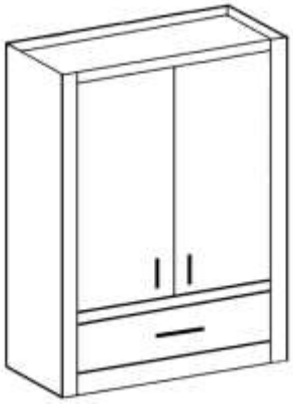

W2442UDWR-2B

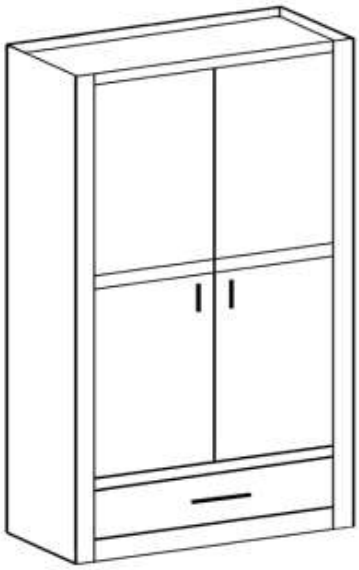

W2454UDWR-2B

DRAWER HAS FULL EXTENSION GUIDE
DRAWER OPENING IS 4 1/2" TALL
N/A OVER 36" WIDE OR LESS THAN 12" DEEP
54", 57", & 60" WILL HAVE TWO PANELS ON DOORS

12" DEEP CABINET	LIST PRICE						
	A	*B*	*C*	*D*	*E*	*F*	*G*
W1542UDWRL	1944	1959	2088	2088	2106	2154	2280
W1542UDWRR	1944	1959	2088	2088	2106	2154	2280
W1842UDWRL	1998	2013	2142	2142	2160	2208	2334
W1842UDWRR	1998	2013	2142	2142	2160	2208	2334
W2142UDWRL	2073	2088	2217	2217	2235	2283	2409
W2142UDWRR	2073	2088	2217	2217	2235	2283	2409
W2442UDWRL	2148	2163	2292	2292	2310	2358	2484
W2442UDWRR	2148	2163	2292	2292	2310	2358	2484
W2442UDWR-2B	2364	2379	2508	2508	2526	2574	2700
W2742UDWR-2B	2439	2454	2583	2583	2601	2649	2775
W3042UDWR-2B	2514	2529	2658	2658	2676	2724	2850
W3342UDWR-2B	2589	2604	2733	2733	2751	2799	2925
W3642UDWR-2B	2688	2703	2832	2832	2850	2898	3024
W1548UDWRL	2124	2139	2268	2268	2286	2334	2490
W1548UDWRR	2124	2139	2268	2268	2286	2334	2490
W1848UDWRL	2178	2193	2322	2322	2340	2388	2562
W1848UDWRR	2178	2193	2322	2322	2340	2388	2562
W2148UDWRL	2253	2268	2397	2397	2415	2463	2628
W2148UDWRR	2253	2268	2397	2397	2415	2463	2628
W2448UDWRL	2328	2343	2472	2472	2490	2538	2700
W2448UDWRR	2328	2343	2472	2472	2490	2538	2700
W2448UDWR-2B	2544	2559	2688	2688	2706	2754	3030
W2748UDWR-2B	2619	2634	2763	2763	2781	2829	3105
W3048UDWR-2B	2694	2709	2838	2838	2856	2904	3180
W3348UDWR-2B	2769	2784	2913	2913	2931	2979	3255
W3648UDWR-2B	2868	2883	3012	3012	3030	3078	3354
W1554UDWRL	2451	2466	2595	2595	2613	2661	2817
W1554UDWRR	2451	2466	2595	2595	2613	2661	2817
W1854UDWRL	2505	2520	2649	2649	2667	2715	2871
W1854UDWRR	2505	2520	2649	2649	2667	2715	2871
W2154UDWRL	2580	2595	2724	2724	2742	2790	2946
W2154UDWRR	2580	2595	2724	2724	2742	2790	2946
W2454UDWRL	2655	2670	2799	2799	2817	2865	3021
W2454UDWRR	2655	2670	2799	2799	2817	2865	3021
W2454UDWR-2B	2820	2835	2964	2964	2982	3030	3306
W2754UDWR-2B	2895	2910	3039	3039	3057	3105	3381
W3054UDWR-2B	2970	2985	3114	3114	3132	3180	3456
W3354UDWR-2B	3045	3060	3189	3189	3207	3255	3531
W3654UDWR-2B	3144	3159	3288	3288	3306	3354	3630

A-Bristol, Prairie, Savannah15
B-Plateau, Ridgegate, Summerhill
C-Augusta15, Bedford, Charleston15, Easton, Fairway, Gateway, Harbor, Hastings15, Liberty, Seneca, Vicksburg
D-Regency
E-
F-
G-Aspen15, Centennial15, Madison15, Norfolk15, Orleans, Riverton

SEE PAGE 54 FOR DOORS AVAILABLE IN MOLDED & PRICING

CABINET TYPE — WALLS

WALL WITH FULL EXTENSION DRAWER

THREE ADJUSTABLE SHELVES IN 57", & 60" TALL
SEE PAGE 27 FOR INFORMATION ON MULTI PANEL DOORS
DOVETAIL DRAWER WITH FULL EXTENSION UNDERMOUNT GUIDE

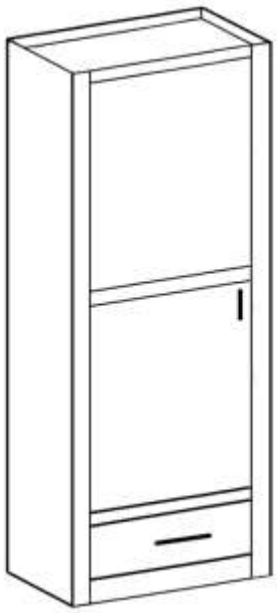

W1557UDWRL

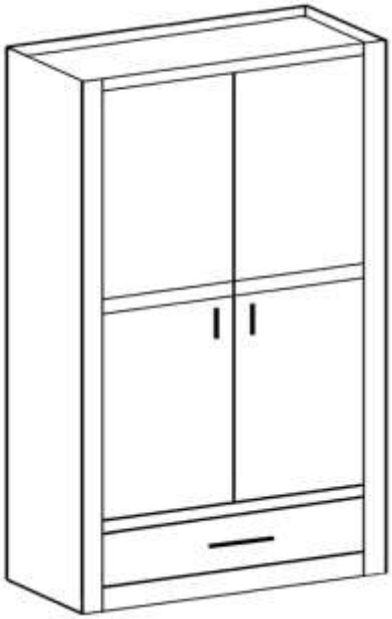

W2460UDWR-2B

DRAWER HAS FULL EXTENSION GUIDE
DRAWER OPENING IS 4 1/2" TALL
N/A OVER 36" WIDE OR LESS THAN 12" DEEP
54", 57" & 60" WILL HAVE TWO PANELS ON DOORS
756

12" DEEP CABINET	LIST PRICE						
	A	*B*	*C*	*D*	*E*	*F*	*G*
W1557UDWRL	2751	2766	2895	2895	2913	2964	3117
W1557UDWRR	2751	2766	2895	2895	2913	2964	3117
W1857UDWRL	2805	2820	2949	2949	2967	3018	3171
W1857UDWRR	2805	2820	2949	2949	2967	3018	3171
W2157UDWRL	2880	2895	3024	3024	3042	3093	3246
W2157UDWRR	2880	2895	3024	3024	3042	3093	3246
W2457UDWRL	2955	2970	3099	3099	3117	3168	3321
W2457UDWRR	2955	2970	3099	3099	3117	3168	3321
W2457UDWR-2B	3120	3135	3264	3264	3282	3333	3606
W2757UDWR-2B	3195	3210	3339	3339	3357	3408	3681
W3057UDWR-2B	3270	3285	3414	3414	3432	3483	3756
W3357UDWR-2B	3345	3360	3489	3489	3507	3558	3831
W3657UDWR-2B	3444	3459	3588	3588	3606	3657	3930
W1560UDWRL	2769	2784	2913	2913	2931	2982	3135
W1560UDWRR	2769	2784	2913	2913	2931	2982	3135
W1860UDWRL	2823	2838	2967	2967	2985	3036	3189
W1860UDWRR	2823	2838	2967	2967	2985	3036	3189
W2160UDWRL	2898	2913	3042	3042	3060	3111	3264
W2160UDWRR	2898	2913	3042	3042	3060	3111	3264
W2460UDWRL	2973	2988	3117	3117	3135	3186	3339
W2460UDWRR	2973	2988	3117	3117	3135	3186	3339
W2460UDWR-2B	3138	3153	3282	3282	3300	3351	3624
W2760UDWR-2B	3213	3228	3357	3357	3375	3426	3699
W3060UDWR-2B	3288	3303	3432	3432	3450	3501	3774
W3360UDWR-2B	3363	3378	3507	3507	3525	3576	3849
W3660UDWR-2B	3462	3477	3606	3606	3624	3675	3948

A-Bristol, Prairie, Savannah15
B-Plateau, Ridgegate, Summerhill
C-Augusta15, Bedford, Charleston15, Easton, Fairway, Gateway, Harbor, Hastings15, Liberty, Seneca, Vicksburg
D-Regency
E-
F-
G-Aspen15, Centennial15, Madison15, Norfolk15, Orleans, Riverton

SEE PAGE 54 FOR DOORS AVAILABLE IN MOLDED & PRICING

CABINET TYPE — WALLS

WALL CABINET WITH 2 FULL EXTENSION DRAWERS

TWO ADJUSTABLE SHELVES IN 48" TALL
THREE ADJUSTABLE SHELVES IN 54", 57", & 60" TALL
SEE PAGE 27 FOR INFORMATION ON MULTI PANEL DOORS
DOVETAIL DRAWER WITH FULL EXTENSION UNDERMOUNT GUIDE



W1848-2UDWRL



W2748-2UDWR-2B

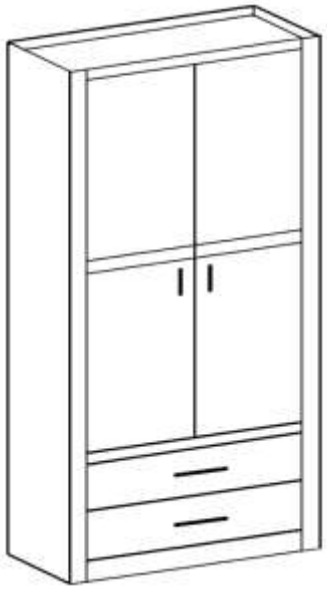

W2760-2UDWR-2B

DRAWER HAS FULL EXTENSION GUIDE
DRAWER OPENING IS 4 1/2" TALL
N/A OVER 36" WIDE OR LESS THAN 12" DEEP
60" WILL HAVE TWO PANELS ON DOORS

12" DEEP CABINET	LIST PRICE						
	A	*B*	*C*	*D*	*E*	*F*	*G*
W1548-2UDWRL	2484	2499	2673	2673	2691	2886	3075
W1548-2UDWRR	2484	2499	2673	2673	2691	2886	3075
W1848-2UDWRL	2538	2553	2727	2727	2745	2940	3147
W1848-2UDWRR	2538	2553	2727	2727	2745	2940	3147
W2148-2UDWRL	2613	2628	2802	2802	2820	3015	3213
W2148-2UDWRR	2613	2628	2802	2802	2820	3015	3213
W2448-2UDWRL	2688	2703	2877	2877	2895	3090	3285
W2448-2UDWRR	2688	2703	2877	2877	2895	3090	3285
W2448-2UDWR-2B	2904	2919	3093	3093	3111	3306	3615
W2748-2UDWR-2B	2979	2994	3168	3168	3186	3381	3690
W3048-2UDWR-2B	3054	3069	3243	3243	3261	3456	3765
W3348-2UDWR-2B	3129	3144	3318	3318	3336	3531	3840
W3648-2UDWR-2B	3228	3243	3417	3417	3435	3630	3939
W1554-2UDWRL	2709	2724	2898	2898	2916	3186	3315
W1554-2UDWRR	2709	2724	2898	2898	2916	3186	3315
W1854-2UDWRL	2763	2778	2952	2952	2970	3240	3369
W1854-2UDWRR	2763	2778	2952	2952	2970	3240	3369
W2154-2UDWRL	2838	2853	3027	3027	3045	3315	3444
W2154-2UDWRR	2838	2853	3027	3027	3045	3315	3444
W2454-2UDWRL	2913	2928	3102	3102	3120	3390	3519
W2454-2UDWRR	2913	2928	3102	3102	3120	3390	3519
W2454-2UDWR-2B	3129	3144	3318	3318	3336	3606	3855
W2754-2UDWR-2B	3204	3219	3393	3393	3411	3681	3930
W3054-2UDWR-2B	3279	3294	3468	3468	3486	3756	4005
W3354-2UDWR-2B	3354	3369	3543	3543	3561	3831	4080
W3654-2UDWR-2B	3453	3468	3642	3642	3660	3930	4179
W1557-2UDWRL	2949	2964	3138	3138	3156	3411	3525
W1557-2UDWRR	2949	2964	3138	3138	3156	3411	3525
W1857-2UDWRL	3003	3018	3192	3192	3210	3465	3579
W1857-2UDWRR	3003	3018	3192	3192	3210	3465	3579
W2157-2UDWRL	3078	3093	3267	3267	3285	3540	3654
W2157-2UDWRR	3078	3093	3267	3267	3285	3540	3654
W2457-2UDWRL	3153	3168	3342	3342	3360	3615	3729
W2457-2UDWRR	3153	3168	3342	3342	3360	3615	3729
W2457-2UDWR-2B	3369	3384	3558	3558	3576	3831	4065
W2757-2UDWR-2B	3444	3459	3633	3633	3651	3906	4140
W3057-2UDWR-2B	3519	3534	3708	3708	3726	3981	4215
W3357-2UDWR-2B	3594	3609	3783	3783	3801	4056	4290
W3657-2UDWR-2B	3693	3708	3882	3882	3900	4155	4389
W1560-2UDWRL	2967	2982	3156	3156	3174	3429	3543
W1560-2UDWRR	2967	2982	3156	3156	3174	3429	3543
W1860-2UDWRL	3021	3036	3210	3210	3228	3483	3597
W1860-2UDWRR	3021	3036	3210	3210	3228	3483	3597
W2160-2UDWRL	3096	3111	3285	3285	3303	3558	3672
W2160-2UDWRR	3096	3111	3285	3285	3303	3558	3672
W2460-2UDWRL	3171	3186	3360	3360	3378	3633	3747
W2460-2UDWRR	3171	3186	3360	3360	3378	3633	3747
W2460-2UDWR-2B	3387	3402	3576	3576	3594	3849	4083
W2760-2UDWR-2B	3462	3477	3651	3651	3669	3924	4158
W3060-2UDWR-2B	3537	3552	3726	3726	3744	3999	4233
W3360-2UDWR-2B	3612	3627	3801	3801	3819	4074	4308
W3660-2UDWR-2B	3711	3726	3900	3900	3918	4173	4407

A-Bristol, Prairie, Savannah15
B-Plateau, Ridgegate, Summerhill
C-Augusta15, Bedford, Charleston15, Easton, Fairway, Gateway, Harbor, Hastings15, Liberty, Seneca, Vicksburg
D-Regency
E-
F-
G-Aspen15, Centennial15, Madison15, Norfolk15, Orleans, Riverton

SEE PAGE 54 FOR DOORS AVAILABLE IN MOLDED & PRICING

CABINET TYPE — WALLS

WALL WITH 3 FULL EXTENSION DRAWERS

TWO ADJUSTABLE SHELVES IN 48" & 54" TALL
THREE ADJUSTABLE SHELVES IN 57" & 60" TALL
DOVETAIL DRAWER WITH FULL EXTENSION UNDERMOUNT GUIDE

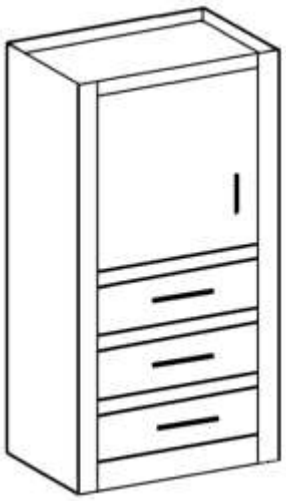

W1848-3UDWRL

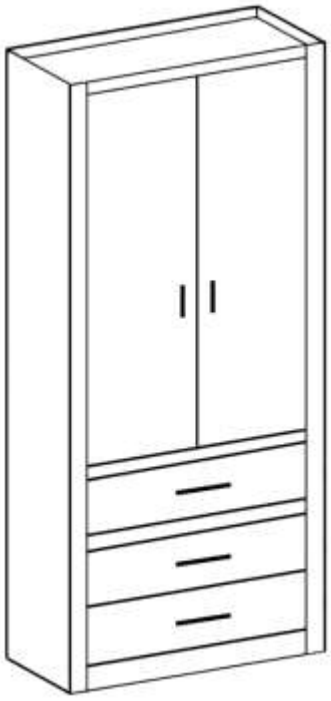

W3357-3UDWR-2B

DRAWER HAS FULL EXTENSION GUIDE
DRAWER OPENING IS 4 1/4" TALL
N/A OVER 36" WIDE OR LESS THAN 12" DEEP
N/A WITH 5 PIECE FRONTS ON STD OVERLAY

12" DEEP CABINET	LIST PRICE						
	A	*B*	*C*	*D*	*E*	*F*	*G*
W1848-3UDWRL	2892	2907	3174	3174	3213	3336	3750
W1848-3UDWRR	2892	2907	3174	3174	3213	3336	3750
W2148-3UDWRL	2928	2943	3219	3219	3264	3369	3780
W2148-3UDWRR	2928	2943	3219	3219	3264	3369	3780
W2448-3UDWRL	2964	2979	3264	3264	3300	3543	3948
W2448-3UDWRR	2964	2979	3264	3264	3300	3543	3948
W2448-3UDWR-2B	3096	3111	3342	3342	3378	3645	4050
W2748-3UDWR-2B	3162	3168	3396	3396	3495	3630	4086
W3048-3UDWR-2B	3315	3330	3516	3516	3582	3720	4224
W3348-3UDWR-2B	3351	3366	3549	3549	3606	3756	4209
W3648-3UDWR-2B	3372	3402	3585	3585	3642	3792	4245
W1854-3UDWRL	3045	3060	3327	3327	3366	3495	3903
W1854-3UDWRR	3045	3060	3327	3327	3366	3495	3903
W2154-3UDWRL	3081	3096	3372	3372	3417	3579	3933
W2154-3UDWRR	3081	3096	3372	3372	3417	3579	3933
W2454-3UDWRL	3117	3132	3417	3417	3453	3699	4101
W2454-3UDWRR	3117	3132	3417	3417	3453	3699	4101
W2454-3UDWR-2B	3300	3264	3495	3495	3531	3804	4203
W2754-3UDWR-2B	3315	3321	3549	3549	3648	3786	4356
W3054-3UDWR-2B	3468	3483	3669	3669	3735	3996	4392
W3354-3UDWR-2B	3504	3519	3702	3702	3810	4035	4428
W3654-3UDWR-2B	3540	3555	3738	3738	3846	4071	4464
W1857-3UDWRL	3198	3213	3480	3480	3519	3651	4056
W1857-3UDWRR	3198	3213	3480	3480	3519	3651	4056
W2157-3UDWRL	3234	3249	3525	3525	3570	3735	4086
W2157-3UDWRR	3234	3249	3525	3525	3570	3735	4086
W2457-3UDWRL	3270	3285	3570	3570	3606	3858	4254
W2457-3UDWRR	3270	3285	3570	3570	3606	3858	4254
W2457-3UDWR-2B	3453	3465	3672	3672	3684	3960	4356
W2757-3UDWR-2B	3468	3474	3702	3702	3801	3945	4458
W3057-3UDWR-2B	3621	3636	3873	3873	3888	4206	4575
W3357-3UDWR-2B	3657	3672	3855	3855	3924	4245	4581
W3657-3UDWR-2B	3693	3708	3891	3891	3957	4281	4617
W1860-3UDWRL	3216	3231	3498	3498	3537	3669	4074
W1860-3UDWRR	3216	3231	3498	3498	3537	3669	4074
W2160-3UDWRL	3252	3267	3543	3543	3588	3753	4104
W2160-3UDWRR	3252	3267	3543	3543	3588	3753	4104
W2460-3UDWRL	3288	3303	3588	3588	3624	3876	4272
W2460-3UDWRR	3288	3303	3588	3588	3624	3876	4272
W2460-3UDWR-2B	3471	3483	3690	3690	3702	3978	4374
W2760-3UDWR-2B	3486	3492	3720	3720	3819	3963	4476
W3060-3UDWR-2B	3639	3654	3891	3891	3906	4224	4593
W3360-3UDWR-2B	3675	3690	3873	3873	3942	4263	4599
W3660-3UDWR-2B	3711	3726	3909	3909	3975	4299	4635

A-Bristol, Prairie, Savannah15
B-Plateau, Ridgegate, Summerhill
C-Augusta15, Bedford, Charleston15, Easton, Fairway, Gateway, Harbor, Hastings15, Liberty, Seneca, Vicksburg
D-Regency
E-
F-
G-Aspen15, Centennial15, Madison15, Norfolk15, Orleans, Riverton

SEE PAGE 54 FOR DOORS AVAILABLE IN MOLDED & PRICING

CABINET TYPE — WALLS

WALL WITH APOTHECARY DRAWERS & DOORS

ONE ADJUSTABLE SHELF IN 30", & 36" TALL
TWO ADJUSTABLE SHELVES IN 39", 42", & 48" TALL

24", 27" & 30" HAVE FOUR DRAWERS
33" HAS FIVE DRAWERS AND A 36" HAS SIX DRAWERS

DRAWERS WILL HAVE SLAB FRONTS

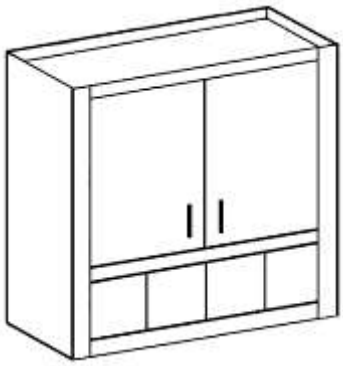

W2730AD-2B

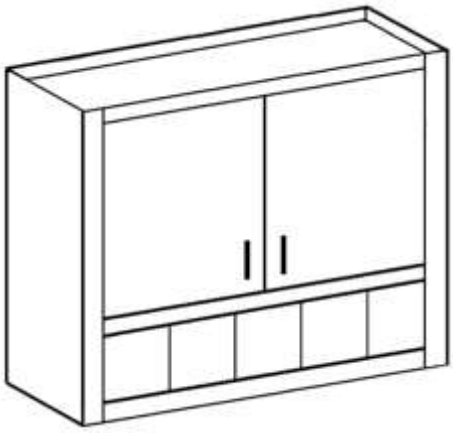

W3330AD-2B

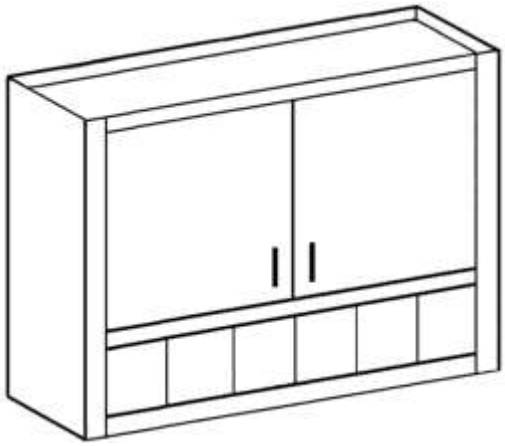

W3630AD-2B

NO GUIDES
5 3/4" TALL DRAWER OPENINGS
RECESSED DRAWER FRONTS WILL NOT MATCH OVERLAY OF DOORS
NO DRAWER WIDTH OR HEIGHT MODIFICATIONS ALLOWED

12" DEEP CABINET	LIST PRICE						
	A	*B*	*C*	*D*	*E*	*F*	*G*
W2430AD-2B	1749	1785	1944	1944	1983	2037	2274
W2730AD-2B	1995	2031	2100	2100	2142	2202	2463
W3030AD-2B	2382	2418	2652	2652	2694	2781	3111
W3330AD-2B	2418	2454	2703	2703	2745	2838	3171
W3630AD-2B	2448	2484	2739	2739	2784	2874	3219
W2436AD-2B	1968	2004	2187	2187	2229	2292	2565
W2736AD-2B	2235	2271	2520	2520	2559	2640	2952
W3036AD-2B	2622	2658	2937	2937	2979	3084	3453
W3336AD-2B	2661	2697	3000	3000	3039	3147	3519
W3636AD-2B	2697	2733	3045	3045	3087	3195	3576
W2439AD-2B	2163	2199	2427	2427	2469	2544	2847
W2739AD-2B	2448	2484	2703	2703	2745	2838	3171
W3039AD-2B	2841	2877	3147	3147	3189	3300	3699
W3339AD-2B	2886	2922	3207	3207	3255	3369	3768
W3639AD-2B	2928	2964	3264	3264	3306	3426	3834
W2442AD-2B	2391	2427	2658	2658	2697	2781	3075
W2742AD-2B	2679	2712	2934	2934	2973	3075	3402
W3042AD-2B	3069	3105	3375	3375	3417	3537	3927
W3342AD-2B	3117	3153	3438	3438	3483	3603	3999
W3642AD-2B	3156	3192	3495	3495	3534	3663	4065
W2448AD-2B	2409	2445	2676	2676	2715	2799	3093
W2748AD-2B	2697	2730	2952	2952	2991	3093	3420
W3048AD-2B	3087	3123	3393	3393	3435	3555	3945
W3348AD-2B	3135	3171	3456	3456	3501	3621	4017
W3648AD-2B	3174	3210	3513	3513	3552	3681	4083

A-Bristol, Prairie, Savannah15
B-Plateau, Ridgegate, Summerhill
C-Augusta15, Bedford, Charleston15, Easton, Fairway, Gateway, Harbor, Hastings15, Liberty, Seneca, Vicksburg
D-Regency
E-
F-
G-Aspen15, Centennial15, Madison15, Norfolk15, Orleans, Riverton

SEE PAGE 54 FOR DOORS AVAILABLE IN MOLDED & PRICING

CABINET TYPE — WALLS

WALL WITH APOTHECARY DRAWERS & NO DOORS

ONE ADJUSTABLE SHELF IN 30", & 36" TALL
TWO ADJUSTABLE SHELVES IN 39", 42", & 48" TALL

24" , 27" & 30" HAVE FOUR DRAWERS
33" HAS FIVE DRAWERS AND A 36" HAS SIX DRAWERS

DRAWERS WILL HAVE SLAB FRONTS

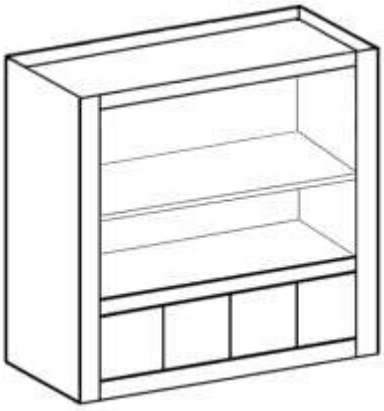

W2430ADND



W3336ADND (without shelf installed)

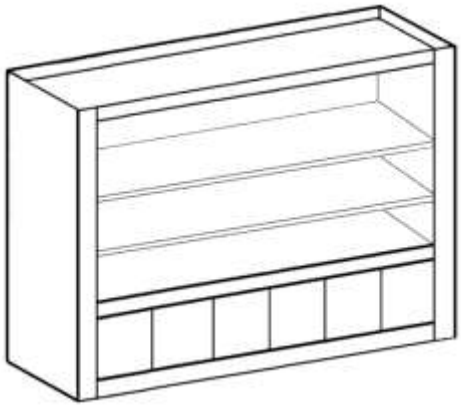

W3639ADND

NO GUIDES
5 3/4" TALL DRAWER OPENINGS
RECESSED DRAWER FRONTS WILL NOT MATCH OVERLAY OF DOORS
NO WIDTH MODIFICATIONS ALLOWED
NO DRAWER HEIGHT OR WIDTH MODIFICATIONS ALLOWED
FINISHED INTERIOR OF SHELF SECTION

12" DEEP CABINET	LIST PRICE						
	A	*B*	*C*	*D*	*E*	*F*	*G*
W2430ADND	2208	2244	2478	2478	2520	2604	2928
W2730ADND	2454	2490	2637	2637	2682	2772	3117
W3030ADND	2841	2877	3138	3138	3177	3297	3702
W3330ADND	2877	2913	3189	3189	3228	3351	3765
W3630ADND	2958	2994	3222	3222	3270	3393	3810
W2436ADND	2478	2514	2724	2724	2769	2862	3219
W2736ADND	2745	2781	3054	3054	3096	3213	3606
W3036ADND	3081	3117	3423	3423	3462	3597	4038
W3336ADND	3120	3156	3477	3477	3525	3660	4110
W3636ADND	3156	3192	3528	3528	3570	3711	4167
W2439ADND	2733	2769	2979	2979	3024	3123	3474
W2739ADND	3000	3036	3309	3309	3351	3477	3861
W3039ADND	3336	3372	3678	3678	3717	3858	4293
W3339ADND	3375	3411	3732	3732	3780	3921	4365
W3639ADND	3411	3447	3783	3783	3825	3975	4422
W2442ADND	2751	2787	2997	2997	3042	3141	3492
W2742ADND	3018	3054	3327	3327	3369	3495	3879
W3042ADND	3354	3390	3696	3696	3735	3876	4311
W3342ADND	3393	3429	3750	3750	3798	3939	4383
W3642ADND	3429	3465	3801	3801	3843	3993	4440
W2448ADND	2988	3024	3234	3234	3279	3387	3729
W2748ADND	3255	3291	3564	3564	3606	3738	4116
W3048ADND	3591	3627	3933	3933	3972	4122	4548
W3348ADND	3630	3666	3987	3987	4035	4185	4620
W3648ADND	3666	3702	4038	4038	4080	4236	4677

A-Bristol, Prairie, Savannah15
B-Plateau, Ridgegate, Summerhill
C-Augusta15, Bedford, Charleston15, Easton, Fairway, Gateway, Harbor, Hastings15, Liberty, Seneca, Vicksburg
D-Regency
E-
F-
G-Aspen15, Centennial15, Madison15, Norfolk15, Orleans, Riverton

SEE PAGE 54 FOR DOORS AVAILABLE IN MOLDED & PRICING

CABINET TYPE — WALLS

DIAGONAL ANGLE WALL

TWO ADJUSTABLE SHELVES IN 30", & 36" TALL
THREE ADJUSTABLE SHELVES IN 39", 42", & 48" TALL

NO MODIFICATIONS TO WIDTH
51" IS MAXIMUM HEIGHT

2 1/2" STILES

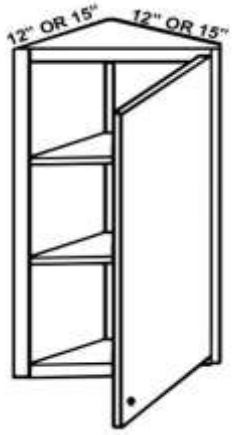

W1230DIAR

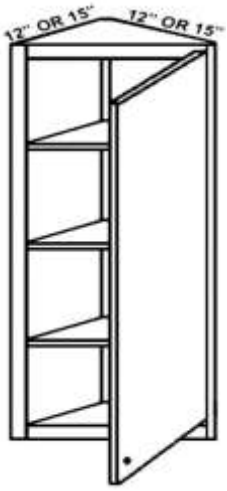

W1239DIAR

W12'S REQUIRE 12" OF WALL SPACE FOR INSTALLATION
W15'S REQUIRE 15" OF WALL SPACE FOR INSTALLATION

12" DEEP CABINET	LIST PRICE						
	A	*B*	*C*	*D*	*E*	*F*	*G*
W1230DIAL	894	927	1092	1092	1125	1173	1278
W1230DIAR	894	927	1092	1092	1125	1173	1278
W1236DIAL	1062	1098	1302	1302	1335	1383	1530
W1236DIAR	1062	1098	1302	1302	1335	1383	1530
W1239DIAL	1224	1275	1515	1515	1548	1596	1782
W1239DIAR	1224	1275	1515	1515	1548	1596	1782
W1242DIAL	1242	1293	1533	1533	1566	1614	1800
W1242DIAR	1242	1293	1533	1533	1566	1614	1800
W1248DIAL	1413	1476	1752	1752	1785	1833	2058
W1248DIAR	1413	1476	1752	1752	1785	1833	2058

15" DEEP CABINET	LIST PRICE						
	A	*B*	*C*	*D*	*E*	*F*	*G*
W1530DIAL	1122	1158	1320	1320	1353	1401	1509
W1530DIAR	1122	1158	1320	1320	1353	1401	1509
W1536DIAL	1290	1521	1530	1530	1563	1611	1761
W1536DIAR	1290	1521	1530	1530	1563	1611	1761
W1539DIAL	1455	1683	1743	1743	1776	1824	2010
W1539DIAR	1455	1683	1743	1743	1776	1824	2010
W1542DIAL	1473	1701	1761	1761	1794	1842	2028
W1542DIAR	1473	1701	1761	1761	1794	1842	2028
W1548DIAL	1644	1872	1980	1980	2013	2061	2286
W1548DIAR	1644	1872	1980	1980	2013	2061	2286

V ANGLE WALL

TWO ADJUSTABLE SHELVES IN 30" & 36" TALL
THREE ADJUSTABLE SHELVES IN 39", 42", & 48" TALL

NO MODIFICATIONS TO WIDTH
51" IS MAXIMUM HEIGHT

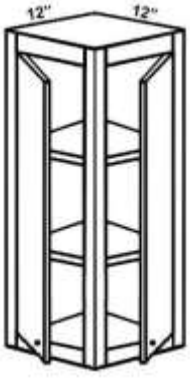

W1230V

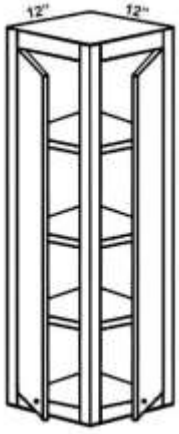

W1239V

W12'S REQUIRE 12" OF WALL SPACE FOR INSTALLATION

12" DEEP CABINET	LIST PRICE						
	A	*B*	*C*	*D*	*E*	*F*	*G*
W1230V	945	978	1140	1140	1179	1194	1329
W1236V	1113	1149	1353	1353	1392	1416	1581
W1239V	1275	1311	1566	1566	1608	1641	1833
W1242V	1293	1329	1584	1584	1626	1659	1851
W1248V	1491	1527	1830	1830	1866	1914	2130

A-Bristol, Prairie, Savannah15
B-Plateau, Ridgegate, Summerhill
C-Augusta15, Bedford, Charleston15, Easton, Fairway, Gateway, Harbor, Hastings15, Liberty, Seneca, Vicksburg
D-Regency
E-
F-
G-Aspen15, Centennial15, Madison15, Norfolk15, Orleans, Riverton

SEE PAGE 54 FOR DOORS AVAILABLE IN MOLDED & PRICING

CABINET TYPE

WALL DOUBLE SECTION

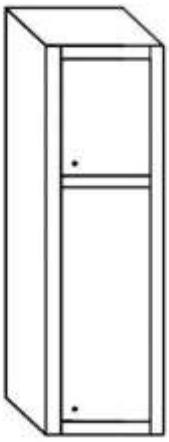

W942DSR

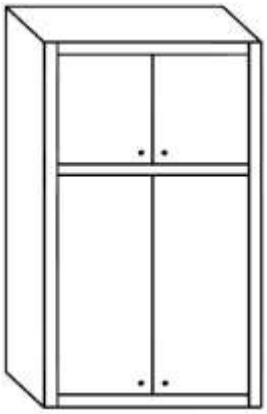

W2742DS-4B

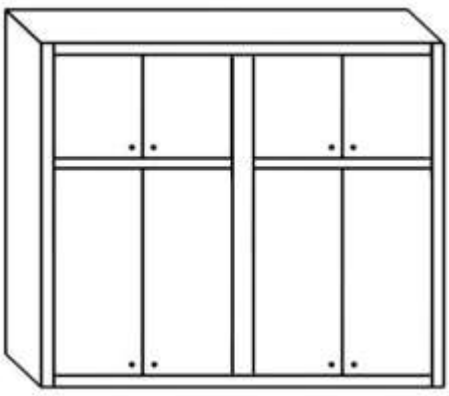

W4842DS-8B

ANY CHANGES TO STANDARD OPENINGS IS AN ADDITIONAL CHARGE.

IF FINISHED INTERIOR IS ORDERED, THE ENTIRE CABINET WILL HAVE A FINISHED INTERIOR. OPTION TO HAVE ONLY THE TOP OR BOTTOM FINISHED IS NOT AVAILABLE. SEE PAGE 359 FOR PRICING.

WALLS

WALL DOUBLE SECTION - 8 1/2" UPPER SECTION

1 3/4" CENTER RAIL
8 1/2" UPPER OPENING WITH NO SHELVES
28 1/4" LOWER OPENING WITH TWO SHELVES

12" DEEP CABINET	LIST PRICE						
	A	*B*	*C*	*D*	*E*	*F*	*G*
W942DSL	1647	1674	1794	1794	1863	1887	2106
W942DSR	1647	1674	1794	1794	1863	1887	2106
W1242DSL	1698	1725	1851	1851	1914	1941	2169
W1242DSR	1698	1725	1851	1851	1914	1941	2169
W1542DSL	1749	1776	1902	1902	1968	1998	2229
W1542DSR	1749	1776	1902	1902	1968	1998	2229
W1842DSL	1800	1827	1959	1959	2019	2052	2295
W1842DSR	1800	1827	1959	1959	2019	2052	2295
W2142DSL	1851	1878	2010	2010	2076	2112	2355
W2142DSR	1851	1878	2010	2010	2076	2112	2355
W2442DSL	1902	1929	2067	2067	2127	2166	2418
W2442DSR	1902	1929	2067	2067	2127	2166	2418
W2442DS-4B	2157	2184	2322	2322	2382	2424	2673
W2742DS-4B	2193	2214	2418	2418	2499	2529	2814
W3042DS-4B	2229	2244	2493	2493	2577	2613	2913
W3342DS-4B	2304	2322	2577	2577	2658	2697	3003
W3642DS-4B	2382	2397	2658	2658	2739	2781	3102
W3942DS-4B	2457	2475	2739	2739	2817	2865	3198
W4242DS-4B	2535	2550	2817	2817	2898	2949	3291
W4542DS-4B	2610	2628	2898	2898	2979	3033	3387
W4842DS-8B	2892	2907	3183	3183	3261	3318	3684

WALL DOUBLE SECTION - 14 1/2" UPPER SECTION

1 3/4" CENTER RAIL
14 1/2" UPPER OPENING WITH NO SHELVES
28 1/4" LOWER OPENING WITH TWO SHELVES

12" DEEP CABINET	LIST PRICE						
	A	*B*	*C*	*D*	*E*	*F*	*G*
W948DSL	1797	1824	1944	1944	2013	2037	2256
W948DSR	1797	1824	1944	1944	2013	2037	2256
W1248DSL	1848	1875	2001	2001	2064	2091	2319
W1248DSR	1848	1875	2001	2001	2064	2091	2319
W1548DSL	1899	1926	2052	2052	2118	2148	2379
W1548DSR	1899	1926	2052	2052	2118	2148	2379
W1848DSL	1950	1977	2109	2109	2169	2202	2445
W1848DSR	1950	1977	2109	2109	2169	2202	2445
W2148DSL	2001	2028	2160	2160	2226	2262	2505
W2148DSR	2001	2028	2160	2160	2226	2262	2505
W2448DSL	2052	2079	2217	2217	2277	2316	2568
W2448DSR	2052	2079	2217	2217	2277	2316	2568
W2448DS-4B	2307	2334	2472	2472	2532	2574	2823
W2748DS-4B	2343	2364	2568	2568	2649	2679	2964
W3048DS-4B	2379	2394	2643	2643	2727	2763	3063
W3348DS-4B	2454	2472	2727	2727	2808	2847	3153
W3648DS-4B	2532	2547	2808	2808	2889	2931	3252
W3948DS-4B	2607	2625	2889	2889	2967	3015	3348
W4248DS-4B	2685	2700	2967	2967	3048	3099	3441
W4548DS-4B	2760	2778	3048	3048	3129	3183	3537
W4848DS-8B	3042	3057	3333	3333	3411	3468	3834

A-Bristol, Prairie, Savannah15
B-Plateau, Ridgegate, Summerhill
C-Augusta15, Bedford, Charleston15, Easton, Fairway, Gateway, Harbor, Hastings15, Liberty, Seneca, Vicksburg
D-Regency
E-
F-
G-Aspen15, Centennial15, Madison15, Norfolk15, Orleans, Riverton

SEE PAGE 54 FOR DOORS AVAILABLE IN MOLDED & PRICING

CABINET TYPE

WALL DOUBLE SECTION

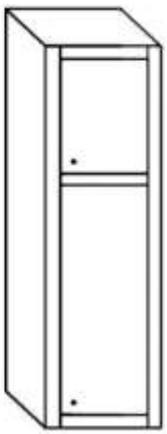

W954DSR

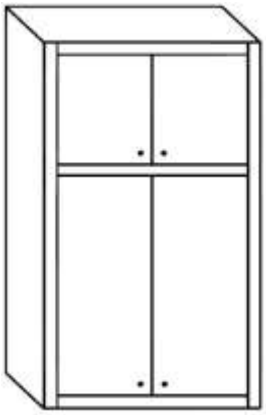

W3654DS-4B

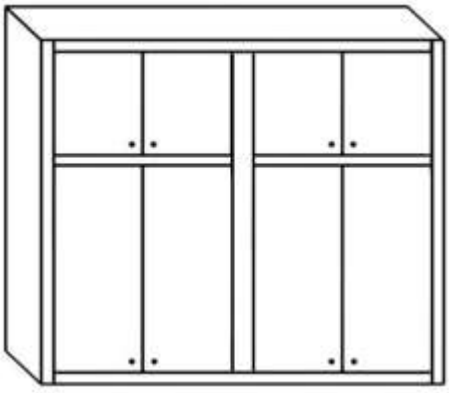

W4854DS-8B

ANY CHANGES TO STANDARD OPENINGS IS AN ADDITIONAL CHARGE.

IF FINISHED INTERIOR IS ORDERED, THE ENTIRE CABINET WILL HAVE A FINISHED INTERIOR. OPTION TO HAVE ONLY THE TOP OR BOTTOM FINISHED IS NOT AVAILABLE.

WALLS

WALL DOUBLE SECTION 14 1/2" UPPER SECTION

1 3/4" CENTER RAIL
14 1/2" UPPER OPENING WITH NO SHELVES
31 1/4" LOWER OPENING WITH TWO SHELVES

12" DEEP CABINET	LIST PRICE						
	A	*B*	*C*	*D*	*E*	*F*	*G*
W951DSL	1887	1914	2034	2034	2103	2127	2346
W951DSR	1887	1914	2034	2034	2103	2127	2346
W1251DSL	1938	1965	2091	2091	2154	2181	2409
W1251DSR	1938	1965	2091	2091	2154	2181	2409
W1551DSL	1989	2016	2142	2142	2208	2238	2469
W1551DSR	1989	2016	2142	2142	2208	2238	2469
W1851DSL	2040	2067	2199	2199	2259	2292	2535
W1851DSR	2040	2067	2199	2199	2259	2292	2535
W2151DSL	2091	2118	2250	2250	2316	2352	2595
W2151DSR	2091	2118	2250	2250	2316	2352	2595
W2451DSL	2142	2169	2307	2307	2367	2406	2658
W2451DSR	2142	2169	2307	2307	2367	2406	2658
W2451DS-4B	2397	2424	2562	2562	2622	2664	2913
W2751DS-4B	2433	2454	2658	2658	2739	2769	3054
W3051DS-4B	2469	2484	2733	2733	2817	2853	3153
W3351DS-4B	2544	2562	2817	2817	2898	2937	3243
W3651DS-4B	2622	2637	2898	2898	2979	3021	3342
W3951DS-4B	2697	2715	2979	2979	3057	3105	3438
W4251DS-4B	2775	2790	3057	3057	3138	3189	3531
W4551DS-4B	2850	2868	3138	3138	3219	3273	3627
W4851DS-8B	3132	3147	3423	3423	3501	3558	3924

WALL DOUBLE SECTION 14 1/2" UPPER SECTION

1 3/4" CENTER RAIL
14 1/2" UPPER OPENING WITH NO SHELVES
34 1/4" LOWER OPENING WITH TWO SHELVES

12" DEEP CABINET	LIST PRICE						
	A	*B*	*C*	*D*	*E*	*F*	*G*
W954DSL	1947	1974	2094	2094	2163	2187	2406
W954DSR	1947	1974	2094	2094	2163	2187	2406
W1254DSL	1998	2025	2151	2151	2214	2241	2469
W1254DSR	1998	2025	2151	2151	2214	2241	2469
W1554DSL	2049	2076	2202	2202	2268	2298	2529
W1554DSR	2049	2076	2202	2202	2268	2298	2529
W1854DSL	2100	2127	2259	2259	2319	2352	2595
W1854DSR	2100	2127	2259	2259	2319	2352	2595
W2154DSL	2151	2178	2310	2310	2376	2412	2655
W2154DSR	2151	2178	2310	2310	2376	2412	2655
W2454DSL	2202	2229	2367	2367	2427	2466	2718
W2454DSR	2202	2229	2367	2367	2427	2466	2718
W2454DS-4B	2457	2484	2622	2622	2682	2724	2973
W2754DS-4B	2493	2514	2718	2718	2799	2829	3114
W3054DS-4B	2529	2544	2793	2793	2877	2913	3213
W3354DS-4B	2604	2622	2877	2877	2958	2997	3303
W3654DS-4B	2682	2697	2958	2958	3039	3081	3402
W3954DS-4B	2757	2775	3039	3039	3117	3165	3498
W4254DS-4B	2835	2850	3117	3117	3198	3249	3591
W4554DS-4B	2910	2928	3198	3198	3279	3333	3687
W4854DS-8B	3192	3207	3483	3483	3561	3618	3984

A-Bristol, Prairie, Savannah15
B-Plateau, Ridgegate, Summerhill
C-Augusta15, Bedford, Charleston15, Easton, Fairway, Gateway, Harbor, Hastings15, Liberty, Seneca, Vicksburg
D-Regency
E-
F-
G-Aspen15, Centennial15, Madison15, Norfolk15, Orleans, Riverton

SEE PAGE 54 FOR DOORS AVAILABLE IN MOLDED & PRICING

CABINET TYPE

WALL DOUBLE SECTION

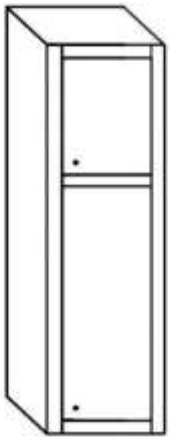

W960DSR

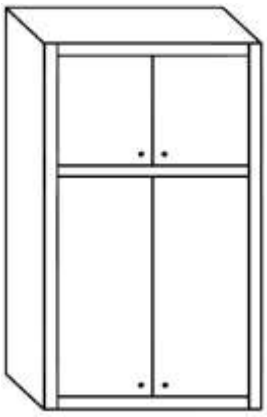

W2460DS-4B

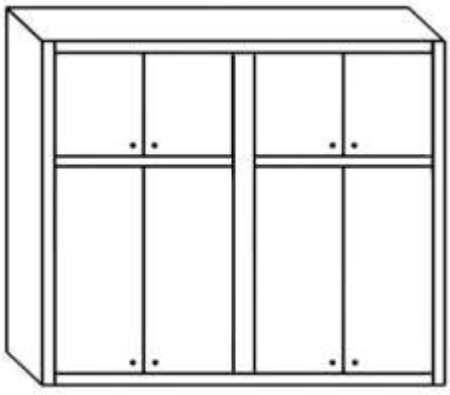

W4860DS-8B

ANY CHANGES TO STANDARD OPENINGS IS AN ADDITIONAL CHARGE.

IF FINISHED INTERIOR IS ORDERED, THE ENTIRE CABINET WILL HAVE A FINISHED INTERIOR. OPTION TO HAVE ONLY THE TOP OR BOTTOM FINISHED IS NOT AVAILABLE.

WALLS

WALL DOUBLE SECTION 17 1/2" UPPER SECTION

1 3/4" CENTER RAIL
17 1/2" UPPER OPENING WITH NO SHELVES
34 1/4" LOWER OPENING WITH TWO SHELVES

12" DEEP CABINET	LIST PRICE						
	A	*B*	*C*	*D*	*E*	*F*	*G*
W957DSL	2097	2124	2244	2244	2313	2337	2556
W957DSR	2097	2124	2244	2244	2313	2337	2556
W1257DSL	2148	2175	2301	2301	2364	2391	2619
W1257DSR	2148	2175	2301	2301	2364	2391	2619
W1557DSL	2199	2226	2352	2352	2418	2448	2679
W1557DSR	2199	2226	2352	2352	2418	2448	2679
W1857DSL	2250	2277	2409	2409	2469	2502	2745
W1857DSR	2250	2277	2409	2409	2469	2502	2745
W2157DSL	2301	2328	2460	2460	2526	2562	2805
W2157DSR	2301	2328	2460	2460	2526	2562	2805
W2457DSL	2352	2379	2517	2517	2577	2616	2868
W2457DSR	2352	2379	2517	2517	2577	2616	2868
W2457DS-4B	2607	2634	2772	2772	2832	2874	3123
W2757DS-4B	2643	2664	2868	2868	2949	2979	3264
W3057DS-4B	2679	2694	2943	2943	3027	3063	3363
W3357DS-4B	2754	2772	3027	3027	3108	3147	3453
W3657DS-4B	2832	2847	3108	3108	3189	3231	3552
W3957DS-4B	2907	2925	3189	3189	3267	3315	3648
W4257DS-4B	2985	3000	3267	3267	3348	3399	3741
W4557DS-4B	3060	3078	3348	3348	3429	3483	3837
W4857DS-8B	3342	3357	3633	3633	3711	3768	4134

WALL DOUBLE SECTION 20 1/2" UPPER SECTION

1 3/4" CENTER RAIL
20 1/2" UPPER OPENING WITH ONE SHELF
34 1/4" LOWER OPENING WITH TWO SHELVES

12" DEEP CABINET	LIST PRICE						
	A	*B*	*C*	*D*	*E*	*F*	*G*
W960DSL	2247	2274	2394	2394	2463	2487	2706
W960DSR	2247	2274	2394	2394	2463	2487	2706
W1260DSL	2298	2325	2451	2451	2514	2541	2769
W1260DSR	2298	2325	2451	2451	2514	2541	2769
W1560DSL	2349	2376	2502	2502	2568	2598	2829
W1560DSR	2349	2376	2502	2502	2568	2598	2829
W1860DSL	2400	2427	2559	2559	2619	2652	2895
W1860DSR	2400	2427	2559	2559	2619	2652	2895
W2160DSL	2451	2478	2610	2610	2676	2712	2955
W2160DSR	2451	2478	2610	2610	2676	2712	2955
W2460DSL	2502	2529	2667	2667	2727	2766	3018
W2460DSR	2502	2529	2667	2667	2727	2766	3018
W2460DS-4B	2757	2784	2922	2922	2982	3024	3273
W2760DS-4B	2793	2814	3018	3018	3099	3129	3414
W3060DS-4B	2829	2844	3093	3093	3177	3213	3513
W3360DS-4B	2904	2922	3177	3177	3258	3297	3603
W3660DS-4B	2982	2997	3258	3258	3339	3381	3702
W3960DS-4B	3057	3075	3339	3339	3417	3465	3798
W4260DS-4B	3135	3150	3417	3417	3498	3549	3891
W4560DS-4B	3210	3228	3498	3498	3579	3633	3987
W4860DS-8B	3492	3507	3783	3783	3861	3918	4284

SEE PAGE 54 FOR DOORS AVAILABLE IN MOLDED & PRICING

CABINET TYPE

WALL DOUBLE SECTION - EASY REACH CABINET

THE 24" WIDE REQUIRES 24" OF WALL SPACE FOR INSTALLATION
THE 27" WIDE REQUIRES 27" OF WALL SPACE FOR INSTALLATION

NOT AVAILABLE WITH SOFT CLOSE HINGES
1 3/4" CENTER RAIL

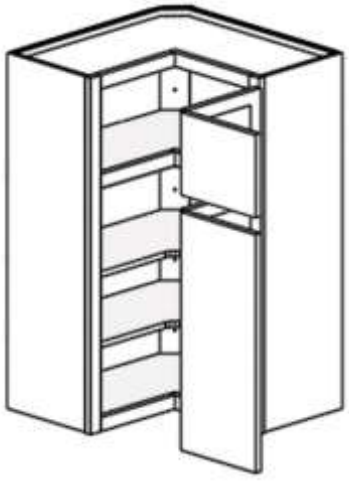

WER2448DSR

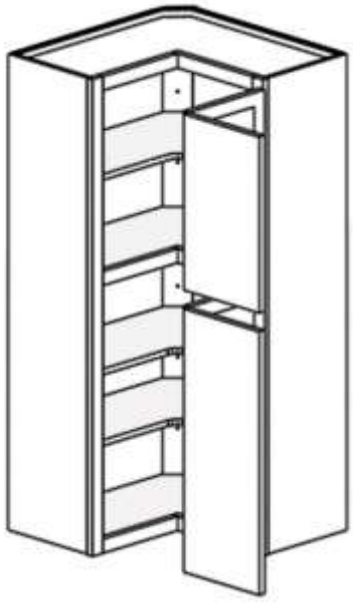

WER2460DSR

ANY CHANGES TO STANDARD OPENINGS IS AN ADDITIONAL CHARGE.

IF FINISHED INTERIOR IS ORDERED, THE ENTIRE CABINET WILL HAVE A FINISHED INTERIOR. OPTION TO HAVE ONLY THE TOP OR BOTTOM FINISHED IS NOT AVAILABLE.

WALLS

WALL DOUBLE SECTIONS - 8 1/2" UPPER SECTION

8 1/2" UPPER OPENING WITH NO SHELVES
28 1/4" LOWER OPENING WITH TWO SHELVES

12" DEEP CABINET	LIST PRICE						
	A	*B*	*C*	*D*	*E*	*F*	*G*
WER2442DSL	1728	1785	1953	1953	2022	2058	2319
WER2442DSR	1728	1785	1953	1953	2022	2058	2319
15" DEEP CABINET	**LIST PRICE**						
	A	*B*	*C*	*D*	*E*	*F*	*G*
WER2742U15DSL	2229	2280	2448	2448	2520	2568	2817
WER2742U15DSR	2229	2280	2448	2448	2520	2568	2817

WALL DOUBLE SECTIONS - 14 1/2" UPPER SECTION

14 1/2" UPPER OPENING WITH NO SHELVES
28 1/4" LOWER OPENING WITH TWO SHELVES

12" DEEP CABINET	LIST PRICE						
	A	*B*	*C*	*D*	*E*	*F*	*G*
WER2448DSL	1758	1815	1998	1998	2067	2103	2364
WER2448DSR	1758	1815	1998	1998	2067	2103	2364
15" DEEP CABINET	**LIST PRICE**						
	A	*B*	*C*	*D*	*E*	*F*	*G*
WER2748U15DSL	2259	2310	2493	2493	2565	2613	2862
WER2748U15DSR	2259	2310	2493	2493	2565	2613	2862

14 1/2" UPPER OPENING WITH NO SHELVES
31 1/4" LOWER OPENING WITH TWO SHELVES

12" DEEP CABINET	LIST PRICE						
	A	*B*	*C*	*D*	*E*	*F*	*G*
WER2451DSL	1788	1845	2043	2043	2112	2148	2409
WER2451DSR	1788	1845	2043	2043	2112	2148	2409
15" DEEP CABINET	**LIST PRICE**						
	A	*B*	*C*	*D*	*E*	*F*	*G*
WER2751U15DSL	2289	2340	2538	2538	2610	2658	2907
WER2751U15DSR	2289	2340	2538	2538	2610	2658	2907

14 1/2" UPPER OPENING WITH NO SHELVES
34 1/4" LOWER OPENING WITH TWO SHELVES

12" DEEP CABINET	LIST PRICE						
	A	*B*	*C*	*D*	*E*	*F*	*G*
WER2454DSL	1809	1866	2079	2079	2145	2187	2457
WER2454DSR	1809	1866	2079	2079	2145	2187	2457
15" DEEP CABINET	**LIST PRICE**						
	A	*B*	*C*	*D*	*E*	*F*	*G*
WER2754U15DSL	2310	2361	2574	2574	2640	2694	2952
WER2754U15DSR	2310	2361	2574	2574	2640	2694	2952

17 1/2" UPPER OPENING WITH NO SHELVES
34 1/4" LOWER OPENING WITH TWO SHELVES

12" DEEP CABINET	LIST PRICE						
	A	*B*	*C*	*D*	*E*	*F*	*G*
WER2457DSL	1836	1890	2118	2118	2184	2235	2502
WER2457DSR	1836	1890	2118	2118	2184	2235	2502
15" DEEP CABINET	**LIST PRICE**						
	A	*B*	*C*	*D*	*E*	*F*	*G*
WER2757U15DSL	2337	2385	2613	2613	2679	2736	2997
WER2757U15DSR	2337	2385	2613	2613	2679	2736	2997

20 1/2" UPPER OPENING WITH ONE SHELF
34 1/4" LOWER OPENING WITH TWO SHELVES

12" DEEP CABINET	LIST PRICE						
	A	*B*	*C*	*D*	*E*	*F*	*G*
WER2460DSL	2136	2175	2469	2469	2544	2610	2922
WER2460DSR	2136	2175	2469	2469	2544	2610	2922
15" DEEP CABINET	**LIST PRICE**						
	A	*B*	*C*	*D*	*E*	*F*	*G*
WER2760U15DSL	2727	2769	3048	3048	3129	3174	3492
WER2760U15DSR	2727	2769	3048	3048	3129	3174	3492

A-Bristol, Prairie, Savannah15
B-Plateau, Ridgegate, Summerhill
C-Augusta15, Bedford, Charleston15, Easton, Fairway, Gateway, Harbor, Hastings15, Liberty, Seneca, Vicksburg
D-Regency
E-
F-
G-Aspen15, Centennial15, Madison15, Norfolk15, Orleans, Riverton

SEE PAGE 54 FOR DOORS AVAILABLE IN MOLDED & PRICING

CABINET TYPE

WALL DOUBLE SECTION - BLIND CORNER WALL

CAN PULL 4"

SEE PAGE 360 FOR FINISH ON BLIND OPENING

SINGLE DOOR CABINETS COME AUTOMATICALLY HINGED TO BLIND SIDE
L AND R REPRESENT BLIND PLACEMENT



WC2448DSL



WC3648DS-4BL

ANY CHANGES TO STANDARD OPENINGS IS AN ADDITIONAL CHARGE.
IF FINISHED INTERIOR IS ORDERED, THE ENTIRE CABINET WILL HAVE A FINISHED INTERIOR. OPTION TO HAVE ONLY THE TOP OR BOTTOM FINISHED IS NOT AVAILABLE.

WALLS

WALL DOUBLE SECTION - 8 1/2" UPPER SECTION

1 3/4" CENTER RAIL
8 1/2" UPPER OPENING WITH NO SHELVES
28 1/4" LOWER OPENING WITH TWO SHELVES

12" DEEP CABINET	LIST PRICE						
	A	*B*	*C*	*D*	*E*	*F*	*G*
WC2442DSL	1887	1914	2052	2052	2112	2151	2403
WC2442DSR	1887	1914	2052	2052	2112	2151	2403
WC2742DSL	1932	1950	2193	2193	2274	2304	2577
WC2742DSR	1932	1950	2193	2193	2274	2304	2577
WC3042DSL	2010	2025	2274	2274	2352	2388	2667
WC3042DSR	2010	2025	2274	2274	2352	2388	2667
WC3342DSL	2085	2103	2352	2352	2433	2472	2766
WC3342DSR	2085	2103	2352	2352	2433	2472	2766
WC3642DSL	2163	2178	2433	2433	2514	2550	2856
WC3642DSR	2163	2178	2433	2433	2514	2550	2856
WC3642DS-4BL	2367	2382	2643	2643	2724	2766	3087
WC3642DS-4BR	2367	2382	2643	2643	2724	2766	3087
WC3942DS-4BL	2442	2460	2724	2724	2802	2850	3183
WC3942DS-4BR	2442	2460	2724	2724	2802	2850	3183
WC4242DS-4BL	2520	2535	2802	2802	2883	2934	3276
WC4242DS-4BR	2520	2535	2802	2802	2883	2934	3276
WC4542DS-4BL	2595	2613	2883	2883	2964	3018	3372
WC4542DS-4BR	2595	2613	2883	2883	2964	3018	3372
WC4842DS-4BL	2673	2688	2964	2964	3042	3099	3465
WC4842DS-4BR	2673	2688	2964	2964	3042	3099	3465

WALL DOUBLE SECTION - 14 1/2" UPPER SECTION

1 3/4" CENTER RAIL
14 1/2" UPPER OPENING WITH NO SHELVES
28 1/4" LOWER OPENING WITH TWO SHELVES

12" DEEP CABINET	LIST PRICE						
	A	*B*	*C*	*D*	*E*	*F*	*G*
WC2448DSL	2037	2064	2202	2202	2262	2301	2553
WC2448DSR	2037	2064	2202	2202	2262	2301	2553
WC2748DSL	2082	2100	2343	2343	2424	2454	2727
WC2748DSR	2082	2100	2343	2343	2424	2454	2727
WC3048DSL	2160	2175	2424	2424	2502	2538	2817
WC3048DSR	2160	2175	2424	2424	2502	2538	2817
WC3348DSL	2235	2253	2502	2502	2583	2622	2916
WC3348DSR	2235	2253	2502	2502	2583	2622	2916
WC3648DSL	2313	2328	2583	2583	2664	2700	3006
WC3648DSR	2313	2328	2583	2583	2664	2700	3006
WC3648DS-4BL	2517	2532	2793	2793	2874	2916	3237
WC3648DS-4BR	2517	2532	2793	2793	2874	2916	3237
WC3948DS-4BL	2592	2610	2874	2874	2952	3000	3333
WC3948DS-4BR	2592	2610	2874	2874	2952	3000	3333
WC4248DS-4BL	2670	2685	2952	2952	3033	3084	3426
WC4248DS-4BR	2670	2685	2952	2952	3033	3084	3426
WC4548DS-4BL	2745	2763	3033	3033	3114	3168	3522
WC4548DS-4BR	2745	2763	3033	3033	3114	3168	3522
WC4848DS-4BL	2823	2838	3114	3114	3192	3249	3615
WC4848DS-4BR	2823	2838	3114	3114	3192	3249	3615

SEE PAGE 54 FOR DOORS AVAILABLE IN MOLDED & PRICING

CABINET TYPE

WALL DOUBLE SECTION - BLIND CORNER WALL

CAN PULL 4"

SEE PAGE 360 FOR FINISH ON BLIND OPENING

SINGLE DOOR CABINETS COME AUTOMATICALLY HINGED TO BLIND SIDE
L AND R REPRESENT BLIND PLACEMENT

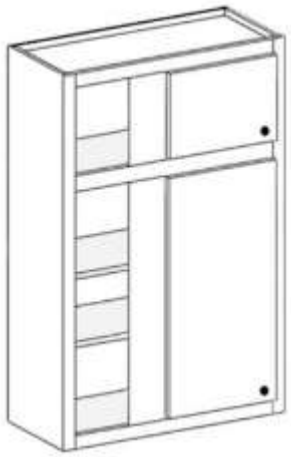

WC2454DSL



WC3654DS-4BL

ANY CHANGES TO STANDARD OPENINGS IS AN ADDITIONAL CHARGE.
IF FINISHED INTERIOR IS ORDERED, THE ENTIRE CABINET WILL HAVE A FINISHED INTERIOR. OPTION TO HAVE ONLY THE TOP OR BOTTOM FINISHED IS NOT AVAILABLE.

WALLS

WALL DOUBLE SECTION 14 1/2" UPPER SECTION

1 3/4" CENTER RAIL
14 1/2" UPPER OPENING WITH NO SHELVES
31 1/4" LOWER OPENING WITH TWO SHELVES

12" DEEP CABINET	LIST PRICE						
	A	*B*	*C*	*D*	*E*	*F*	*G*
WC2451DSL	2112	2139	2277	2277	2337	2376	2628
WC2451DSR	2112	2139	2277	2277	2337	2376	2628
WC2751DSL	2157	2175	2418	2418	2499	2529	2802
WC2751DSR	2157	2175	2418	2418	2499	2529	2802
WC3051DSL	2235	2250	2499	2499	2577	2613	2892
WC3051DSR	2235	2250	2499	2499	2577	2613	2892
WC3351DSL	2310	2328	2577	2577	2658	2697	2991
WC3351DSR	2310	2328	2577	2577	2658	2697	2991
WC3651DSL	2388	2403	2658	2658	2739	2775	3081
WC3651DSR	2388	2403	2658	2658	2739	2775	3081
WC3651DS-4BL	2592	2607	2868	2868	2949	2991	3312
WC3651DS-4BR	2592	2607	2868	2868	2949	2991	3312
WC3951DS-4BL	2667	2685	2949	2949	3027	3075	3408
WC3951DS-4BR	2667	2685	2949	2949	3027	3075	3408
WC4251DS-4BL	2745	2760	3027	3027	3108	3159	3501
WC4251DS-4BR	2745	2760	3027	3027	3108	3159	3501
WC4551DS-4BL	2820	2838	3108	3108	3189	3243	3597
WC4551DS-4BR	2820	2838	3108	3108	3189	3243	3597
WC4851DS-4BL	2898	2913	3189	3189	3267	3324	3690
WC4851DS-4BR	2898	2913	3189	3189	3267	3324	3690

WALL DOUBLE SECTION 14 1/2" UPPER SECTION

1 3/4" CENTER RAIL
14 1/2" UPPER OPENING WITH NO SHELVES
34 1/4" LOWER OPENING WITH TWO SHELVES

12" DEEP CABINET	LIST PRICE						
	A	*B*	*C*	*D*	*E*	*F*	*G*
WC2454DSL	2187	2214	2352	2352	2412	2451	2703
WC2454DSR	2187	2214	2352	2352	2412	2451	2703
WC2754DSL	2232	2250	2493	2493	2574	2604	2877
WC2754DSR	2232	2250	2493	2493	2574	2604	2877
WC3054DSL	2310	2325	2574	2574	2652	2688	2967
WC3054DSR	2310	2325	2574	2574	2652	2688	2967
WC3354DSL	2385	2403	2652	2652	2733	2772	3066
WC3354DSR	2385	2403	2652	2652	2733	2772	3066
WC3654DSL	2463	2478	2733	2733	2814	2850	3156
WC3654DSR	2463	2478	2733	2733	2814	2850	3156
WC3654DS-4BL	2667	2682	2943	2943	3024	3066	3387
WC3654DS-4BR	2667	2682	2943	2943	3024	3066	3387
WC3954DS-4BL	2742	2760	3024	3024	3102	3150	3483
WC3954DS-4BR	2742	2760	3024	3024	3102	3150	3483
WC4254DS-4BL	2820	2835	3102	3102	3183	3234	3576
WC4254DS-4BR	2820	2835	3102	3102	3183	3234	3576
WC4554DS-4BL	2895	2913	3183	3183	3264	3318	3672
WC4554DS-4BR	2895	2913	3183	3183	3264	3318	3672
WC4854DS-4BL	2973	2988	3264	3264	3342	3399	3765
WC4854DS-4BR	2973	2988	3264	3264	3342	3399	3765

A-Bristol, Prairie, Savannah15
B-Plateau, Ridgegate, Summerhill
C-Augusta15, Bedford, Charleston15, Easton, Fairway, Gateway, Harbor, Hastings15, Liberty, Seneca, Vicksburg
D-Regency
E-
F-
G-Aspen15, Centennial15, Madison15, Norfolk15, Orleans, Riverton

SEE PAGE 54 FOR DOORS AVAILABLE IN MOLDED & PRICING

CABINET TYPE

WALL DOUBLE SECTION - BLIND CORNER WALL

CAN PULL 4"

SEE PAGE 360 F0R FINISH ON BLIND OPENING

SINGLE DOOR CABINETS COME AUTOMATICALLY HINGED TO BLIND SIDE
L AND R REPRESENT BLIND PLACEMENT

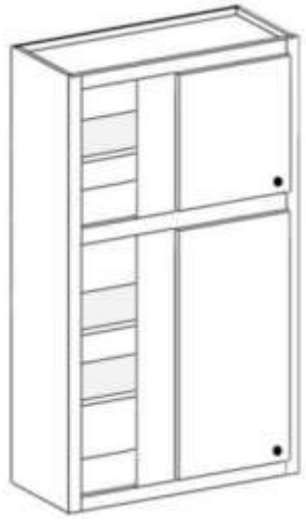

WC2460DSL



WC3660DS-4BL

ANY CHANGES TO STANDARD OPENINGS IS AN ADDITIONAL CHARGE.
IF FINISHED INTERIOR IS ORDERED, THE ENTIRE CABINET WILL HAVE A FINISHED INTERIOR. OPTION TO HAVE ONLY THE TOP OR BOTTOM FINISHED IS NOT AVAILABLE.

WALLS

WALL DOUBLE SECTION 17 1/2" UPPER SECTION

1 3/4" CENTER RAIL
17 1/2" UPPER OPENING WITH NO SHELVES
34 1/4" LOWER OPENING WITH TWO SHELVES

12" DEEP CABINET	LIST PRICE						
	A	*B*	*C*	*D*	*E*	*F*	*G*
WC2457DSL	2337	2364	2502	2502	2562	2601	2853
WC2457DSR	2337	2364	2502	2502	2562	2601	2853
WC2757DSL	2382	2400	2643	2643	2724	2754	3027
WC2757DSR	2382	2400	2643	2643	2724	2754	3027
WC3057DSL	2460	2475	2724	2724	2802	2838	3117
WC3057DSR	2460	2475	2724	2724	2802	2838	3117
WC3357DSL	2535	2553	2802	2802	2883	2922	3216
WC3357DSR	2535	2553	2802	2802	2883	2922	3216
WC3657DSL	2613	2628	2883	2883	2964	3000	3306
WC3657DSR	2613	2628	2883	2883	2964	3000	3306
WC3657DS-4BL	2817	2832	3093	3093	3174	3216	3537
WC3657DS-4BR	2817	2832	3093	3093	3174	3216	3537
WC3957DS-4BL	2892	2910	3174	3174	3252	3300	3633
WC3957DS-4BR	2892	2910	3174	3174	3252	3300	3633
WC4257DS-4BL	2970	2985	3252	3252	3333	3384	3726
WC4257DS-4BR	2970	2985	3252	3252	3333	3384	3726
WC4557DS-4BL	3045	3063	3333	3333	3414	3468	3822
WC4557DS-4BR	3045	3063	3333	3333	3414	3468	3822
WC4857DS-4BL	3123	3138	3414	3414	3492	3549	3915
WC4857DS-4BR	3123	3138	3414	3414	3492	3549	3915

WALL DOUBLE SECTION 20 1/2" UPPER SECTION

1 3/4" CENTER RAIL
20 1/2" UPPER OPENING WITH ONE SHELF
34 1/4" LOWER OPENING WITH TWO SHELVES

12" DEEP CABINET	LIST PRICE						
	A	*B*	*C*	*D*	*E*	*F*	*G*
WC2460DSL	2487	2514	2652	2652	2712	2751	3003
WC2460DSR	2487	2514	2652	2652	2712	2751	3003
WC2760DSL	2532	2550	2793	2793	2874	2904	3177
WC2760DSR	2532	2550	2793	2793	2874	2904	3177
WC3060DSL	2610	2625	2874	2874	2952	2988	3267
WC3060DSR	2610	2625	2874	2874	2952	2988	3267
WC3360DSL	2685	2703	2952	2952	3033	3072	3366
WC3360DSR	2685	2703	2952	2952	3033	3072	3366
WC3660DSL	2763	2778	3033	3033	3114	3150	3456
WC3660DSR	2763	2778	3033	3033	3114	3150	3456
WC3660DS-4BL	2967	2982	3243	3243	3324	3366	3687
WC3660DS-4BR	2967	2982	3243	3243	3324	3366	3687
WC3960DS-4BL	3042	3060	3324	3324	3402	3450	3783
WC3960DS-4BR	3042	3060	3324	3324	3402	3450	3783
WC4260DS-4BL	3120	3135	3402	3402	3483	3534	3876
WC4260DS-4BR	3120	3135	3402	3402	3483	3534	3876
WC4560DS-4BL	3195	3213	3483	3483	3564	3618	3972
WC4560DS-4BR	3195	3213	3483	3483	3564	3618	3972
WC4860DS-4BL	3273	3288	3564	3564	3642	3699	4065
WC4860DS-4BR	3273	3288	3564	3564	3642	3699	4065

A-Bristol, Prairie, Savannah15
B-Plateau, Ridgegate, Summerhill
C-Augusta15, Bedford, Charleston15, Easton, Fairway, Gateway, Harbor, Hastings15, Liberty, Seneca, Vicksburg
D-Regency
E-
F-
G-Aspen15, Centennial15, Madison15, Norfolk15, Orleans, Riverton

SEE PAGE 54 FOR DOORS AVAILABLE IN MOLDED & PRICING

CABINET TYPE — WALLS

WALL DIAGONAL DOUBLE SECTION

NO SHELF IN TOP SECTION
TWO ADJUSTABLE SHELVES IN BOTTOM SECTION OF 42", 48", & 54" TALL
THREE ADJUSTABLE SHELVES IN BOTTOM SECTION OF 57" & 60" TALL

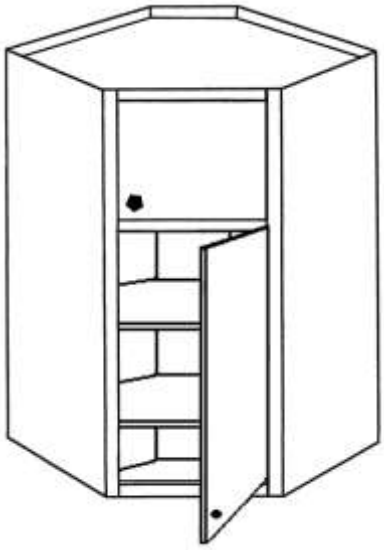

WD2442DSR

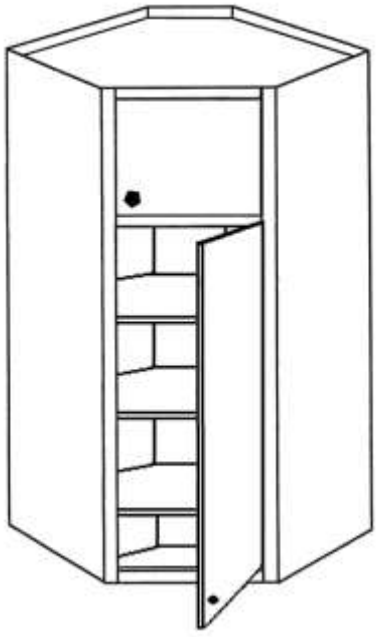

WD2760U15DSR

ANY CHANGES TO STANDARD OPENINGS IS AN ADDITIONAL CHARGE.
IF FINISHED INTERIOR IS ORDERED, THE ENTIRE CABINET WILL HAVE A FINISHED INTERIOR. OPTION TO HAVE ONLY THE TOP OR BOTTOM FINISHED IS NOT AVAILABLE.

1 3/4" CENTER RAIL
42" - TOP OPENING IS 8 1/2" BOTTOM OPENING IS 28 1/4"
48" - TOP OPENING IS 14 1/2" BOTTOM OPENING IS 28 1/4"
51" - TOP OPENING IS 14 1/2" BOTTOM OPENING IS 31 1/4"
54" - TOP OPENING IS 14 1/2" BOTTOM OPENING IS 34 1/4"
57" - TOP OPENING IS 17 1/2" BOTTOM OPENING IS 34 1/4"
60" - TOP OPENING IS 20 1/2" BOTTOM OPENING IS 34 1/4"
INTEGRATED ENDS ARE NOT RECOMMENDED - SEE PAGE 281

12" DEEP CABINET	LIST PRICE						
	A	B	C	D	E	F	G
WD2442DSL	1710	1752	2001	2001	2052	2067	2373
WD2442DSR	1710	1752	2001	2001	2052	2067	2373
WD2448DSL	1938	1989	2271	2271	2331	2322	2652
WD2448DSR	1938	1989	2271	2271	2331	2322	2652
WD2451DSL	2088	2139	2421	2421	2481	2472	2802
WD2451DSR	2088	2139	2421	2421	2481	2472	2802
WD2454DSL	2220	2271	2580	2580	2631	2652	2952
WD2454DSR	2220	2271	2580	2580	2631	2652	2952
WD2457DSL	2373	2424	2805	2805	2916	2946	3237
WD2457DSR	2373	2424	2805	2805	2916	2946	3237
WD2460DSL	2391	2442	2823	2823	2934	2964	3255
WD2460DSR	2391	2442	2823	2823	2934	2964	3255

15" DEEP CABINET	LIST PRICE						
	A	B	C	D	E	F	G
WD2742U15DSL	2001	2043	2301	2301	2352	2403	2673
WD2742U15DSR	2001	2043	2301	2301	2352	2403	2673
WD2748U15DSL	2238	2289	2571	2571	2631	2682	2952
WD2748U15DSR	2238	2289	2571	2571	2631	2682	2952
WD2751U15DSL	2388	2439	2721	2721	2781	2832	3102
WD2751U15DSR	2388	2439	2721	2721	2781	2832	3102
WD2754U15DSL	2520	2571	2880	2880	2931	2982	3252
WD2754U15DSR	2520	2571	2880	2880	2931	2982	3252
WD2757U15DSL	2673	2724	3105	3105	3216	3267	3537
WD2757U15DSR	2673	2724	3105	3105	3216	3267	3537
WD2760U15DSL	2691	2742	3123	3123	3234	3285	3555
WD2760U15DSR	2691	2742	3123	3123	3234	3285	3555

A-Bristol, Prairie, Savannah15
B-Plateau, Ridgegate, Summerhill
C-Augusta15, Bedford, Charleston15, Easton, Fairway, Gateway, Harbor, Hastings15, Liberty, Seneca, Vicksburg
D-Regency
E-
F-
G-Aspen15, Centennial15, Madison15, Norfolk15, Orleans, Riverton

SEE PAGE 54 FOR DOORS AVAILABLE IN MOLDED & PRICING

CABINET TYPE — WALLS

STANDARD REFRIGERATOR WALL W/EXTENDED STILE

12" TALL STANDARD WALL W/EXTENDED STILE

***__ INSERT 84, 90, 93, or 96 TO ORDER LENGTH OF EXTENDED STILE**

ACTUAL OPENING IS OVERALL WIDTH LESS 1 3/4" STILE
3" BOTTOM RAIL
NO SHELF
W42, 45, & 48 WITH 4 DOORS ARE N/A WITH MULLION DOORS
LEG FINISHED ON INSIDE - FOR FINISHED OUTSIDE LEG SEE PAGE 279
L & R INDICATES STILE PLACEMENT

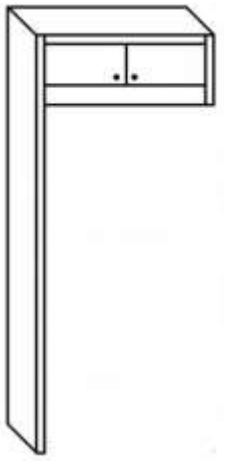

W3012U24ES-2B84L

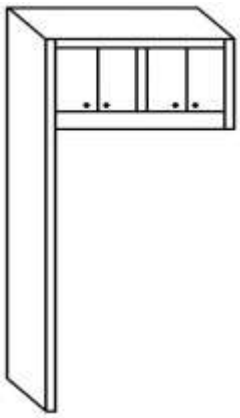

W4812U24ES-4B84L

OVER 96" USE CIT-H CODE

24" DEEP CABINET	LIST PRICE						
	A	*B*	*C*	*D*	*E*	*F*	*G*
W3012U24ES-2B*__L	1851	1887	1965	1965	2010	2058	2097
W3012U24ES-2B*__R	1851	1887	1965	1965	2010	2058	2097
W3312U24ES-2B*__L	1878	1914	2001	2001	2040	2088	2136
W3312U24ES-2B*__R	1878	1914	2001	2001	2040	2088	2136
W3612U24ES-2B*__L	1902	1938	2031	2031	2070	2118	2172
W3612U24ES-2B*__R	1902	1938	2031	2031	2070	2118	2172
W3912U24ES-2B*__L	1923	1959	2061	2061	2106	2154	2208
W3912U24ES-2B*__R	1923	1959	2061	2061	2106	2154	2208
W4212U24ES-2B*__L	1950	1983	2085	2085	2133	2181	2244
W4212U24ES-2B*__R	1950	1983	2085	2085	2133	2181	2244
W4512U24ES-2B*__L	1974	2010	2118	2118	2157	2205	2274
W4512U24ES-2B*__R	1974	2010	2118	2118	2157	2205	2274
W4812U24ES-4B*__L	2322	2355	2463	2463	2505	2553	2628
W4812U24ES-4B*__R	2322	2355	2463	2463	2505	2553	2628

27" DEEP CABINET	LIST PRICE						
	A	*B*	*C*	*D*	*E*	*F*	*G*
W3012U27ES-2B*__L	1902	1938	2016	2016	2061	2109	2148
W3012U27ES-2B*__R	1902	1938	2016	2016	2061	2109	2148
W3312U27ES-2B*__L	1929	1965	2052	2052	2091	2139	2187
W3312U27ES-2B*__R	1929	1965	2052	2052	2091	2139	2187
W3612U27ES-2B*__L	1953	1989	2082	2082	2121	2169	2223
W3612U27ES-2B*__R	1953	1989	2082	2082	2121	2169	2223
W3912U27ES-2B*__L	1974	2010	2112	2112	2157	2205	2259
W3912U27ES-2B*__R	1974	2010	2112	2112	2157	2205	2259
W4212U27ES-2B*__L	2001	2034	2136	2136	2184	2232	2295
W4212U27ES-2B*__R	2001	2034	2136	2136	2184	2232	2295
W4512U27ES-2B*__L	2025	2061	2169	2169	2208	2256	2325
W4512U27ES-2B*__R	2025	2061	2169	2169	2208	2256	2325
W4812U27ES-4B*__L	2373	2406	2514	2514	2556	2604	2679
W4812U27ES-4B*__R	2373	2406	2514	2514	2556	2604	2679

A-Bristol, Prairie, Savannah15
B-Plateau, Ridgegate, Summerhill
C-Augusta15, Bedford, Charleston15, Easton, Fairway, Gateway, Harbor, Hastings15, Liberty, Seneca, Vicksburg
D-Regency
E-
F-
G-Aspen15, Centennial15, Madison15, Norfolk15, Orleans, Riverton

SEE PAGE 54 FOR DOORS AVAILABLE IN MOLDED & PRICING

CABINET TYPE — WALLS

STANDARD REFRIGERATOR WALL W/EXTENDED STILE

14" TALL STANDARD WALL W/EXTENDED STILE

***__ INSERT 84, 90, 93, or 96 TO ORDER LENGTH OF EXTENDED STILE**

ACTUAL OPENING IS OVERALL WIDTH LESS 1 3/4" STILE
3" BOTTOM RAIL
NO SHELF
W42, 45, & 48 WITH 4 DOORS ARE N/A WITH MULLION DOORS
LEG FINISHED ON INSIDE,- FOR FINISHED OUTSIDE LEG SEE PAGE 279
L & R INDICATES STILE PLACEMENT

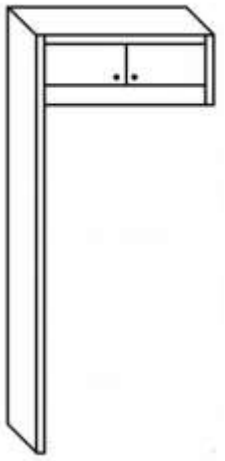

W3014U24ES-2B84L

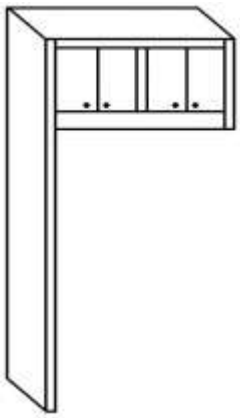

W4814U24ES-4B84L

OVER 96" USE CIT-H CODE

24" DEEP CABINET	LIST PRICE						
	A	*B*	*C*	*D*	*E*	*F*	*G*
W3014U24ES-2B*__L	1905	1941	2019	2019	2064	2112	2151
W3014U24ES-2B*__R	1905	1941	2019	2019	2064	2112	2151
W3314U24ES-2B*__L	1932	1968	2055	2055	2094	2142	2190
W3314U24ES-2B*__R	1932	1968	2055	2055	2094	2142	2190
W3614U24ES-2B*__L	1956	1992	2085	2085	2124	2172	2226
W3614U24ES-2B*__R	1956	1992	2085	2085	2124	2172	2226
W3914U24ES-2B*__L	1977	2013	2115	2115	2160	2208	2262
W3914U24ES-2B*__R	1977	2013	2115	2115	2160	2208	2262
W4214U24ES-2B*__L	2004	2037	2139	2139	2187	2235	2298
W4214U24ES-2B*__R	2004	2037	2139	2139	2187	2235	2298
W4514U24ES-2B*__L	2028	2064	2172	2172	2211	2259	2328
W4514U24ES-2B*__R	2028	2064	2172	2172	2211	2259	2328
W4814U24ES-4B*__L	2376	2409	2517	2517	2559	2607	2682
W4814U24ES-4B*__R	2376	2409	2517	2517	2559	2607	2682

27" DEEP CABINET	LIST PRICE						
	A	*B*	*C*	*D*	*E*	*F*	*G*
W3014U27ES-2B*__L	1956	1992	2070	2070	2115	2163	2202
W3014U27ES-2B*__R	1956	1992	2070	2070	2115	2163	2202
W3314U27ES-2B*__L	1983	2019	2106	2106	2145	2193	2241
W3314U27ES-2B*__R	1983	2019	2106	2106	2145	2193	2241
W3614U27ES-2B*__L	2007	2043	2136	2136	2175	2223	2277
W3614U27ES-2B*__R	2007	2043	2136	2136	2175	2223	2277
W3914U27ES-2B*__L	2028	2064	2166	2166	2211	2259	2313
W3914U27ES-2B*__R	2028	2064	2166	2166	2211	2259	2313
W4214U27ES-2B*__L	2055	2088	2190	2190	2238	2286	2349
W4214U27ES-2B*__R	2055	2088	2190	2190	2238	2286	2349
W4514U27ES-2B*__L	2079	2115	2223	2223	2262	2310	2379
W4514U27ES-2B*__R	2079	2115	2223	2223	2262	2310	2379
W4814U27ES-4B*__L	2427	2460	2568	2568	2610	2658	2733
W4814U27ES-4B*__R	2427	2460	2568	2568	2610	2658	2733

SEE PAGE 54 FOR DOORS AVAILABLE IN MOLDED & PRICING

CABINET TYPE — WALLS

STANDARD REFRIGERATOR WALL W/EXTENDED STILE

15" TALL STANDARD WALL W/EXTENDED STILE

***__ INSERT 84, 90, 93, or 96 TO ORDER LENGTH OF EXTENDED STILE**

ACTUAL OPENING IS OVERALL WIDTH LESS 1 3/4" STILE
3" BOTTOM RAIL
NO SHELF
W42, 45, & 48 WITH 4 DOORS ARE N/A WITH MULLION DOORS
LEG FINISHED ON INSIDE - FOR FINISHED OUTSIDE LEG SEE PAGE 279
L & R INDICATES STILE PLACEMENT

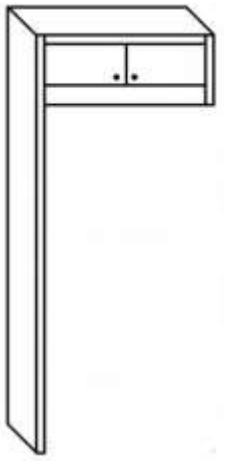

W3015U24ES-2B84L

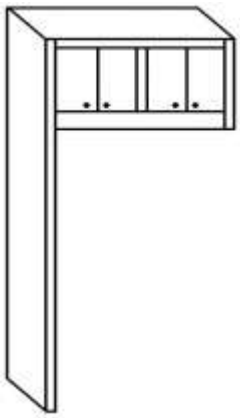

W4815U24ES-4B84L

OVER 96" USE CIT-H CODE

24" DEEP CABINET	LIST PRICE						
	A	*B*	*C*	*D*	*E*	*F*	*G*
W3015U24ES-2B*__L	1959	1995	2073	2073	2118	2166	2205
W3015U24ES-2B*__R	1959	1995	2073	2073	2118	2166	2205
W3315U24ES-2B*__L	1986	2022	2109	2109	2148	2196	2244
W3315U24ES-2B*__R	1986	2022	2109	2109	2148	2196	2244
W3615U24ES-2B*__L	2010	2046	2139	2139	2178	2226	2280
W3615U24ES-2B*__R	2010	2046	2139	2139	2178	2226	2280
W3915U24ES-2B*__L	2031	2067	2169	2169	2214	2262	2316
W3915U24ES-2B*__R	2031	2067	2169	2169	2214	2262	2316
W4215U24ES-2B*__L	2058	2091	2193	2193	2241	2289	2352
W4215U24ES-2B*__R	2058	2091	2193	2193	2241	2289	2352
W4515U24ES-2B*__L	2082	2118	2226	2226	2265	2313	2382
W4515U24ES-2B*__R	2082	2118	2226	2226	2265	2313	2382
W4815U24ES-4B*__L	2430	2463	2571	2571	2613	2661	2736
W4815U24ES-4B*__R	2430	2463	2571	2571	2613	2661	2736

27" DEEP CABINET	LIST PRICE						
	A	*B*	*C*	*D*	*E*	*F*	*G*
W3015U27ES-2B*__L	2010	2046	2124	2124	2169	2217	2256
W3015U27ES-2B*__R	2010	2046	2124	2124	2169	2217	2256
W3315U27ES-2B*__L	2037	2073	2160	2160	2199	2247	2295
W3315U27ES-2B*__R	2037	2073	2160	2160	2199	2247	2295
W3615U27ES-2B*__L	2061	2097	2190	2190	2229	2277	2331
W3615U27ES-2B*__R	2061	2097	2190	2190	2229	2277	2331
W3915U27ES-2B*__L	2082	2118	2220	2220	2265	2313	2367
W3915U27ES-2B*__R	2082	2118	2220	2220	2265	2313	2367
W4215U27ES-2B*__L	2109	2142	2244	2244	2292	2340	2403
W4215U27ES-2B*__R	2109	2142	2244	2244	2292	2340	2403
W4515U27ES-2B*__L	2133	2169	2277	2277	2316	2364	2433
W4515U27ES-2B*__R	2133	2169	2277	2277	2316	2364	2433
W4815U27ES-4B*__L	2481	2514	2622	2622	2664	2712	2787
W4815U27ES-4B*__R	2481	2514	2622	2622	2664	2712	2787

A-Bristol, Prairie, Savannah15
B-Plateau, Ridgegate, Summerhill
C-Augusta15, Bedford, Charleston15, Easton, Fairway, Gateway, Harbor, Hastings15, Liberty, Seneca, Vicksburg
D-Regency
E-
F-
G-Aspen15, Centennial15, Madison15, Norfolk15, Orleans, Riverton

SEE PAGE 54 FOR DOORS AVAILABLE IN MOLDED & PRICING

CABINET TYPE — WALLS

STANDARD REFRIGERATOR WALL W/EXTENDED STILE

18" TALL STANDARD WALL W/EXTENDED STILE

***__ INSERT 84, 90, 93, or 96 TO ORDER LENGTH OF EXTENDED STILE**

ACTUAL OPENING IS OVERALL WIDTH LESS 1 3/4" STILE
3" BOTTOM RAIL
NO SHELF
W42, 45, & 48 WITH 4 DOORS ARE N/A WITH MULLION DOORS
LEG FINISHED ON INSIDE - FOR FINISHED OUTSIDE LEG SEE PAGE 279
L & R INDICATES STILE PLACEMENT

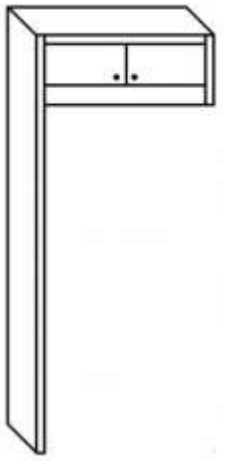

W3018U24ES-2B84L

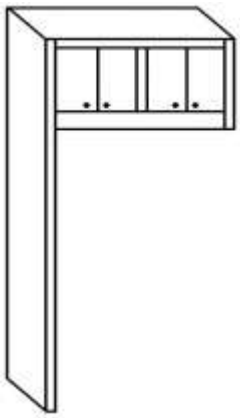

W4818U24ES-4B84L

OVER 96" USE CIT-H CODE

24" DEEP CABINET	LIST PRICE						
	A	*B*	*C*	*D*	*E*	*F*	*G*
W3018U24ES-2B*__L	1992	2028	2106	2106	2151	2199	2238
W3018U24ES-2B*__R	1992	2028	2106	2106	2151	2199	2238
W3318U24ES-2B*__L	2019	2055	2142	2142	2181	2229	2277
W3318U24ES-2B*__R	2019	2055	2142	2142	2181	2229	2277
W3618U24ES-2B*__L	2043	2079	2172	2172	2211	2259	2313
W3618U24ES-2B*__R	2043	2079	2172	2172	2211	2259	2313
W3918U24ES-2B*__L	2064	2100	2202	2202	2247	2295	2349
W3918U24ES-2B*__R	2064	2100	2202	2202	2247	2295	2349
W4218U24ES-2B*__L	2091	2124	2226	2226	2274	2322	2385
W4218U24ES-2B*__R	2091	2124	2226	2226	2274	2322	2385
W4518U24ES-2B*__L	2115	2151	2259	2259	2298	2346	2415
W4518U24ES-2B*__R	2115	2151	2259	2259	2298	2346	2415
W4818U24ES-4B*__L	2463	2496	2604	2604	2646	2694	2769
W4818U24ES-4B*__R	2463	2496	2604	2604	2646	2694	2769

27" DEEP CABINET	LIST PRICE						
	A	*B*	*C*	*D*	*E*	*F*	*G*
W3018U27ES-2B*__L	2043	2079	2157	2157	2202	2250	2289
W3018U27ES-2B*__R	2043	2079	2157	2157	2202	2250	2289
W3318U27ES-2B*__L	2070	2106	2193	2193	2232	2280	2328
W3318U27ES-2B*__R	2070	2106	2193	2193	2232	2280	2328
W3618U27ES-2B*__L	2094	2130	2223	2223	2262	2310	2364
W3618U27ES-2B*__R	2094	2130	2223	2223	2262	2310	2364
W3918U27ES-2B*__L	2115	2151	2253	2253	2298	2346	2400
W3918U27ES-2B*__R	2115	2151	2253	2253	2298	2346	2400
W4218U27ES-2B*__L	2142	2175	2277	2277	2325	2373	2436
W4218U27ES-2B*__R	2142	2175	2277	2277	2325	2373	2436
W4518U27ES-2B*__L	2166	2202	2310	2310	2349	2397	2466
W4518U27ES-2B*__R	2166	2202	2310	2310	2349	2397	2466
W4818U27ES-4B*__L	2514	2547	2655	2655	2697	2745	2820
W4818U27ES-4B*__R	2514	2547	2655	2655	2697	2745	2820

SEE PAGE 54 FOR DOORS AVAILABLE IN MOLDED & PRICING

CABINET TYPE — WALLS

STANDARD REFRIGERATOR WALL W/EXTENDED STILE

21" TALL STANDARD WALL W/EXTENDED STILE

***__ INSERT 84, 90, 93, or 96 TO ORDER LENGTH OF EXTENDED STILE**

ACTUAL OPENING IS OVERALL WIDTH LESS 1 3/4" STILE
3" BOTTOM RAIL
NO SHELF
W42, 45, & 48 WITH 4 DOORS ARE N/A WITH MULLION DOORS
LEG FINISHED ON INSIDE - FOR FINISHED OUTSIDE LEG SEE PAGE 279
L & R INDICATES STILE PLACEMENT

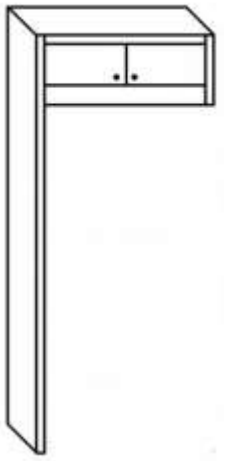

W3021U24ES-2B84L

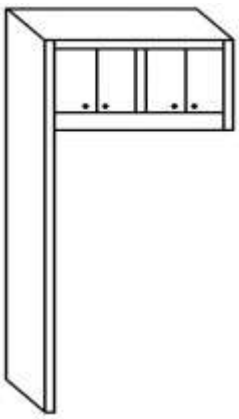

W4821U24ES-4B84L

OVER 96" USE CIT-H CODE

24" DEEP CABINET	LIST PRICE						
	A	*B*	*C*	*D*	*E*	*F*	*G*
W3021U24ES-2B*__L	2037	2073	2151	2151	2196	2244	2283
W3021U24ES-2B*__R	2037	2073	2151	2151	2196	2244	2283
W3321U24ES-2B*__L	2064	2100	2187	2187	2226	2274	2322
W3321U24ES-2B*__R	2064	2100	2187	2187	2226	2274	2322
W3621U24ES-2B*__L	2088	2124	2217	2217	2256	2304	2358
W3621U24ES-2B*__R	2088	2124	2217	2217	2256	2304	2358
W3921U24ES-2B*__L	2109	2145	2247	2247	2292	2340	2394
W3921U24ES-2B*__R	2109	2145	2247	2247	2292	2340	2394
W4221U24ES-2B*__L	2136	2169	2271	2271	2319	2367	2430
W4221U24ES-2B*__R	2136	2169	2271	2271	2319	2367	2430
W4521U24ES-2B*__L	2160	2196	2304	2304	2343	2391	2460
W4521U24ES-2B*__R	2160	2196	2304	2304	2343	2391	2460
W4821U24ES-4B*__L	2508	2541	2649	2649	2691	2739	2814
W4821U24ES-4B*__R	2508	2541	2649	2649	2691	2739	2814

27" DEEP CABINET	LIST PRICE						
	A	*B*	*C*	*D*	*E*	*F*	*G*
W3021U27ES-2B*__L	2088	2124	2202	2202	2247	2295	2334
W3021U27ES-2B*__R	2088	2124	2202	2202	2247	2295	2334
W3321U27ES-2B*__L	2115	2151	2238	2238	2277	2325	2373
W3321U27ES-2B*__R	2115	2151	2238	2238	2277	2325	2373
W3621U27ES-2B*__L	2139	2175	2268	2268	2307	2355	2409
W3621U27ES-2B*__R	2139	2175	2268	2268	2307	2355	2409
W3921U27ES-2B*__L	2160	2196	2298	2298	2343	2391	2445
W3921U27ES-2B*__R	2160	2196	2298	2298	2343	2391	2445
W4221U27ES-2B*__L	2187	2220	2322	2322	2370	2418	2481
W4221U27ES-2B*__R	2187	2220	2322	2322	2370	2418	2481
W4521U27ES-2B*__L	2211	2247	2355	2355	2394	2442	2511
W4521U27ES-2B*__R	2211	2247	2355	2355	2394	2442	2511
W4821U27ES-4B*__L	2559	2592	2700	2700	2742	2790	2865
W4821U27ES-4B*__R	2559	2592	2700	2700	2742	2790	2865

SEE PAGE 54 FOR DOORS AVAILABLE IN MOLDED & PRICING

CABINET TYPE — WALLS

STANDARD REFRIGERATOR WALL W/EXTENDED STILE

24" TALL STANDARD WALL W/EXTENDED STILE

***__ INSERT 84, 90, 93, or 96 TO ORDER LENGTH OF EXTENDED STILE**

ACTUAL OPENING IS OVERALL WIDTH LESS 1 3/4" STILE
3" BOTTOM RAIL
ONE SHELF
W42, 45, & 48 WITH 4 DOORS ARE N/A WITH MULLION DOORS
LEG FINISHED ON INSIDE - FOR FINISHED OUTSIDE LEG SEE PAGE 279
L & R INDICATES STILE PLACEMENT

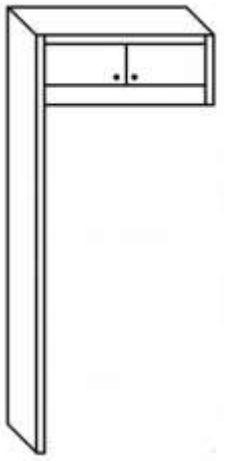

W3024U24ES-2B84L

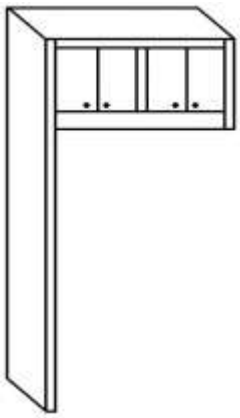

W4824U24ES-4B84L

OVER 96" USE CIT-H CODE

24" DEEP CABINET	LIST PRICE						
	A	*B*	*C*	*D*	*E*	*F*	*G*
W3024U24ES-2B*__L	2052	2088	2166	2166	2211	2259	2298
W3024U24ES-2B*__R	2052	2088	2166	2166	2211	2259	2298
W3324U24ES-2B*__L	2079	2115	2202	2202	2241	2289	2337
W3324U24ES-2B*__R	2079	2115	2202	2202	2241	2289	2337
W3624U24ES-2B*__L	2103	2139	2232	2232	2271	2319	2373
W3624U24ES-2B*__R	2103	2139	2232	2232	2271	2319	2373
W3924U24ES-2B*__L	2124	2160	2262	2262	2307	2355	2409
W3924U24ES-2B*__R	2124	2160	2262	2262	2307	2355	2409
W4224U24ES-2B*__L	2151	2184	2286	2286	2334	2382	2445
W4224U24ES-2B*__R	2151	2184	2286	2286	2334	2382	2445
W4524U24ES-2B*__L	2175	2211	2319	2319	2358	2406	2475
W4524U24ES-2B*__R	2175	2211	2319	2319	2358	2406	2475
W4824U24ES-4B*__L	2523	2556	2664	2664	2706	2754	2829
W4824U24ES-4B*__R	2523	2556	2664	2664	2706	2754	2829

27" DEEP CABINET	LIST PRICE						
	A	*B*	*C*	*D*	*E*	*F*	*G*
W3024U27ES-2B*__L	2103	2139	2217	2217	2262	2310	2349
W3024U27ES-2B*__R	2103	2139	2217	2217	2262	2310	2349
W3324U27ES-2B*__L	2130	2166	2253	2253	2292	2340	2388
W3324U27ES-2B*__R	2130	2166	2253	2253	2292	2340	2388
W3624U27ES-2B*__L	2154	2190	2283	2283	2322	2370	2424
W3624U27ES-2B*__R	2154	2190	2283	2283	2322	2370	2424
W3924U27ES-2B*__L	2175	2211	2313	2313	2358	2406	2460
W3924U27ES-2B*__R	2175	2211	2313	2313	2358	2406	2460
W4224U27ES-2B*__L	2202	2235	2337	2337	2385	2433	2496
W4224U27ES-2B*__R	2202	2235	2337	2337	2385	2433	2496
W4524U27ES-2B*__L	2226	2262	2370	2370	2409	2457	2526
W4524U27ES-2B*__R	2226	2262	2370	2370	2409	2457	2526
W4824U27ES-4B*__L	2574	2607	2715	2715	2757	2805	2880
W4824U27ES-4B*__R	2574	2607	2715	2715	2757	2805	2880

A-Bristol, Prairie, Savannah15
B-Plateau, Ridgegate, Summerhill
C-Augusta15, Bedford, Charleston15, Easton, Fairway, Gateway, Harbor, Hastings15, Liberty, Seneca, Vicksburg
D-Regency
E-
F-
G-Aspen15, Centennial15, Madison15, Norfolk15, Orleans, Riverton

SEE PAGE 54 FOR DOORS AVAILABLE IN MOLDED & PRICING

CABINET TYPE — WALLS

STANDARD REFRIGERATOR WALL W/EXTENDED STILES

***__ INSERT 84, 90, 93, or 96 TO ORDER LENGTH OF EXTENDED STILE**

ACTUAL OPENING IS OVERALL WIDTH LESS 3 1/2" (2- 1 3/4" STILES)
3" BOTTOM RAIL
NO SHELF
W42, 45, & 48 WITH 4 DOORS ARE N/A WITH MULLION DOORS
LEG FINISHED ON INSIDE - FOR FINISHED OUTSIDE LEG SEE PAGE 279

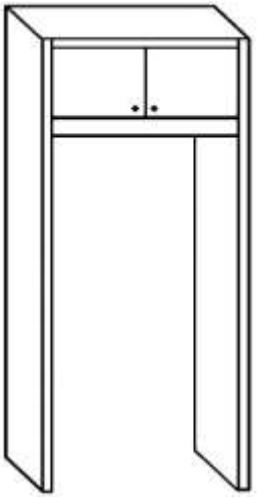

W3012U24ES-2B84B

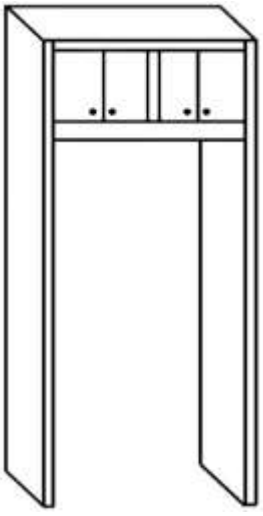

W4812U24ES-4B84B

OVER 96" USE CIT-H CODE

12" TALL STANDARD WALL WITH TWO EXTENDED STILES

24" DEEP CABINET	LIST PRICE						
	A	*B*	*C*	*D*	*E*	*F*	*G*
W3012U24ES-2B*__B	2646	2691	2790	2790	2850	2892	2964
W3312U24ES-2B*__B	2679	2724	2838	2838	2892	2934	3018
W3612U24ES-2B*__B	2712	2757	2877	2877	2931	2973	3063
W3912U24ES-2B*__B	2739	2784	2904	2916	2958	3000	3090
W40512U24ES2B*__B	2766	2811	2931	2931	2985	3027	3117
W4212U24ES-2B*__B	2793	2838	2958	2958	3012	3054	3144
W4512U24ES-2B*__B	2820	2865	2985	2985	3039	3081	3171
W4812U24ES-4B*__B	3195	3243	3423	3423	3489	3531	3552

27" DEEP CABINET	LIST PRICE						
	A	*B*	*C*	*D*	*E*	*F*	*G*
W3012U27ES-2B*__B	2697	2742	2841	2841	2901	2943	3015
W3312U27ES-2B*__B	2730	2775	2889	2889	2943	2985	3069
W3612U27ES-2B*__B	2763	2808	2928	2928	2982	3024	3114
W3912U27ES-2B*__B	2790	2835	2955	2967	3009	3051	3141
W40512U27ES2B*__B	2817	2862	2982	2982	3036	3078	3168
W4212U27ES-2B*__B	2844	2889	3009	3009	3063	3105	3195
W4512U27ES-2B*__B	2871	2916	3036	3036	3090	3132	3222
W4812U27ES-4B*__B	3246	3294	3474	3474	3540	3582	3603

14" TALL STANDARD WALL WITH TWO EXTENDED STILES

24" DEEP CABINET	LIST PRICE						
	A	*B*	*C*	*D*	*E*	*F*	*G*
W3014U24ES-2B*__B	2700	2745	2844	2844	2904	2946	3018
W3314U24ES-2B*__B	2733	2778	2892	2892	2946	2988	3072
W3614U24ES-2B*__B	2766	2811	2931	2931	2985	3027	3117
W3914U24ES-2B*__B	2793	2838	2958	2970	3012	3054	3144
W40514U24ES2B*__B	2820	2865	2985	2985	3039	3081	3171
W4214U24ES-2B*__B	2847	2892	3012	3012	3066	3108	3198
W4514U24ES-2B*__B	2874	2919	3039	3039	3093	3135	3225
W4814U24ES-4B*__B	3249	3297	3477	3477	3543	3585	3606

27" DEEP CABINET	LIST PRICE						
	A	*B*	*C*	*D*	*E*	*F*	*G*
W3014U27ES-2B*__B	2751	2796	2895	2895	2955	2997	3069
W3314U27ES-2B*__B	2784	2829	2943	2943	2997	3039	3123
W3614U27ES-2B*__B	2817	2862	2982	2982	3036	3078	3168
W3914U27ES-2B*__B	2844	2889	3009	3021	3063	3105	3195
W40514U27ES2B*__B	2871	2916	3036	3036	3090	3132	3222
W4214U27ES-2B*__B	2898	2943	3063	3063	3117	3159	3249
W4514U27ES-2B*__B	2925	2970	3090	3090	3144	3186	3276
W4814U27ES-4B*__B	3300	3348	3528	3528	3594	3636	3657

A-Bristol, Prairie, Savannah15
B-Plateau, Ridgegate, Summerhill
C-Augusta15, Bedford, Charleston15, Easton, Fairway, Gateway, Harbor, Hastings15, Liberty, Seneca, Vicksburg
D-Regency
E-
F-
G-Aspen15, Centennial15, Madison15, Norfolk15, Orleans, Riverton

SEE PAGE 54 FOR DOORS AVAILABLE IN MOLDED & PRICING

CABINET TYPE — WALLS

STANDARD REFRIGERATOR WALL W/EXTENDED STILES

***__ INSERT 84, 90, 93, or 96 TO ORDER LENGTH OF EXTENDED STILE**

ACTUAL OPENING IS OVERALL WIDTH LESS 3 1/2" (2- 1 3/4" STILES)
3" BOTTOM RAIL
NO SHELF
W42, 45, & 48 WITH 4 DOORS ARE N/A WITH MULLION DOORS
LEG FINISHED ON INSIDE - FOR FINISHED OUTSIDE LEG SEE PAGE 279

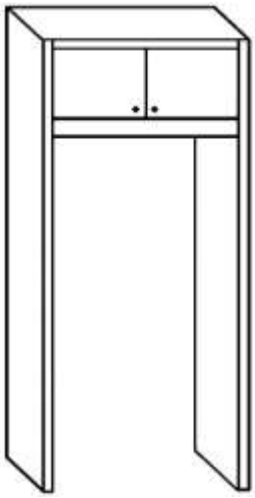

W3015U24ES-2B84B

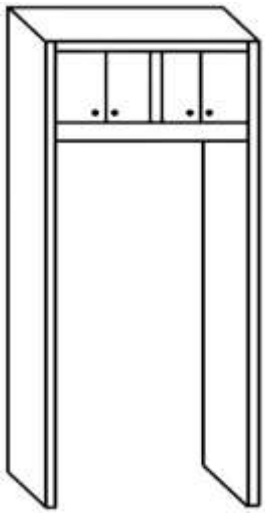

W4815U24ES-4B84B

OVER 96" USE CIT-H CODE

15" TALL STANDARD WALL WITH TWO EXTENDED STILES

24" DEEP CABINET	LIST PRICE						
	A	*B*	*C*	*D*	*E*	*F*	*G*
W3015U24ES-2B*__B	2754	2799	2898	2898	2958	3000	3072
W3315U24ES-2B*__B	2787	2832	2946	2946	3000	3042	3126
W3615U24ES-2B*__B	2820	2865	2985	2985	3039	3081	3171
W3915U24ES-2B*__B	2847	2892	3012	3024	3066	3108	3198
W40515U24ES2B*__B	2874	2919	3039	3039	3093	3135	3225
W4215U24ES-2B*__B	2901	2946	3066	3066	3120	3162	3252
W4515U24ES-2B*__B	2928	2973	3093	3093	3147	3189	3279
W4815U24ES-4B*__B	3303	3351	3531	3531	3597	3639	3660

27" DEEP CABINET	LIST PRICE						
	A	*B*	*C*	*D*	*E*	*F*	*G*
W3015U27ES-2B*__B	2805	2850	2949	2949	3009	3051	3123
W3315U27ES-2B*__B	2838	2883	2997	2997	3051	3093	3177
W3615U27ES-2B*__B	2871	2916	3036	3036	3090	3132	3222
W3915U27ES-2B*__B	2898	2943	3063	3075	3117	3159	3249
W40515U27ES2B*__B	2925	2970	3090	3090	3144	3186	3276
W4215U27ES-2B*__B	2952	2997	3117	3117	3171	3213	3303
W4515U27ES-2B*__B	2979	3024	3144	3144	3198	3240	3330
W4815U27ES-4B*__B	3354	3402	3582	3582	3648	3690	3711

18" TALL STANDARD WALL WITH TWO EXTENDED STILES

24" DEEP CABINET	LIST PRICE						
	A	*B*	*C*	*D*	*E*	*F*	*G*
W3018U24ES-2B*__B	2808	2853	2952	2952	3012	3054	3126
W3318U24ES-2B*__B	2841	2886	3000	3000	3054	3096	3180
W3618U24ES-2B*__B	2874	2919	3039	3039	3093	3135	3225
W3918U24ES-2B*__B	2901	2946	3066	3078	3120	3162	3252
W40518U24ES2B*__B	2928	2973	3093	3093	3147	3189	3279
W4218U24ES-2B*__B	2955	3000	3120	3120	3174	3216	3306
W4518U24ES-2B*__B	2982	3027	3147	3147	3201	3243	3333
W4818U24ES-4B*__B	3357	3405	3585	3585	3651	3693	3714

27" DEEP CABINET	LIST PRICE						
	A	*B*	*C*	*D*	*E*	*F*	*G*
W3018U27ES-2B*__B	2859	2904	3003	3003	3063	3105	3177
W3318U27ES-2B*__B	2892	2937	3051	3051	3105	3147	3231
W3618U27ES-2B*__B	2925	2970	3090	3090	3144	3186	3276
W3918U27ES-2B*__B	2952	2997	3117	3129	3171	3213	3303
W40518U27ES2B*__B	2979	3024	3144	3144	3198	3240	3330
W4218U27ES-2B*__B	3006	3051	3171	3171	3225	3267	3357
W4518U27ES-2B*__B	3033	3078	3198	3198	3252	3294	3384
W4818U27ES-4B*__B	3408	3456	3636	3636	3702	3744	3765

A-Bristol, Prairie, Savannah15
B-Plateau, Ridgegate, Summerhill
C-Augusta15, Bedford, Charleston15, Easton, Fairway, Gateway, Harbor, Hastings15, Liberty, Seneca, Vicksburg
D-Regency
E-
F-
G-Aspen15, Centennial15, Madison15, Norfolk15, Orleans, Riverton

SEE PAGE 54 FOR DOORS AVAILABLE IN MOLDED & PRICING

CABINET TYPE — WALLS

STANDARD REFRIGERATOR WALL W/EXTENDED STILES

***__ INSERT 84, 90, 93, or 96 TO ORDER LENGTH OF EXTENDED STILE**

ACTUAL OPENING IS OVERALL WIDTH LESS 3 1/2" (2- 1 3/4" STILES)
3" BOTTOM RAIL
21" TALL NO SHELF - 24" TALL ONE SHELF
W42, 45, & 48 WITH 4 DOORS ARE N/A WITH MULLION DOORS
LEG FINISHED ON INSIDE - FOR FINISHED OUTSIDE LEG SEE PAGE 279

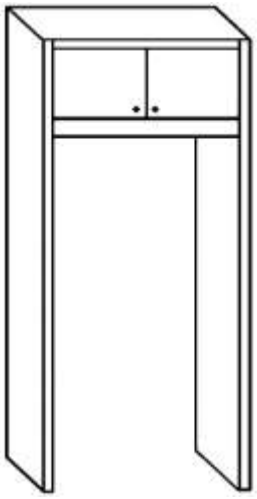

W3021U24ES-2B84B

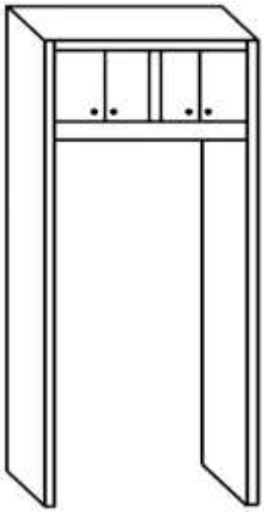

W4821U24ES-4B84B

OVER 96" USE CIT-H CODE

21" TALL STANDARD WALL WITH TWO EXTENDED STILES

24" DEEP CABINET	LIST PRICE						
	A	*B*	*C*	*D*	*E*	*F*	*G*
W3021U24ES-2B*__B	2838	2883	2982	2982	3042	3084	3156
W3321U24ES-2B*__B	2871	2916	3030	3030	3084	3126	3210
W3621U24ES-2B*__B	2904	2949	3069	3069	3123	3165	3255
W3921U24ES-2B*__B	2931	2976	3096	3108	3150	3192	3282
W40521U24ES2B*__B	2958	3003	3123	3123	3177	3219	3309
W4221U24ES-2B*__B	2985	3030	3150	3150	3204	3246	3336
W4521U24ES-2B*__B	3012	3057	3177	3177	3231	3273	3363
W4821U24ES-4B*__B	3387	3435	3615	3615	3681	3723	3744

27" DEEP CABINET	LIST PRICE						
	A	*B*	*C*	*D*	*E*	*F*	*G*
W3021U27ES-2B*__B	2889	2934	3033	3033	3093	3135	3207
W3321U27ES-2B*__B	2922	2967	3081	3081	3135	3177	3261
W3621U27ES-2B*__B	2955	3000	3120	3120	3174	3216	3306
W3921U27ES-2B*__B	2982	3027	3147	3159	3201	3243	3333
W40521U27ES2B*__B	3009	3054	3174	3174	3228	3270	3360
W4221U27ES-2B*__B	3036	3081	3201	3201	3255	3297	3387
W4521U27ES-2B*__B	3063	3108	3228	3228	3282	3324	3414
W4821U27ES-4B*__B	3438	3486	3666	3666	3732	3774	3795

24" TALL STANDARD WALL WITH TWO EXTENDED STILES

24" DEEP CABINET	LIST PRICE						
	A	*B*	*C*	*D*	*E*	*F*	*G*
W3024U24ES-2B*__B	2856	2901	3000	3000	3060	3102	3174
W3324U24ES-2B*__B	2889	2934	3048	3048	3102	3144	3228
W3624U24ES-2B*__B	2922	2967	3087	3087	3141	3183	3273
W3924U24ES-2B*__B	2949	2994	3114	3126	3168	3210	3300
W40524U24ES2B*__B	2976	3021	3141	3141	3195	3237	3327
W4224U24ES-2B*__B	3003	3048	3168	3168	3222	3264	3354
W4524U24ES-2B*__B	3030	3075	3195	3195	3249	3291	3381
W4824U24ES-4B*__B	3405	3453	3633	3633	3699	3741	3762

27" DEEP CABINET	LIST PRICE						
	A	*B*	*C*	*D*	*E*	*F*	*G*
W3024U27ES-2B*__B	2907	2952	3051	3051	3111	3153	3225
W3324U27ES-2B*__B	2940	2985	3099	3099	3153	3195	3279
W3624U27ES-2B*__B	2973	3018	3138	3138	3192	3234	3324
W3924U27ES-2B*__B	3000	3045	3165	3177	3219	3261	3351
W40524U27ES2B*__B	3027	3072	3192	3192	3246	3288	3378
W4224U27ES-2B*__B	3054	3099	3219	3219	3273	3315	3405
W4524U27ES-2B*__B	3081	3126	3246	3246	3300	3342	3432
W4824U27ES-4B*__B	3456	3504	3684	3684	3750	3792	3813

NOTES OR ADDITIONS

NOTES OR ADDITIONS

NOTES OR ADDITIONS

Hood Installation

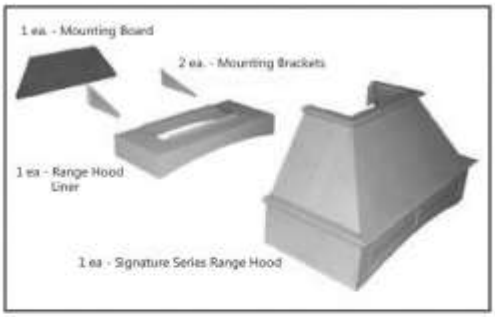

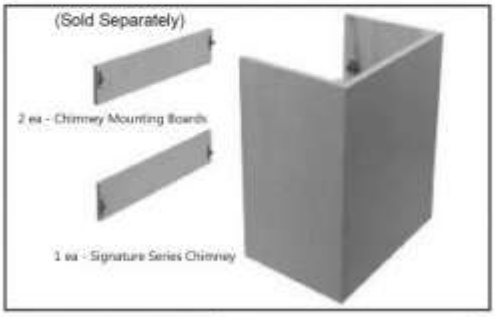

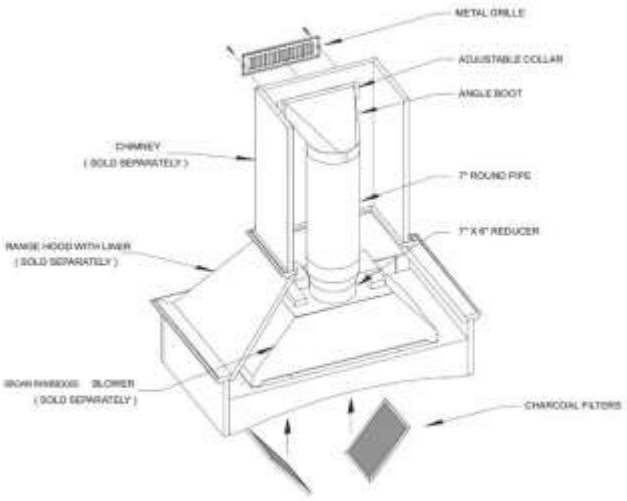

EASY TO INSTALL

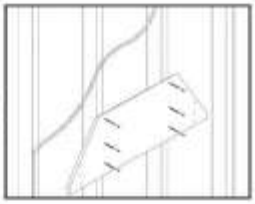

Step 1:
Screw mounting plate to wall

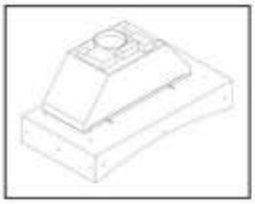

Step 2:
Assemble blower unit (sold separately) to metal liner

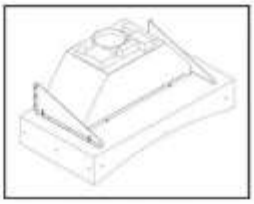

Step 3:
Fasten metal mounting brackets to liner

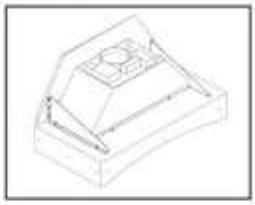

Step 4:
Hang the liner/bracket assembly on the mounting plate (make all electrical and ventilation connections at this point)



Step 5:
Slip the wood range hood on top of the mounting plate

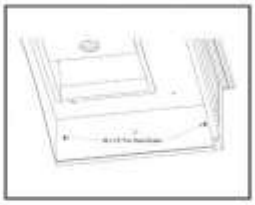

Step 6:
Fasten wood range hood to liner with (4) screws

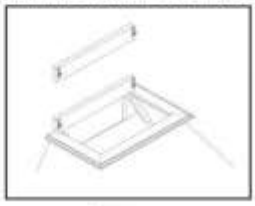

Step 7:
If using a chimney (sold separately) mount blocks to wall



Step 8:
Snap chimney in place

Made in AMERICA

Omega National

Omega National

RANGE HOODS - NO CUSTOM SIZES AVAILABLE

SIGNATURE CRAFTSMAN WITH STRAIGHT PANEL FRONT
LINERS INCLUDED

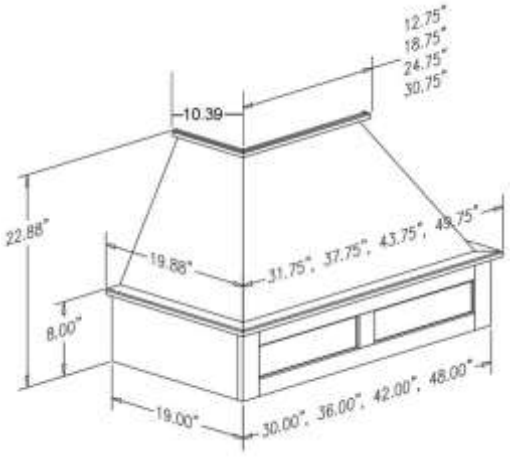

TRIMMABLE CHIMNEY
SOLD SEPARATELY





Available at 30", 36", 42" and 48" Wide		
OMEGA-SCR2030SP	6240	EA
OMEGA-SCR2036SP	6570	EA
OMEGA-SCR2042SP	6810	EA
OMEGA-SCR2048SP	7035	EA

Available in Beech, Birch, Cherry, Hickory, Maple, Alder and Rift White Oak. N/A in Rustic White Oak or White Oak. Clear Species will be used for wall hoods when ordering rustic species for cabinets. Maple will be substituted for Paint Grade - Maple. LINERS INCLUDED.

SIGNATURE CRAFTSMAN WITH ARCHED PANEL FRONT
LINERS INCLUDED

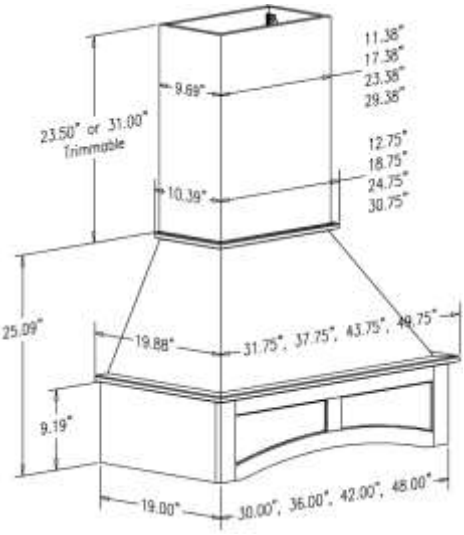

TRIMMABLE CHIMNEY
SOLD SEPARATELY





Available at 30", 36", 42" and 48" Wide		
OMEGA-SCR2830AP	6240	EA
OMEGA-SCR2836AP	6570	EA
OMEGA-SCR2842AP	6810	EA
OMEGA-SCR2848AP	7035	EA

Available in Birch, Beech, Cherry, Hickory, Maple, Alder and Rift White Oak. N/A in Rustic White Oak or White Oak. Clear Species will be used for wall hoods when ordering rustic species for cabinets. Maple will be substituted for Paint Grade - Maple. LINERS INCLUDED.

Omega National

RANGE HOODS - NO CUSTOM SIZES AVAILABLE

MODERN RANGE HOOD STRAIGHT
LINERS INCLUDED

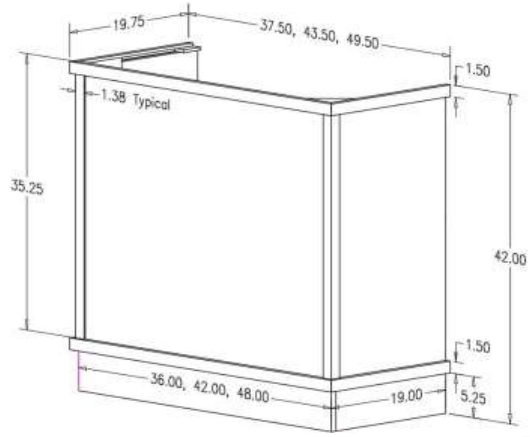

MAX HEIGHT AVAILABLE IS 42".
CAN BE TRIMMED TO DESIRED HEIGHT.



Available at 36", 42" and 48" Wide		
OMEGA-R29SS036	7350	EA
OMEGA-R29SS042	7980	EA
OMEGA-R29SS048	8175	EA

Available in Cherry, Maple, Alder, Hickory and Rift White Oak. N/A in Beech, Birch, Rustic White Oak or White Oak. Clear Species will be used for wall hoods when ordering rustic species for cabinets. Maple will be substituted for Paint Grade - Maple. LINERS INCLUDED.

MODERN FARMHOUSE SHIPLAP STRAIGHT
LINERS INCLUDED

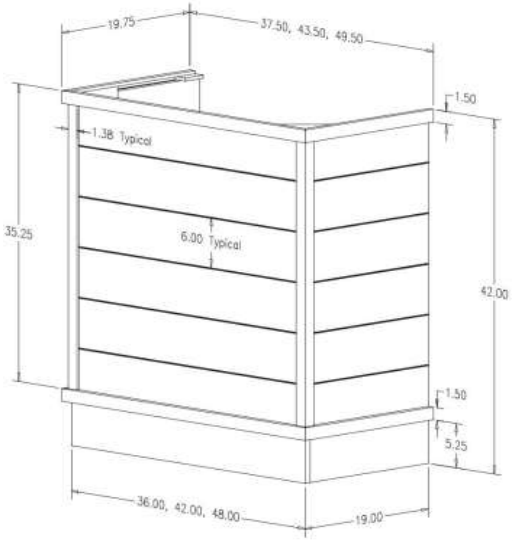

MAX HEIGHT AVAILABLE IS 42".
CAN BE TRIMMED TO DESIRED HEIGHT.



Available at 36", 42" and 48" Wide		
OMEGA-R19SS036	7650	EA
OMEGA-R19SS042	8280	EA
OMEGA-R19SS048	8475	EA

Available in Cherry, Maple, Alder, Hickory and Rift White Oak. N/A in Beech, Birch, Rustic White Oak or White Oak. Clear Species will be used for wall hoods when ordering rustic species for cabinets. Maple will be substituted for Paint Grade - Maple. LINERS INCLUDED.

Omega National

RANGE HOODS - NO CUSTOM SIZES AVAILABLE

SIGNATURE STRAIGHT RANGE HOOD
LINERS INCLUDED

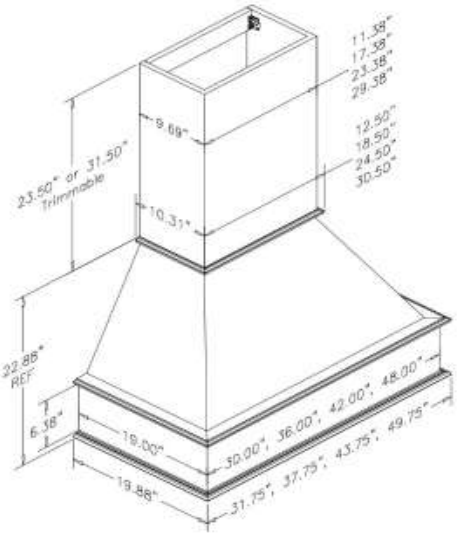

TRIMMABLE CHIMNEY SOLD SEPARATELY





Available at 30", 36" 42" and 48" Wide		
OMEGA-SR2130SP	6225	EA
OMEGA-SR2136SP	6489	EA
OMEGA-SR2142SP	6705	EA
OMEGA-SR2148SP	7080	EA

Available in Cherry, Birch, Beech, Hickory, Maple, Alder and Rift White Oak. N/A in Rustic White Oak or White Oak. Clear Species will be used for wall hoods when ordering rustic species for cabinets. Maple will be substituted for Paint Grade - Maple. LINERS INCLUDED.

SIGNATURE ARCHED RAISED PANEL RANGE HOOD
LINERS INCLUDED

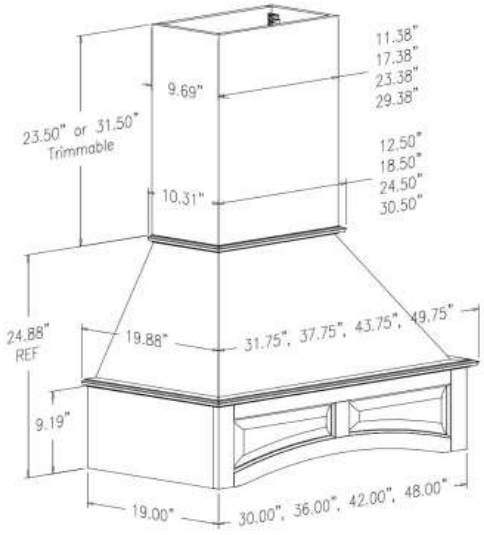

TRIMMABLE CHIMNEY SOLD SEPARATELY





RAISED PANEL PORTION OF HOOD WILL NOT MATCH PERFECTLY TO OUR STILES, RAILS AND PANELS.

Available at 30", 36" 42" and 48" Wide		
OMEGA-SR2630AP	6657	EA
OMEGA-SR2636AP	6852	EA
OMEGA-SR2642AP	7182	EA
OMEGA-SR2648AP	7293	EA

Available in Cherry, Birch, Beech, Hickory, Maple, Alder and Rift White Oak. N/A in Rustic White Oak or White Oak. Clear Species will be used for wall hoods when ordering rustic species for cabinets. Maple will be substituted for Paint Grade - Maple. LINERS INCLUDED.

Omega National

RANGE HOODS - NO CUSTOM SIZES AVAILABLE

VERONA RANGE HOOD
LINERS INCLUDED

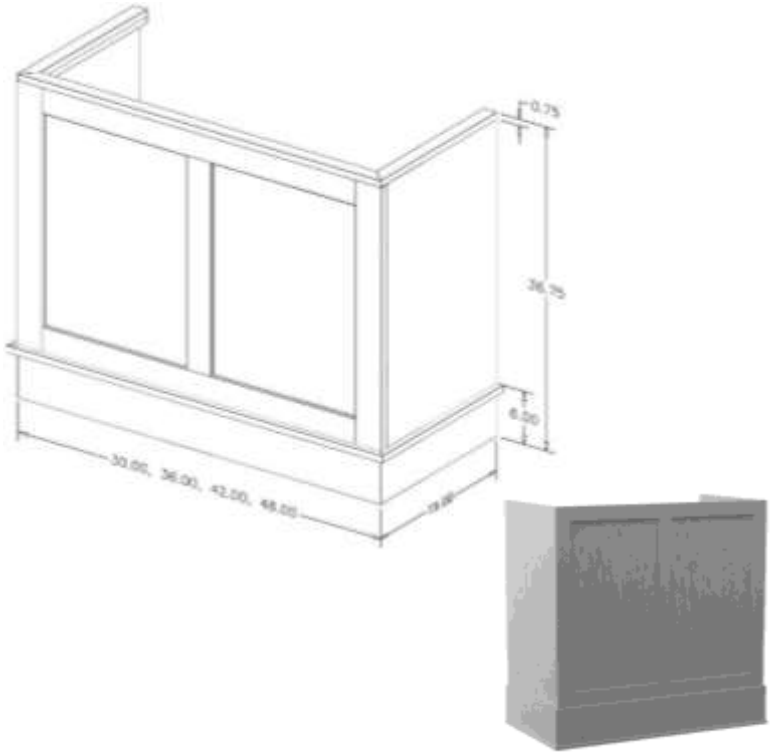

Available at 30", 36", 42" and 48" Wide		
OMEGA-R70301S30	7800	EA
OMEGA-R70301S36	8250	EA
OMEGA-R70301S42	9525	EA
OMEGA-R70301S48	9600	EA

Available in Cherry, Maple, Alder and Rift White Oak. N/A in Beech, Birch, Hickory, Rustic White Oak or White Oak. Clear Species will be used for wall hoods when ordering rustic species for cabinets. Maple will be substituted for Paint Grade - Maple. LINERS INCLUDED.

VERONA TAMBOUR RANGE HOOD
LINERS INCLUDED

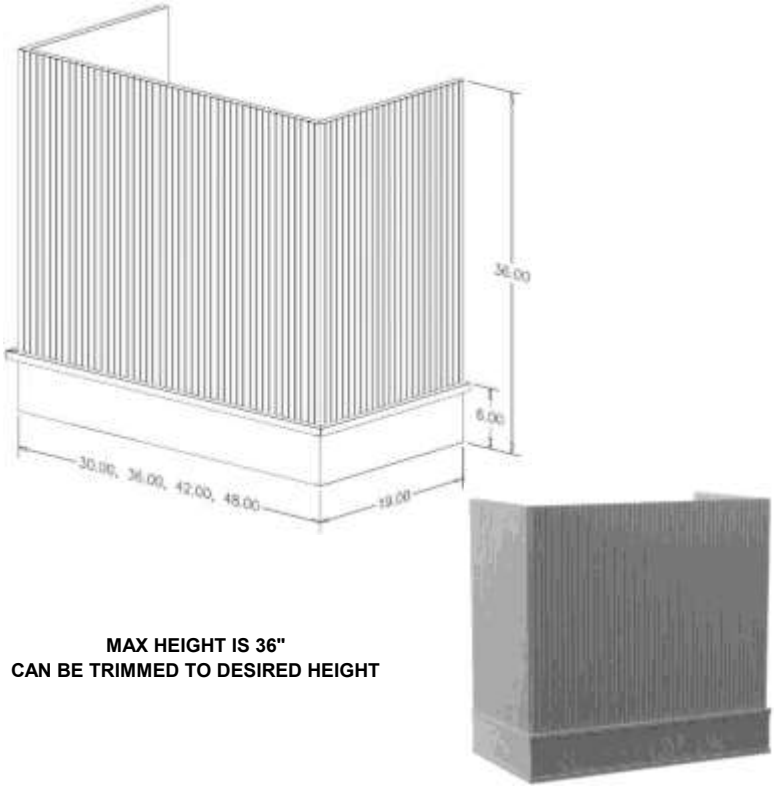

MAX HEIGHT IS 36"
CAN BE TRIMMED TO DESIRED HEIGHT

Available at 30", 36", 42" and 48" Wide		
OMEGA-R70301S30-TA	14100	EA
OMEGA-R70301S36-TA	15900	EA
OMEGA-R70301S42-TA	16800	EA
OMEGA-R70301S48-TA	17625	EA

Available in Cherry, Maple, Alder and Rift White Oak. N/A in Beech, Birch, Hickory, Rustic White Oak or White Oak. Clear Species will be used for wall hoods when ordering rustic species for cabinets. Maple will be substituted for Paint Grade - Maple. LINERS INCLUDED.

Omega National

RANGE HOODS - NO CUSTOM SIZES AVAILABLE

TWO-TONE ARTISAN RANGE HOOD
LINERS INCLUDED

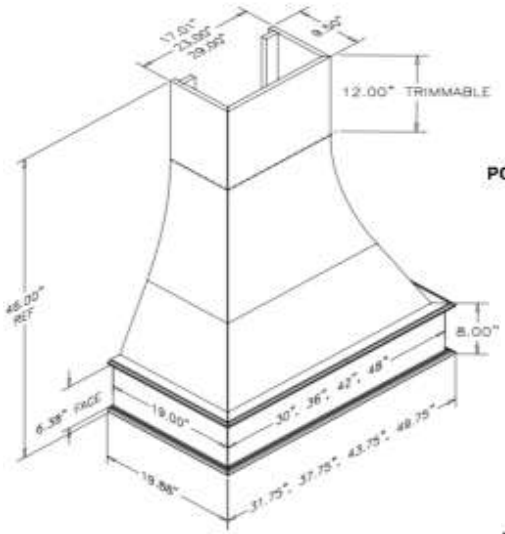

PGMCH=PGM/Cherry
PGMRO=PGM/Rift White Oak
PGMAL=PGM/Alder
PGMMA=PGM/Maple
PGMBI=PGM/Birch
PGMBE=PGM/Beech



TOP OF THE HOOD IS PAINT GRADE, BASE OF THE HOOD IS DESIRED WOOD SPECIES.

PLEASE SPECIFY COLORS IN NOTES

CHIMNEY EXTENSIONS NOT AVAILABLE WITH ARTISAN HOOD

Available at 30", 36", 42" and 48" Wide		
OMEGA-ARC30PGMCH	11850	EA
OMEGA-ARC30PGMRO	11850	EA
OMEGA-ARC30PGMAL	11850	EA
OMEGA-ARC30PGMMA	11850	EA
OMEGA-ARC30PGMBI	11850	EA
OMEGA-ARC30PGMBE	11850	EA
OMEGA-ARC36PGMCH	12900	EA
OMEGA-ARC36PGMRO	12900	EA
OMEGA-ARC36PGMAL	12900	EA
OMEGA-ARC36PGMMA	12900	EA
OMEGA-ARC36PGMBI	12900	EA
OMEGA-ARC36PGMBE	12900	EA
OMEGA-ARC42PGMCH	13500	EA
OMEGA-ARC42PGMRO	13500	EA
OMEGA-ARC42PGMAL	13500	EA
OMEGA-ARC42PGMMA	13500	EA
OMEGA-ARC42PGMBI	13500	EA
OMEGA-ARC42PGMBE	13500	EA
OMEGA-ARC48PGMCH	13800	EA
OMEGA-ARC48PGMRO	13800	EA
OMEGA-ARC48PGMAL	13800	EA
OMEGA-ARC48PGMMA	13800	EA
OMEGA-ARC48PGMBI	13800	EA
OMEGA-ARC48PGMBE	13800	EA

Available in Beech, Birch, Cherry, Maple, Alder and Rift White Oak. N/A in Hickory, Rustic White Oak or White Oak. Clear Species will be used for wall hoods when ordering rustic species for cabinets. Maple will be substituted for Paint Grade - Maple. LINERS INCLUDED.

ARTISAN RANGE HOOD
LINERS INCLUDED

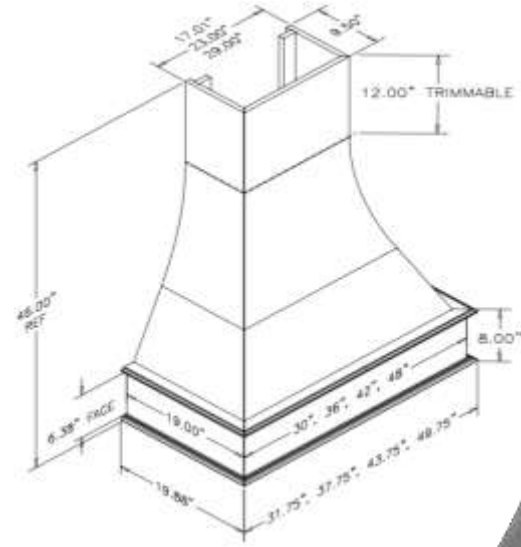

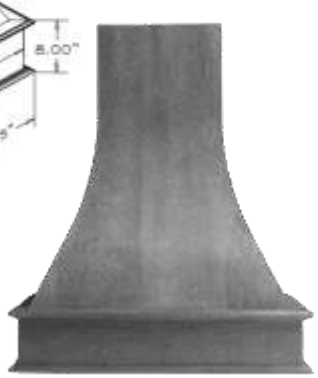

CHIMNEY EXTENSIONS NOT AVAILABLE WITH ARTISAN HOOD

Available at 30", 36", 42" and 48" Wide		
OMEGA-AR3030	9480	EA
OMEGA-AR3036	9972	EA
OMEGA-AR3042	10710	EA
OMEGA-AR3048	10830	EA

Available in Beech, Birch, Cherry, Maple, Alder and Rift White Oak. N/A in Hickory, Rustic White Oak or White Oak. Clear Species will be used for wall hoods when ordering rustic species for cabinets. Maple will be substituted for Paint Grade - Maple. LINERS INCLUDED.

Omega National

RANGE HOODS - NO CUSTOM SIZES AVAILABLE

SELECT SERIES WOOD RANGE HOOD - NO CUSTOM SIZES
LINERS INCLUDED

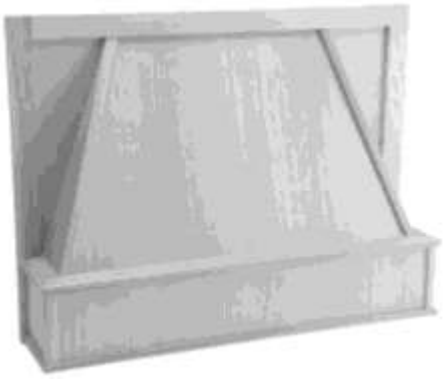

THIS RANGE HOOD IS DESIGNED TO FIT BETWEEN TWO CABINETS. SIDE EDGES ARE NOT FINISHED.

IF PLACED BETWEEN CABINETS THAT ARE SHORTER THAN THE HOOD YOU CAN USE A FILLER TO HIDE THE GROOVES THAT WILL BE EXPOSED ON THE HOOD.

30" x 24" Select Series Range Hood		
OMEGA-SSR1630SP	3450	EA
36" x 24" Select Series Range Hood		
OMEGA-SSR1636SP	3840	EA

Available in Beech, Birch, Cherry, Hickory, Maple, Alder and Rift White Oak. N/A in Beech, Birch, Rustic White Oak or White Oak. Clear Species will be used for wall hoods when ordering rustic species for cabinets. Maple will be substituted for Paint Grade - Maple. LINERS INCLUDED.

SIGNATURE MANTEL RANGE HOOD
LINERS INCLUDED

Silver metallic liner included.
Designed for Omega Broan ventilators.
Installation hardware included - Shelf and corbels come attached.
Shelf and corbels come attached.



INCLUDES DOORS

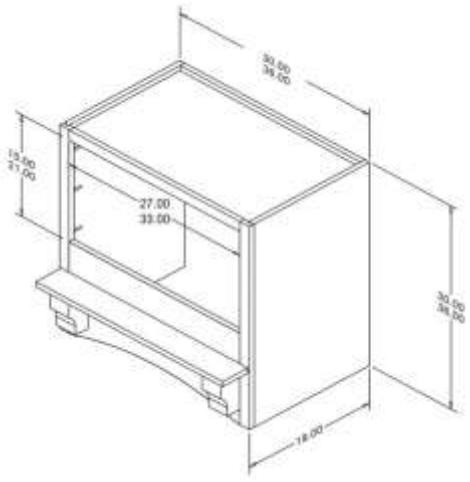

30" X 30" Signature Mantel Range Hood		
OMEGA-SM3030	7125	EA
30" X 36" Signature Mantel Range Hood		
OMEGA-SM3036	7545	EA
36" X 30" Signature Mantel Range Hood		
OMEGA-SM3630	7395	EA
36" X 36" Signature Mantel Range Hood		
OMEGA-SM3636	7755	EA

Available in Beech, Birch, Cherry, Hickory and Maple. N/A in Alder, Rift White Oak, Rustic White Oak or White Oak. Clear Species will be used for wall hoods when ordering rustic species for cabinets. Maple will be substituted for Paint Grade - Maple. LINERS INCLUDED.

Omega National

RANGE HOODS - NO CUSTOM SIZES AVAILABLE

30" TALL ACCENT RANGE HOOD
LINERS INCLUDED

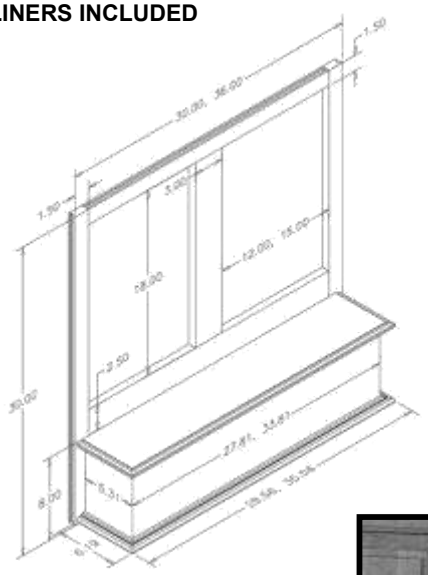



30" X 30" Accent Range Hood w/Straight Panel Front		
OMEGA-AR5030S-30	2865	EA
36" X 30" Accent Range Hood w/Straight Panel Front		
OMEGA-AR5036S-30	3375	EA

Available in Cherry, Hickory, Maple, Alder and Rift White Oak. N/A in Beech, Birch, Rustic White Oak or White Oak. Clear Species will be used for wall hoods when ordering rustic species for cabinets. Maple will be substituted for Paint Grade - Maple. LINERS INCLUDED.

24" TALL ESTATE RANGE HOOD
LINERS INCLUDED

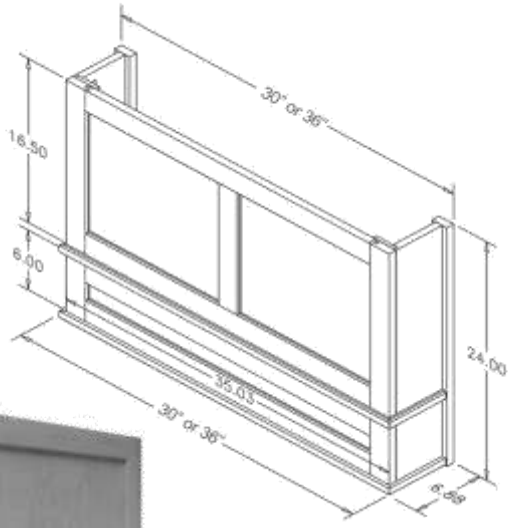



30" X 24" ESTATE SERIES CANOPY		
OMEGA-R19C830SMB	4950	EA
WILL BE A ONE PANEL HOOD		
36" X 24" ESTATE SERIES CANOPY		
OMEGA-R19C836SMB	5400	EA
WILL BE A TWO PANEL HOOD		

Available in Beech, Birch, Cherry, Hickory, Maple, Alder and Rift White Oak. N/A in Rustic White Oak or White Oak. Clear Species will be used for wall hoods when ordering rustic species for cabinets. Maple will be substituted for Paint Grade - Maple. LINERS INCLUDED.

Omega National

RANGE HOODS - NO CUSTOM SIZES AVAILABLE

30" TALL ESTATE RANGE HOOD
LINERS INCLUDED

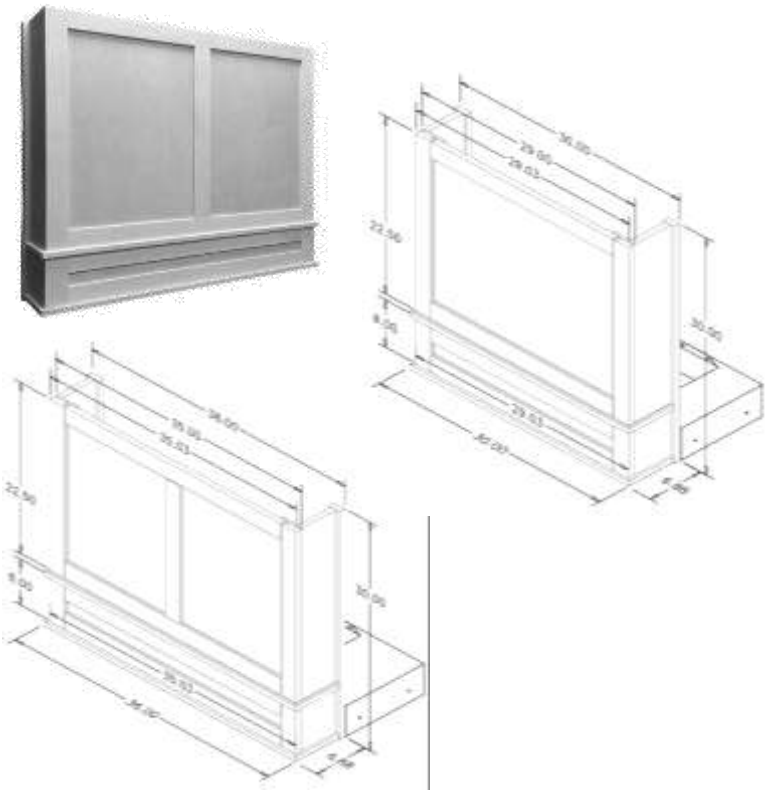

30" X 30" ESTATE SERIES CANOPY		
OMEGA-R19C530SMB	5400	EA
WILL BE A ONE PANEL HOOD		
36" X 30" ESTATE SERIES CANOPY		
OMEGA-R19C536SMB	5775	EA
WILL BE A TWO PANEL HOOD		

Available in Beech, Birch, Cherry, Hickory, Maple, Alder and Rift White Oak. N/A in Rustic White Oak or White Oak. Clear Species will be used for wall hoods when ordering rustic species for cabinets. Maple will be substituted for Paint Grade - Maple. LINERS INCLUDED.

36" TALL ESTATE RANGE HOOD
LINERS INCLUDED

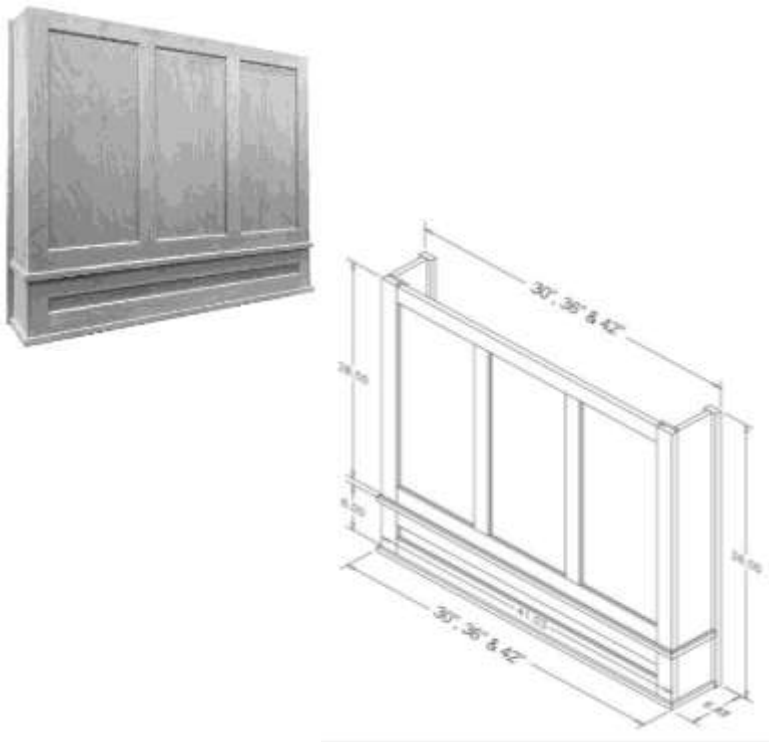

30" X 36" ESTATE SERIES CANOPY		
OMEGA-R19C930SMB	6225	EA
WILL BE A ONE PANEL HOOD		
36" X 36" ESTATE SERIES CANOPY		
OMEGA-R19C936SMB	6600	EA
WILL BE A TWO PANEL HOOD		
42" X 36" ESTATE SERIES CANOPY		
OMEGA-R19C942SMB	6900	EA
WILL BE A THREE PANEL HOOD		

Available in Beech, Birch, Cherry, Hickory, Maple, Alder and Rift White Oak. N/A in Rustic White Oak or White Oak. Clear Species will be used for wall hoods when ordering rustic species for cabinets. Maple will be substituted for Paint Grade - Maple. LINERS INCLUDED.

Omega National

RANGE HOODS - NO CUSTOM SIZES AVAILABLE

42" TALL WATERFALL RANGE HOOD

LINERS INCLUDED

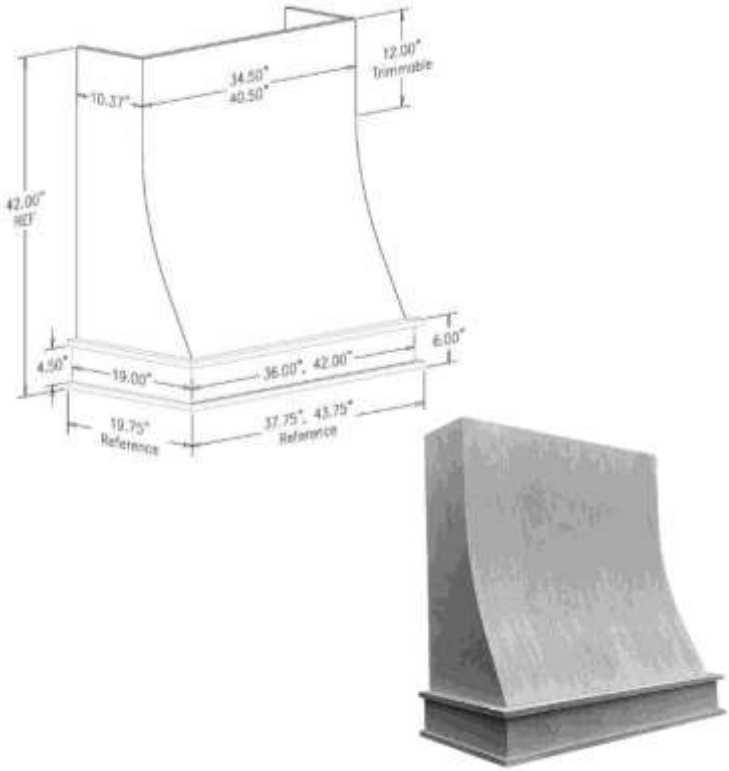

36" X 42" WATERFALL SERIES RANGE HOOD		
OMEGA-R30C36SMB	10200	EA

42" X 42" WATERFALL SERIES RANGE HOOD		
OMEGA-R30C42SMB	11700	EA

Available in Beech, Birch, Cherry, Maple, Alder and Rift White Oak. N/A in Hickory, Rustic White Oak or White Oak. Clear Species will be used for wall hoods when ordering rustic species for cabinets. Maple will be substituted for Paint Grade - Maple. LINERS INCLUDED.

42" TALL OMNI RANGE HOOD

LINERS INCLUDED

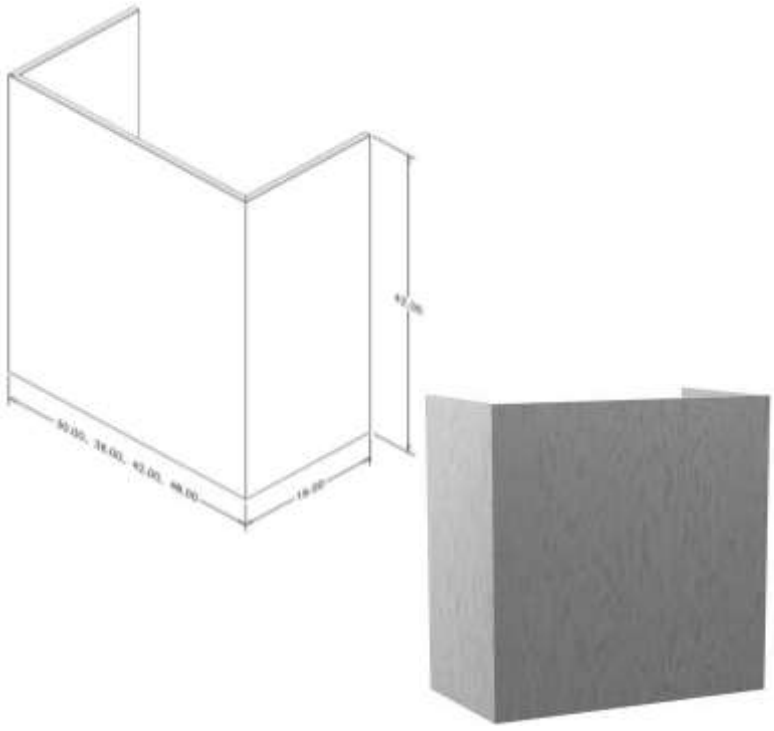

Available at 30", 36", 42" and 48" Wide		
OMEGA-RO7A30	6150	EA
OMEGA-RO7A36	6750	EA
OMEGA-RO7A42	7200	EA
OMEGA-RO7A48	7500	EA

Available in Birch, Cherry, Maple, Alder and Rift White Oak. N/A in Beech, Hickory, Rustic White Oak or White Oak. Clear Species will be used for wall hoods when ordering rustic species for cabinets. Maple will be substituted for Paint Grade - Maple. LINERS INCLUDED.

Omega National

RANGE HOODS - NO CUSTOM SIZES AVAILABLE

MODERN FARMHOUSE SHIPLAP TAPERED

LINERS INCLUDED

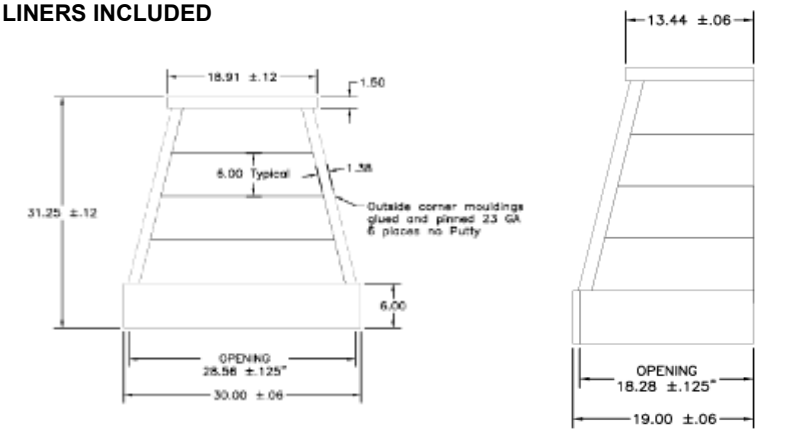

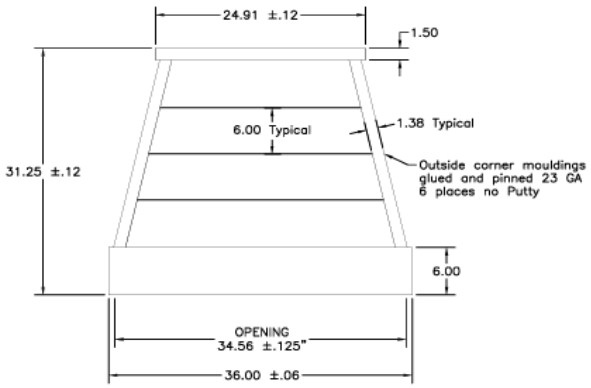

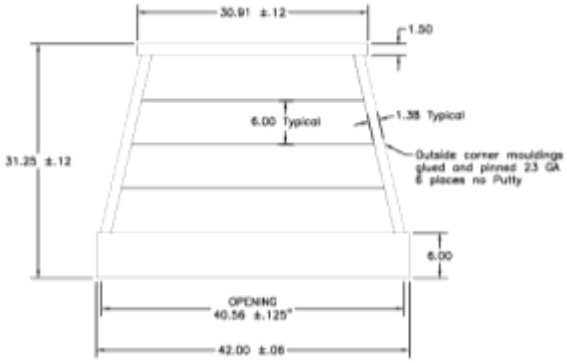

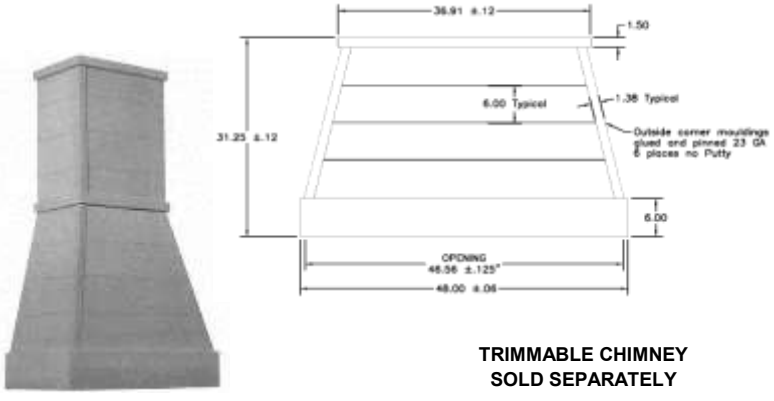

TRIMMABLE CHIMNEY SOLD SEPARATELY

Available at 30", 36", 42" and 48" Wide		
OMEGA-FT30SMB	6540	EA
OMEGA-FT36SMB	6690	EA
OMEGA-FT42SMB	6900	EA
OMEGA-FT48SMB	7200	EA

Available in Beech, Birch, Cherry, Hickory, Maple, Alder and Rift White Oak. N/A in Rustic White Oak or White Oak. Clear Species will be used for wall hoods when ordering rustic species for cabinets. Maple will be substituted for Paint Grade - Maple. LINERS INCLUDED.

Omega National

RANGE HOODS - NO CUSTOM SIZES AVAILABLE

MATCHING TRIMMABLE CHIMNEY
INCLUDES 2 MOUNTING BOARDS
***SIGNATURE SERIES**

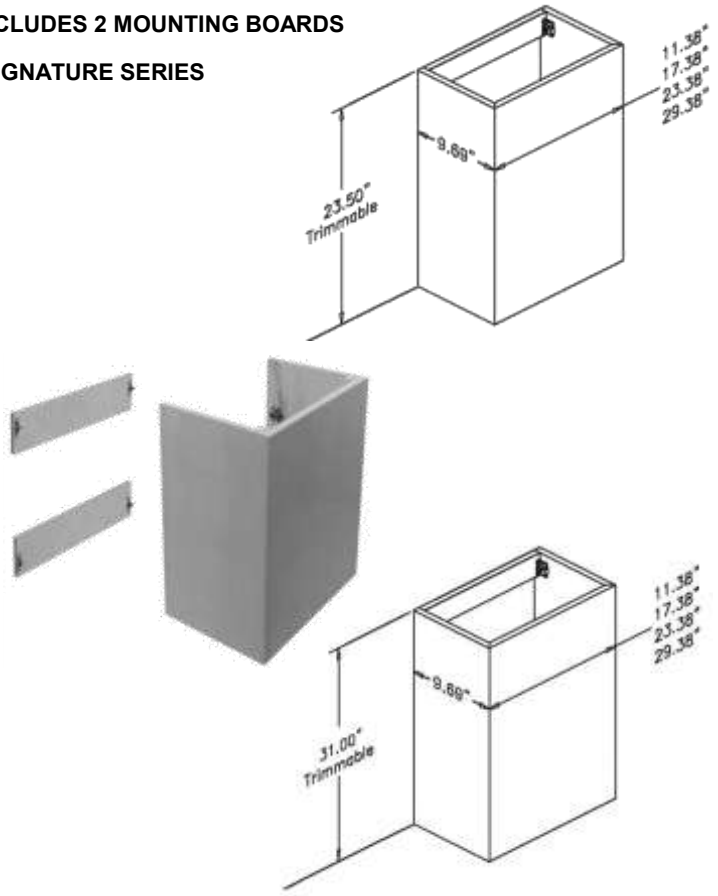

23 1/2" Tall Trimmable Chimney		
OMEGA-RCH30	1650	EA
OMEGA-RCH36	1800	EA
OMEGA-RCH42	1875	EA
OMEGA-RCH48	1980	EA

31" Tall Trimmable Chimney		
OMEGA-RCHT30	1830	EA
OMEGA-RCHT36	2040	EA
OMEGA-RCHT42	2100	EA
OMEGA-RCHT48	2340	EA

Available in Beech, Birch, Cherry, Hickory, Maple, Alder and Rift White Oak. N/A in Rustic White Oak or White Oak. Clear Species will be used for wall hoods when ordering rustic species for cabinets. Maple will be substituted for Paint Grade - Maple. LINERS INCLUDED.

FARMHOUSE TRIMMABLE CHIMNEY- 23 1/2" TALL

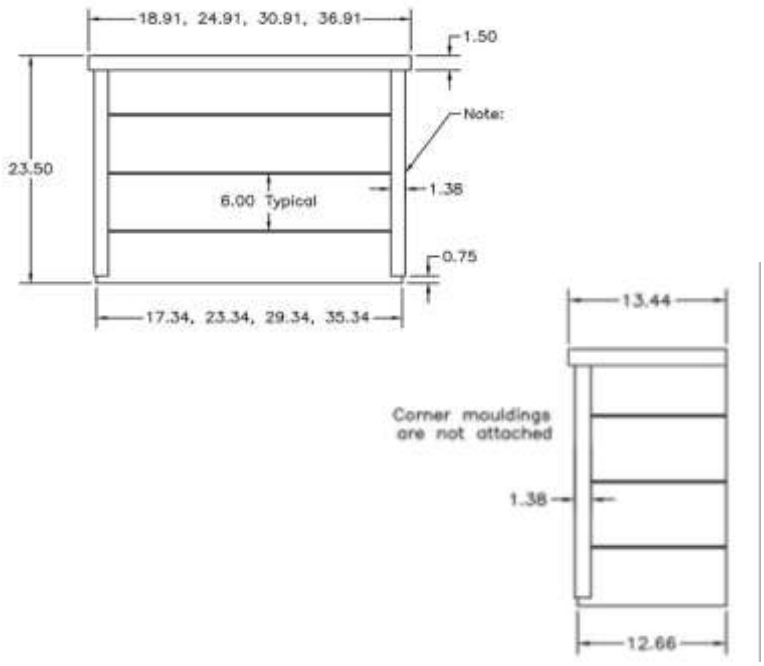

23 1/2" Tall Trimmable Chimney		
OMEGA-FCH30	2265	EA
OMEGA-FCH36	2319	EA
OMEGA-FCH42	2355	EA
OMEGA-FCH48	2535	EA

Available in Beech, Birch, Cherry, Hickory, Maple, Alder and Rift White Oak. N/A in Rustic White Oak or White Oak. Clear Species will be used for wall hoods when ordering rustic species for cabinets. Maple will be substituted for Paint Grade - Maple. LINERS INCLUDED.

Omega National

BLOWERS

Broan Ventilation Power Module for Omega Hoods 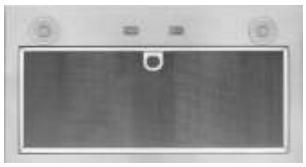 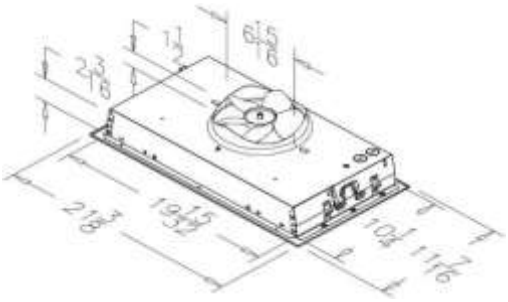 • 260 CFM/7 sones [high]- 2-speed rocker switch • Bright LED lighting [more than 250 lumens] • Quick-release diswasher safe mesh aluminum filter • Stainless steel	**OMEGA-PM300** Uses Ductless Conversion Kit OMEGA-90360DUC1	1824	EA
Broan Ventilation Power Module for Omega hoods  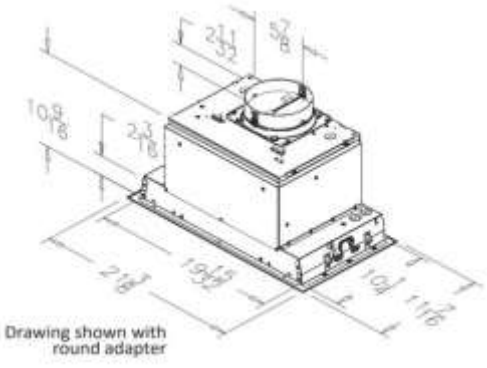 • 400 CFM/6.5 sones [high] - 3-speed rotary switch • Two bright LED lights [250 lumens] • Quick-release diswasher safe mesh aluminum filter • Heat Sentry technology auto turns on when excessive heat is detected • Stainless steel	**OMEGA-PM400** Uses Ductless Conversion Kit OMEGA-90360DUC1	3600	EA
Broan Ventilation Power Module for Omega Hoods  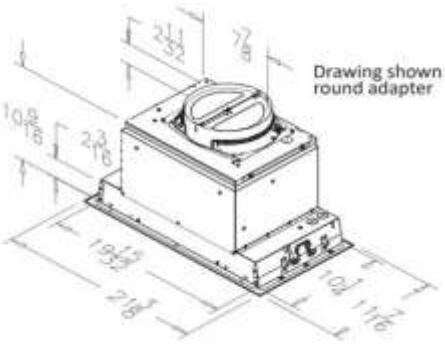 • 600 CFM/9.5 sones [high] - 4-speed electronic soft touch controls • 3-level LED lighting [nore than 300 lumens • Baffle-style quick release filter - dishwasher safe • Heat Sentry technology auto turns on when excessive heat is detected • Wifi enabled • Voice Control • Stainless steel	**OMEGA-PM600** Uses Ductless Conversion Kit OMEGA-90360DUC1	6600	EA

Please note, we are not liable or responsible for determining the correct ventilation for each hood.

Omega National

DUCTWORK KIT

FOR USE WITH ALL THREE BROAN VENTILATION UNITS ON PAGE 136



OMEGA-90360DUC1	1125	EA

NOTES OR ADDITIONS

Stanisci Design

FRAME AND PANEL COMBINATIONS THAT WILL BE USED FOR DOOR STYLE

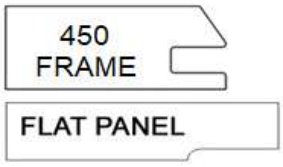

ASPEN15
AUGUSTA15
BEDFORD
CENTENNIAL15
CHARLESTON15
LIBERTY
SAVANNAH15

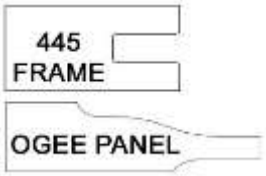

HASTINGS15
NORFOLK15

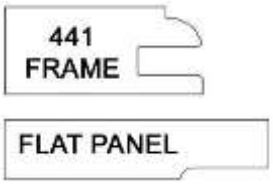

FRANKLIN
MADISON (WILL HAVE FLAT PANEL)
ORLEANS (WILL HAVE FLAT PANEL)
PRAIRIE
VICKSBURG

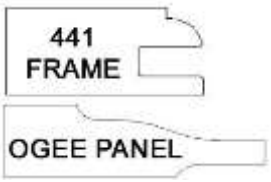

SENECA

446 FRAME/FLAT PANEL

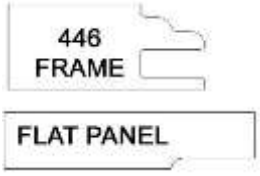

RIDGEGATE

HOOD WILL NOT HAVE MITERED JOINTS

446 FRAME/OGEE PANEL

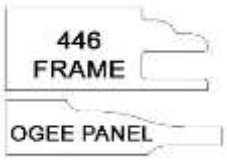

REGENCY

HOOD WILL NOT HAVE MITERED JOINTS

443 FRAME/FLAT PANEL

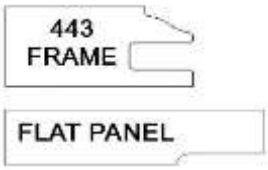

BRISTOL
FAIRWAY

443 FRAME/OGEE PANEL

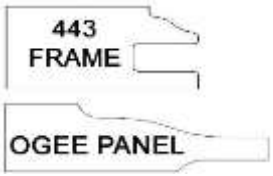

EASTON

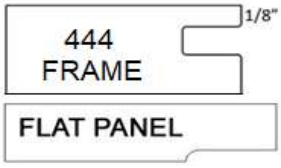

PLATEAU

WHEN DOOR STYLE IS MADISON OR ORLEANS, THE HOODS WITH DOORS WILL BE FLAT PANEL AND NOT BEADED

CLASSIC MOLDING IS STANDARD ON THE S SERIES HOODS
ADDITIONAL MOLDINGS AVAILABLE WITH MOD - SEE PAGE 365



STANISCI-SCLASSIC
STANDARD ON ALL S-SERIES



S-SERIES BASIC MOLDING
MOD CODE: STANISCI-BASIC



S-SERIES SIMPLE MOLDING
MOD CODE: STANISCI-SIMPLE

FOR MORE OPTIONS VISIT WOOD-HOOD.COM

FOR CUSTOM QUOTES CONTACT
THE CABINET OFFICE AT 877-540-5624 OR ORDERS@KOCHCABINET.COM

REDUCE HEIGHT ONLY MOD FOR 30" HOODS AND TALLER - STANISCI-HOOD-RH

THE RAISED PANEL PORTION OF THE HOOD AND THE PANEL PROFILES WILL NOT MATCH PERFECTLY TO OUR CABINET DOOR STYLES

Stanisci Design

RANGE HOODS

S SERIES STANDARD HOOD

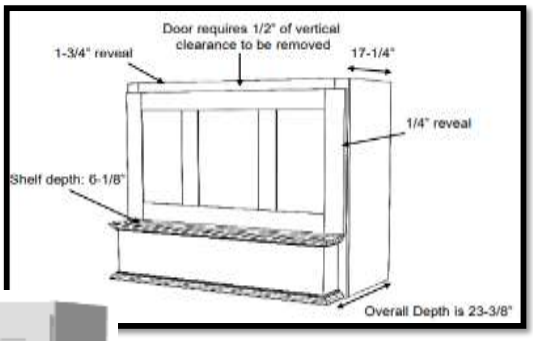

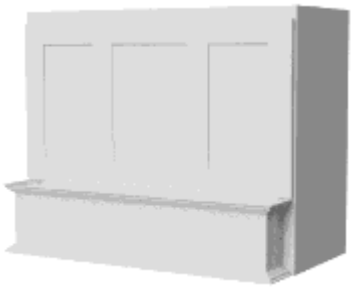

THE UPPER PANEL IS REMOVABLE, WHICH WILL ALLOW FOR EASIER INSTALLATION AND VENTILATION INSPECTION. DOOR REQUIRES 1/2" OF VERTICAL CLEARANCE TO BE REMOVED.

SEE PAGE 144 FOR MOLDING OPTIONS

33" Wide Hood		
STANISCI-S3324	11961	EA
STANISCI-S3330	12339	EA
STANISCI-S3336	12717	EA
STANISCI-S3342	13233	EA
39" Wide Hood		
STANISCI-S3924	12264	EA
STANISCI-S3930	12705	EA
STANISCI-S3936	13131	EA
STANISCI-S3942	13698	EA
45" Wide Hood		
STANISCI-S4524	12666	EA
STANISCI-S4530	13182	EA
STANISCI-S4536	13659	EA
STANISCI-S4542	14238	EA
51" Wide Hood		
STANISCI-S5124	13245	EA
STANISCI-S5130	13773	EA
STANISCI-S5136	14313	EA
STANISCI-S5142	14967	EA

S SERIES RAISED PANEL SQUARE BASE

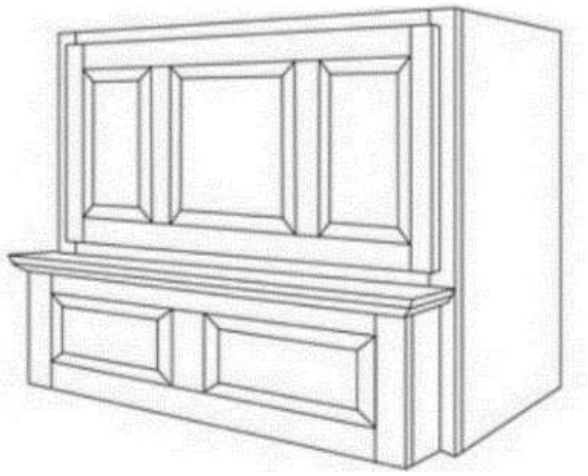

THE UPPER PANEL IS REMOVABLE, WHICH WILL ALLOW FOR EASIER INSTALLATION AND VENTILATION INSPECTION. DOOR REQUIRES 1/2" OF VERTICAL CLEARANCE TO BE REMOVED.

SEE PAGE 144 FOR MOLDING OPTIONS

THE RAISED PANEL PORTION OF THE HOOD AND THE PANEL PROFILES WILL NOT MATCH PERFECTLY TO OUR CABINET DOOR STYLES

33" Wide Hood		
STANISCI-SR3324	12162	EA
STANISCI-SR3330	12540	EA
STANISCI-SR3336	12918	EA
STANISCI-SR3342	13419	EA
39" Wide Hood		
STANISCI-SR3924	12516	EA
STANISCI-SR3930	12954	EA
STANISCI-SR3936	13395	EA
STANISCI-SR3942	13947	EA
45" Wide Hood		
STANISCI-SR4524	12993	EA
STANISCI-SR4530	13497	EA
STANISCI-SR4536	13974	EA
STANISCI-SR4542	14553	EA
51" Wide Hood		
STANISCI-SR5124	13647	EA
STANISCI-SR5130	14175	EA
STANISCI-SR5136	14715	EA
STANISCI-SR5142	15369	EA

Order Ventilator/Liner 3" less in width than wall hood

Available in *Cherry, Paint Grade, Maple, White Oak, Knotty Alder, Hickory and Rift White Oak.
*Clear Species will be used for wall hoods when ordering a rustic species for cabinets. **Not available in Birch or Beech.**

Stanisci Design

RANGE HOODS

EASTLAND E300 SERIES WITH STANDARD BASE



6" TALL BASE
VERTICAL GRAIN ON FRONT PANEL

30" Wide Hood		
STANISCI-EA3024	17265	EA
STANISCI-EA3030	17958	EA
STANISCI-EA3036	18636	EA
STANISCI-EA3042	19578	EA
STANISCI-EA3048	20523	EA
36" Wide Hood		
STANISCI-EA3624	17808	EA
STANISCI-EA3630	18624	EA
STANISCI-EA3636	19416	EA
STANISCI-EA3642	20445	EA
STANISCI-EA3648	21777	EA
42" Wide Hood		
STANISCI-EA4224	18549	EA
STANISCI-EA4230	19503	EA
STANISCI-EA4236	20382	EA
STANISCI-EA4242	21453	EA
STANISCI-EA4248	22521	EA
48" Wide Hood		
STANISCI-EA4824	19629	EA
STANISCI-EA4830	20598	EA
STANISCI-EA4836	21576	EA
STANISCI-EA4842	22785	EA
STANISCI-EA4848	23991	EA

ERWIN ER200 SERIES WITH HARDWOOD BASE

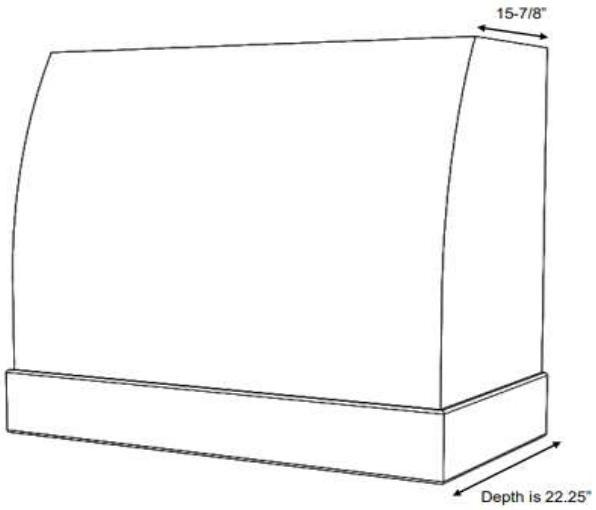

30" Wide Hood		
STANISCI-ER3030	19215	EA
STANISCI-ER3036	19893	EA
STANISCI-ER3042	20835	EA
STANISCI-ER3048	21777	EA
STANISCI-ER3054	22548	EA
36" Wide Hood		
STANISCI-ER3630	19881	EA
STANISCI-ER3636	20673	EA
STANISCI-ER3642	21702	EA
STANISCI-ER3648	22734	EA
STANISCI-ER3654	23508	EA
42" Wide Hood		
STANISCI-ER4230	20760	EA
STANISCI-ER4236	21639	EA
STANISCI-ER4242	22710	EA
STANISCI-ER4248	23808	EA
STANISCI-ER4254	24552	EA
48" Wide Hood		
STANISCI-ER4830	21855	EA
STANISCI-ER4836	22833	EA
STANISCI-ER4842	24042	EA
STANISCI-ER4848	25248	EA

ADD BATTENS TO HOODS



EASTLAND BATTEN

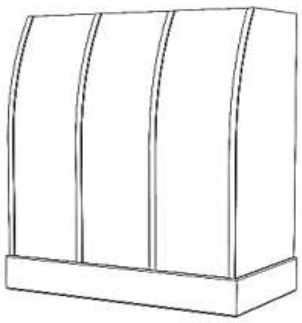

ERWIN BATTEN

30" TO 48" WIDE WILL HAVE 4 BATTENS

EASTLAND BATTEN	2700	PC
ERWIN BATTEN	2700	PC

Available in *Cherry, Paint Grade, Maple, White Oak, Knotty Alder, Hickory and Rift White Oak.
*Clear Species will be used for wall hoods when ordering a rustic species for cabinets. **Not available in Birch or Beech.**

Stanisci Design

RANGE HOODS

ELEGANCE E200 SERIES WITH HARDWOOD BASE

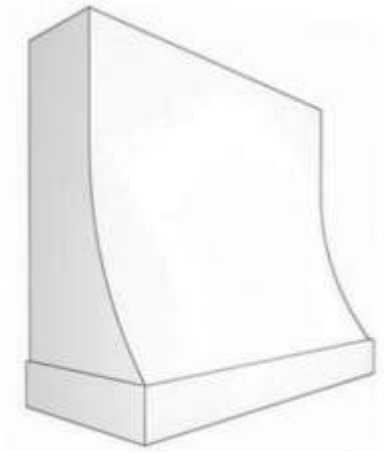

6" TALL BASE
HORIZONTAL GRAIN ON LOWER SECTION

30" Wide Hood		
STANISCI-EHW3024	18522	EA
STANISCI-EHW3030	19215	EA
STANISCI-EHW3036	19893	EA
STANISCI-EHW3042	20835	EA
STANISCI-EHW3048	21777	EA
36" Wide Hood		
STANISCI-EHW3624	19065	EA
STANISCI-EHW3630	19881	EA
STANISCI-EHW3636	20673	EA
STANISCI-EHW3642	21702	EA
STANISCI-EHW3648	22734	EA
42" Wide Hood		
STANISCI-EHW4224	19806	EA
STANISCI-EHW4230	20760	EA
STANISCI-EHW4236	21639	EA
STANISCI-EHW4242	22710	EA
STANISCI-EHW4248	23778	EA
48" Wide Hood		
STANISCI-EHW4824	20886	EA
STANISCI-EHW4830	21855	EA
STANISCI-EHW4836	22833	EA
STANISCI-EHW4842	24042	EA
STANISCI-EHW4848	25248	EA
STANISCI-CRTOP	0	EA
(REMOVABLE TOP)		

ELEGANCE E200 SERIES WITH STANDARD BASE

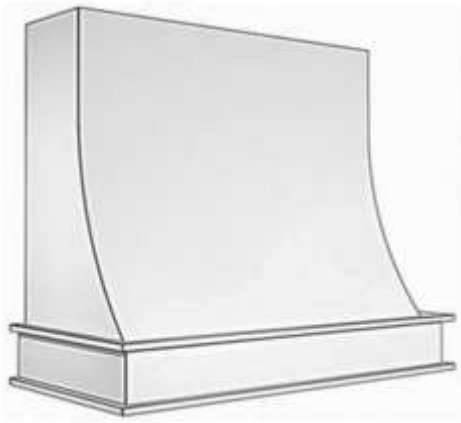

6" TALL BASE
HORIZONTAL GRAIN ON LOWER SECTION

MOLDINGS ADD 2 1/4" TO THE WIDTH

30" Wide Hood		
STANISCI-EPL3024	18522	EA
STANISCI-EPL3030	19215	EA
STANISCI-EPL3036	19893	EA
STANISCI-EPL3042	20835	EA
STANISCI-EPL3048	21777	EA
36" Wide Hood		
STANISCI-EPL3624	19065	EA
STANISCI-EPL3630	19881	EA
STANISCI-EPL3636	20673	EA
STANISCI-EPL3642	21702	EA
STANISCI-EPL3648	22734	EA
42" Wide Hood		
STANISCI-EPL4224	19806	EA
STANISCI-EPL4230	20760	EA
STANISCI-EPL4236	21639	EA
STANISCI-EPL4242	22710	EA
STANISCI-EPL4248	23778	EA
48" Wide Hood		
STANISCI-EPL4824	20886	EA
STANISCI-EPL4830	21855	EA
STANISCI-EPL4836	22833	EA
STANISCI-EPL4842	24042	EA
STANISCI-EPL4848	25248	EA
STANISCI-CRTOP	0	EA
(REMOVABLE TOP)		

ADD BATTENS TO HOODS



30" TO 48" WIDE WILL HAVE 4 BATTENS

ELEGANCE BATTEN	2700	PC

Available in *Cherry, Paint Grade, Maple, White Oak, Knotty Alder, Hickory and Rift White Oak.
*Clear Species will be used for wall hoods when ordering a rustic species for cabinets. **Not available in Birch or Beech.**

Stanisci Design

RANGE HOODS

FANFARE FX200 SERIES WITH HARDWOOD BASE



6" BASE

30" Wide Hood		
STANISCI-FXH3030	11259	EA
STANISCI-FXH3036	11409	EA
STANISCI-FXH3042	11559	EA
36" Wide Hood		
STANISCI-FXH3630	11649	EA
STANISCI-FXH3636	11811	EA
STANISCI-FXH3642	11976	EA
42" Wide Hood		
STANISCI-FXH4230	11811	EA
STANISCI-FXH4236	11976	EA
STANISCI-FXH4242	12138	EA
48" Wide Hood		
STANISCI-FXH4830	11976	EA
STANISCI-FXH4836	12138	EA
STANISCI-FXH4842	12303	EA
STANISCI-CRTOP	0	EA
(REMOVABLE TOP)		

FANFARE FX200 SERIES WITH PLAIN BASE

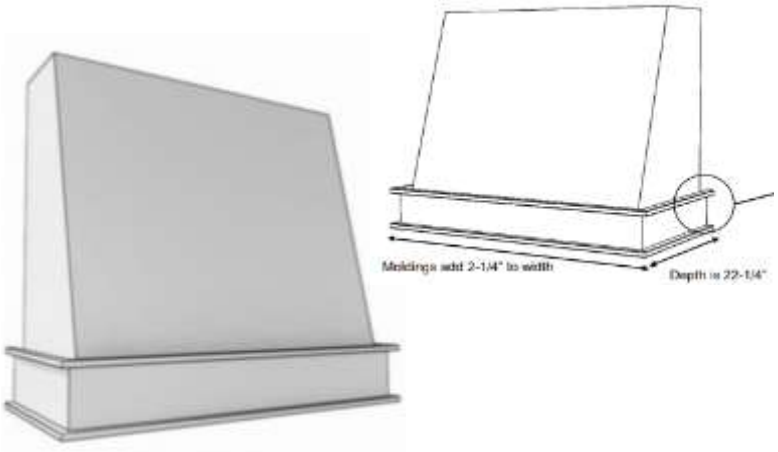

MOLDINGS ADD 2 1/4" TO THE WIDTH
6" BASE / DEPTH IS 22 1/4"

30" Wide Hood		
STANISCI-FXP3030	11712	EA
STANISCI-FXP3036	11862	EA
STANISCI-FXP3042	12024	EA
36" Wide Hood		
STANISCI-FXP3630	12126	EA
STANISCI-FXP3636	12288	EA
STANISCI-FXP3642	12465	EA
42" Wide Hood		
STANISCI-FXP4230	12288	EA
STANISCI-FXP4236	12465	EA
STANISCI-FXP4242	12642	EA
48" Wide Hood		
STANISCI-FXP4830	12465	EA
STANISCI-FXP4836	12642	EA
STANISCI-FXP4842	12816	EA
STANISCI-CRTOP	0	EA
(REMOVABLE TOP)		

ADD BATTENS TO HOODS



30" TO 48" WIDE WILL HAVE 4 BATTENS

FANFARE BATTEN	1500	PC

Available in *Cherry, Paint Grade, Maple, White Oak, Knotty Alder, Hickory and Rift White Oak.
*Clear Species will be used for wall hoods when ordering a rustic species for cabinets. **Not available in Birch or Beech.**

Stanisci Design

RANGE HOODS

CAMBRIDGE SERIES WITH STANDARD HARDWOOD BASE



30" Wide Hood			
STANISCI-CS3030		11259	EA
STANISCI-CS3036		11409	EA
STANISCI-CS3042		11559	EA
STANISCI-CS3048		11724	EA
36" Wide Hood			
STANISCI-CS3630		11649	EA
STANISCI-CS3636		11811	EA
STANISCI-CS3642		11976	EA
STANISCI-CS3648		12138	EA
42" Wide Hood			
STANISCI-CS4230		11811	EA
STANISCI-CS4236		11976	EA
STANISCI-CS4242		12138	EA
STANISCI-CS4248		12303	EA
48" Wide Hood			
STANISCI-CS4830		11976	EA
STANISCI-CS4836		12138	EA
STANISCI-CS4842		12303	EA
STANISCI-CS4848		12477	EA
STANISCI-CRTOP	REMOVABLE TOP	0	EA

CAMBRIDGE SERIES WITH HORIZONTAL BEADED OPTION

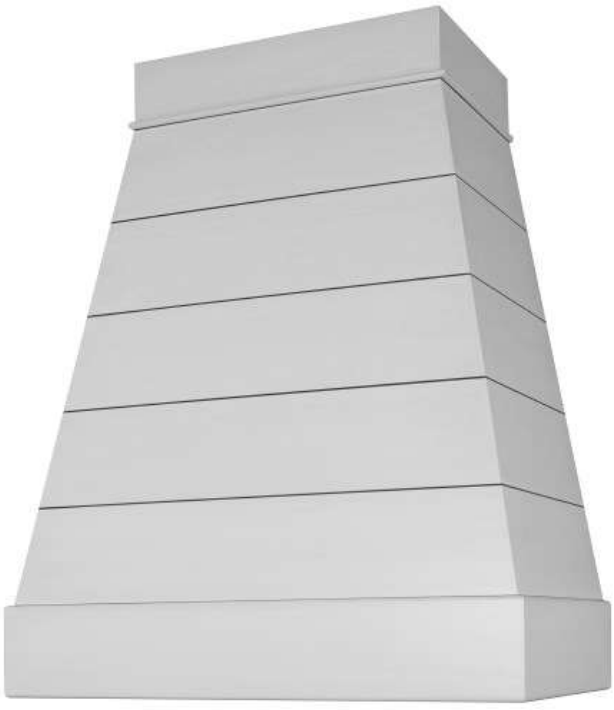

30" Wide Hood			
STANISCI-CB3030		12564	EA
STANISCI-CB3036		12714	EA
STANISCI-CB3042		12867	EA
STANISCI-CB3048		13029	EA
36" Wide Hood			
STANISCI-CB3630		12954	EA
STANISCI-CB3636		13116	EA
STANISCI-CB3642		13281	EA
STANISCI-CB3648		13443	EA
42" Wide Hood			
STANISCI-CB4230		13116	EA
STANISCI-CB4236		13281	EA
STANISCI-CB4242		13443	EA
STANISCI-CB4248		13608	EA
48" Wide Hood			
STANISCI-CB4830		13281	EA
STANISCI-CB4836		13443	EA
STANISCI-CB4842		13608	EA
STANISCI-CB4848		13782	EA
STANISCI-CRTOP	REMOVABLE TOP	0	EA

Available in *Cherry, Paint Grade, Maple, White Oak, Knotty Alder, Hickory and Rift White Oak.
*Clear Species will be used for wall hoods when ordering a rustic species for cabinets. **Not available in Birch or Beech.**

STANISCI HOOD AND VENTILATORS

BRISTOL BX STANDARD

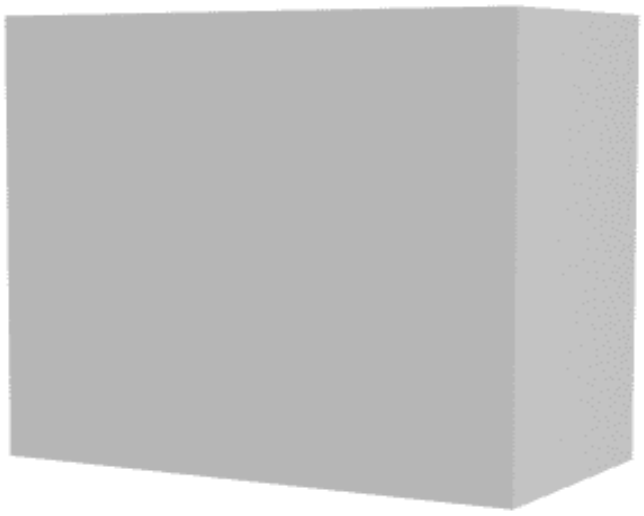

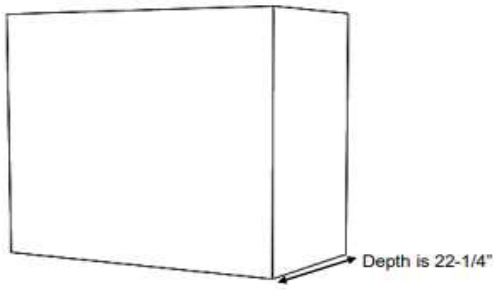

30" Wide Hood			
STANISCI-BXS3030		9360	EA
STANISCI-BXS3036		9651	EA
STANISCI-BXS3042		9951	EA
36" Wide Hood			
STANISCI-BXS3630		9636	EA
STANISCI-BXS3636		9963	EA
STANISCI-BXS3642		10317	EA
42" Wide Hood			
STANISCI-BXS4230		10002	EA
STANISCI-BXS4236		10365	EA
STANISCI-BXS4242		10755	EA
48" Wide Hood			
STANISCI-BXS4830		10455	EA
STANISCI-BXS4836		10869	EA
STANISCI-BXS4842		11295	EA

BRISTOL SERIES WITH HORIZONTAL BEADED OPTION



30" Wide Hood			
STANISCI-BXB3030		10665	EA
STANISCI-BXB3036		10959	EA
STANISCI-BXB3042		11256	EA
36" Wide Hood			
STANISCI-BXB3630		10944	EA
STANISCI-BXB3636		11268	EA
STANISCI-BXB3642		11622	EA
42" Wide Hood			
STANISCI-BXB4230		11307	EA
STANISCI-BXB4236		11673	EA
STANISCI-BXB4242		12060	EA
48" Wide Hood			
STANISCI-BXB4830		11760	EA
STANISCI-BXB4836		12174	EA
STANISCI-BXB4842		13005	EA

Available in *Cherry, Paint Grade, Maple, White Oak, Knotty Alder, Hickory and Rift White Oak.
*Clear Species will be used for wall hoods when ordering a rustic species for cabinets. **Not available in Birch or Beech.**

STANISCI HOOD AND VENTILATORS

PLYMOUTH STANDARD HOOD



33" Wide Hood			
STANISCI-PS3330		9801	EA
STANISCI-PS3336		9990	EA
STANISCI-PS3342		10380	EA
39" Wide Hood			
STANISCI-PS3930		10089	EA
STANISCI-PS3936		10278	EA
STANISCI-PS3942		10680	EA
45" Wide Hood			
STANISCI-PS4530		10416	EA
STANISCI-PS4536		10605	EA
STANISCI-PS4542		10995	EA
51" Wide Hood			
STANISCI-PS5130		10731	EA
STANISCI-PS5136		10893	EA
STANISCI-PS5142		11310	EA

Order Ventilator/Liner 3" less in width than wall hood

PLYMOUTH STANDARD HOOD WITH BATTEN



33" AND 45" WIDE WILL HAVE 4 BATTENS
51" WIDE WILL HAVE 5 BATTENS

33" Wide Hood			
STANISCI-PB3330		11301	EA
STANISCI-PB3336		11490	EA
STANISCI-PB3342		11880	EA
39" Wide Hood			
STANISCI-PB3930		11589	EA
STANISCI-PB3936		11778	EA
STANISCI-PB3942		12180	EA
45" Wide Hood			
STANISCI-PB4530		11916	EA
STANISCI-PB4536		12105	EA
STANISCI-PB4542		12495	EA
51" Wide Hood			
STANISCI-PB5130		12231	EA
STANISCI-PB5136		12393	EA
STANISCI-PB5142		12810	EA

Order Ventilator/Liner 3" less in width than wall hood

RF (Removable Front Option) - P Example
BOX IS 16" DEEP RATHER THAN THE STANDARD 12"
THERE IS A REVEAL OF 5/16" ON FRONT OF BOX
MUST BE ABLE TO LIFT FACE UP AT LEAST 3/4" TO SET FACE IN CLIPS

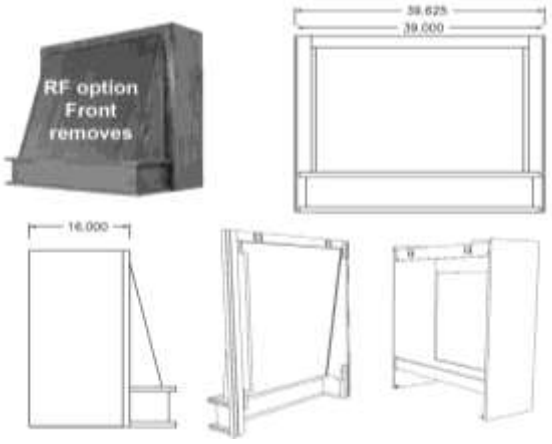

MOD FOR REMOVABLE FRONT			
STANISCI-PRF		0	NC

Available in *Cherry, Paint Grade, Maple, White Oak, Knotty Alder, Hickory and Rift White Oak.
*Clear Species will be used for wall hoods when ordering a rustic species for cabinets. **Not available in Birch or Beech.**

STANISCI HOOD AND VENTILATORS

FOXCOTE FX300 SERIES WITH TWO PANEL TOP & ONE PANEL BASE



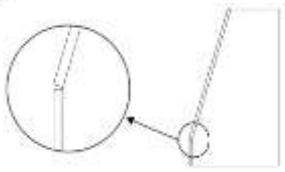

THE UPPER PANEL IS REMOVABLE, WHICH WILL ALLOW FOR EASIER INSTALLATION AND VENTILATION INSPECTION

30" Wide Hood			
STANISCI-FC23024		11232	EA
STANISCI-FC23030		11685	EA
STANISCI-FC23036		12126	EA
STANISCI-FC23042		12690	EA
36" Wide Hood			
STANISCI-FC23624		11610	EA
STANISCI-FC23630		12150	EA
STANISCI-FC23636		12678	EA
STANISCI-FC23642		13308	EA
42" Wide Hood			
STANISCI-FC24224		12087	EA
STANISCI-FC24230		12717	EA
STANISCI-FC24236		13308	EA
STANISCI-FC24242		13986	EA
48" Wide Hood			
STANISCI-FC24824		12678	EA
STANISCI-FC24830		13332	EA
STANISCI-FC24836		13998	EA
STANISCI-FC24842		14766	EA

AXTON SERIES HOOD





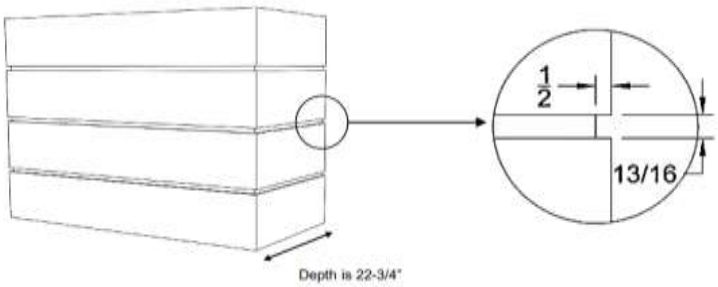

AXTON SERIES HOOD WITH 3 SLATS			
31" Wide Hood			
STANISCI-AX33130		15876	EA
STANISCI-AX33136		16470	EA
STANISCI-AX33142		17094	EA
STANISCI-AX33148		17715	EA
37" Wide Hood			
STANISCI-AX33730		16446	EA
STANISCI-AX33736		16818	EA
STANISCI-AX33742		17844	EA
STANISCI-AX33748		18570	EA
43" Wide Hood			
STANISCI-AX34330		17196	EA
STANISCI-AX34336		17946	EA
STANISCI-AX34342		18756	EA
STANISCI-AX34348		19554	EA
49" Wide Hood			
STANISCI-AX34930		18129	EA
STANISCI-AX34936		15984	EA
STANISCI-AX34942		19863	EA
STANISCI-AX34948		20745	EA
AXTON SERIES HOOD WITH 4 SLATS			
31" Wide Hood			
STANISCI-AX43130		16098	EA
STANISCI-AX43136		16707	EA
STANISCI-AX43142		17340	EA
STANISCI-AX43148		17973	EA
37" Wide Hood			
STANISCI-AX43730		16680	EA
STANISCI-AX43736		17367	EA
STANISCI-AX43742		18105	EA
STANISCI-AX43748		18843	EA
43" Wide Hood			
STANISCI-AX44330		17445	EA
STANISCI-AX44336		18210	EA
STANISCI-AX44342		19029	EA
STANISCI-AX44348		19848	EA
49" Wide Hood			
STANISCI-AX44930		18396	EA
STANISCI-AX44936		19266	EA
STANISCI-AX44942		20163	EA
STANISCI-AX44948		21060	EA

Available in *Cherry, Paint Grade, Maple, White Oak, Knotty Alder, Hickory and Rift White Oak.
*Clear Species will be used for wall hoods when ordering a rustic species for cabinets. **Not available in Birch or Beech.**

STANISCI HOOD VENTILATORS

STANDARD FULL STAINLESS VENTILATOR - 360 CFM



5 Watt LED Lighting
Two speed fan control
Large easy to clean aluminum mesh filters
Large capture area
Single 360 CFM Air Ring Fan
Sizes to fit 30" through 36" Stanisci Hoods
7" Ducting recommended
Motor will be mounted inside the hood

STANDARD 360 CFM BLOWER - INCLUDES LINER			
STANISCI-SL36030		5310	EA
STANISCI-SL36036		5538	EA

STANDARD LINER - 360 CFM

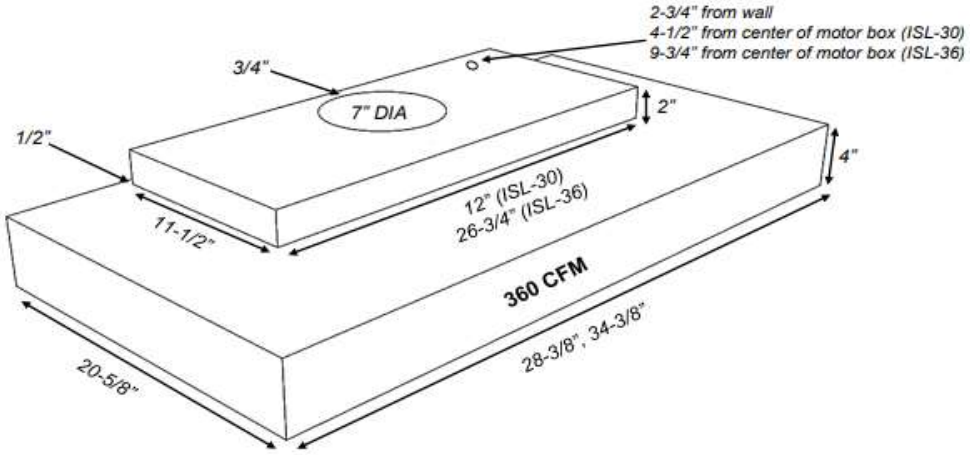

PREMIUM FULL STAINLESS VENTILATOR - 635 CFM



Dimmer controlled 5 Watt LED lighting
Variable speed fan control
Large easy to clean aluminum mesh filters
Large capture area
635 CFM
Sizes to fit 36" through 42" Stanisci Hoods
Heat controlled automatic turn on at 130 degrees
Motor will be mounted inside the hood
7" Ducting is recommended

PREMIUM 635 CFM BLOWER - INCLUDES LINER			
STANISCI-PL63536		8268	EA
STANISCI-PL63542		8634	EA

PREMIUM LINER - 635 CFM

Duct is offset 4 3/8" left. One or more 7" adjustable elbows (not provided) may be needed to exit center of the hood.

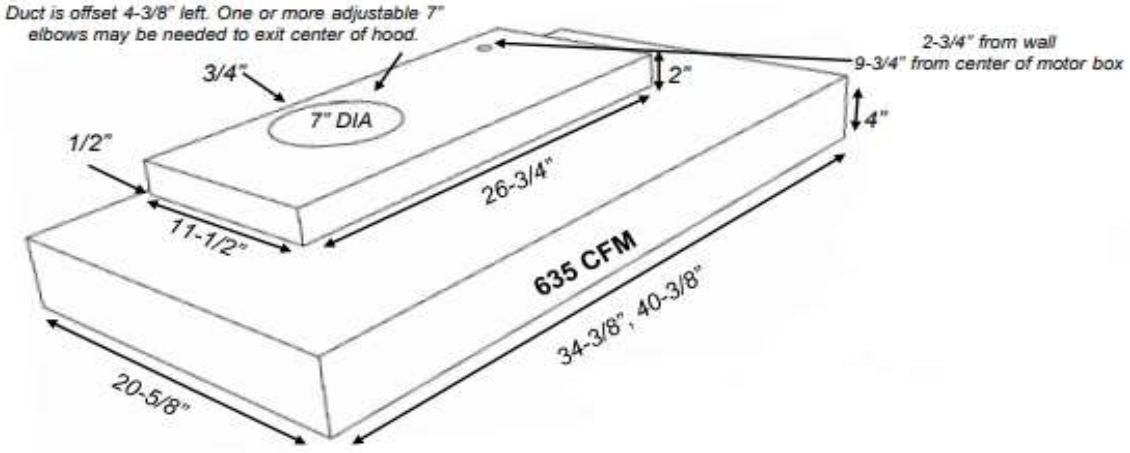

Please note, we are not liable or responsible for determining the correct ventilation for each hood.

STANISCI HOOD VENTILATORS

PREMIUM FULL STAINLESS VENTILATOR - 990 CFM



Dimmer controlled 5 Watt LED lighting
Variable speed fan control
Large easy to clean aluminum mesh filters
Large capture area - 990 CFM
Sizes to fit 36" through 48" Stanisci Hoods
Heat controlled automatic turn on at 130 degrees
Motor will be mounted inside the hood
10" Ducting recommended

PREMIUM 990 CFM BLOWER - INCLUDES LINER			
STANISCI-PL99036		9654	EA
STANISCI-PL99042		9942	EA
STANISCI-PL99048		10326	EA

PREMIUM LINER - 990 CFM

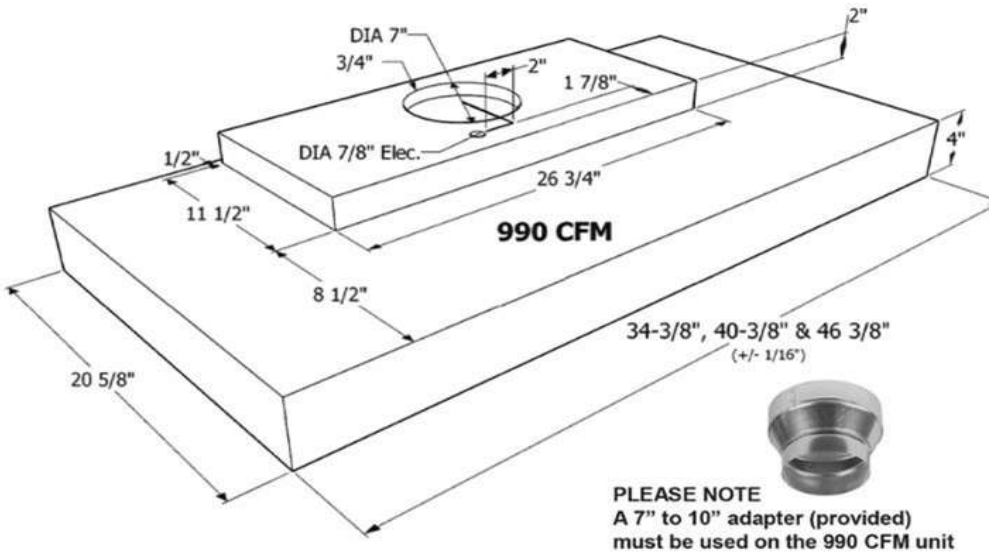

PLEASE NOTE
A 7" to 10" adapter (provided)
must be used on the 990 CFM unit

PROFESSIONAL STAINLESS MESH LINER/VENTILATORS

Only for Stanisci Hoods

Dimmer controlled LED Lighting
Variable speed fan control
Internal blowers
Multiple blower combinations available

Sizes to fit 30" through 60"
decorative range hoods

Large dishwasher safe perforated
stainless steel mesh inserts



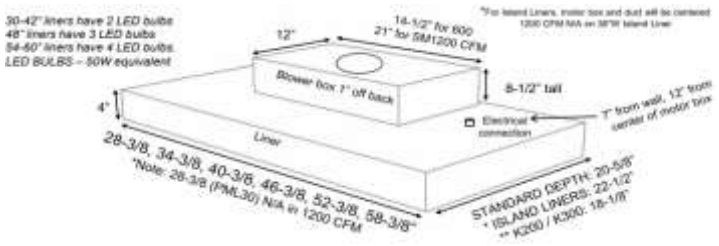

INTERNAL BLOWERS			
MOTOR WILL BE MOUNTED INSIDE THE HOOD			
STANDARD RANGE/SMALL COMMERCIAL W/O GRILLE-EX QUIET			
STANISCI-600S-30		9852	EA
STANISCI-600S-36		10113	EA
STANISCI-600S-42		10392	EA
STANISCI-600S-48		10761	EA
STANISCI-600S-54		11205	EA
STANISCI-600S-60		11574	EA

600S COMES WITH OPTIONAL WIRE HARNESS
TO REDUCE MAX CFM TO 300.

COMMERCIAL RANGE UP TO 48" W/O GRILLE-EX QUIET			
STANISCI-12S-36		12795	EA
STANISCI-12S-42		13080	EA
STANISCI-12S-48		13443	EA
STANISCI-12S-54		13896	EA
STANISCI-12S-60		14259	EA

CHARCOAL MESH FILTER SET THE PML BECOMES RECIRCULATING WHEN CHARCOAL FILTERS REPLACE THE STANDARD FILTERS. ORIGINAL ONES COME OUT, CHARCOAL GOES IN.			
PML-CHARFILTER30	STANISCI-600S-30	1900	EA
PML-CHARFILTER36	STANISCI-600S-36 & STANISCI-12S-36	1900	EA
PML-CHARFILTER42	STANISCI-600S-42 & STANISCI-12S-42	1900	EA
PML-CHARFILTER48	STANISCI-600S-48 & STANISCI-12S-48	1900	EA
PML-CHARFILTER54	STANISCI-600S-54 & STANISCI-12S-54	1900	EA
PML-CHARFILTER60	STANISCI-600S-60 & STANISCI-12S-60	1900	EA

Please note, we are not liable or responsible for determining the correct ventilation for each hood.

STANISCI HOOD VENTILATORS

PROFESSIONAL STAINLESS BAFFLE LINER/VENTILATORS
Only for Stanisci Hoods

Dimmer controlled LED Lighting
Variable speed fan control
Internal blowers
Multiple blower combinations available

Sizes to fit 30" through 60" decorative range hoods

Large dishwasher safe perforated stainless steel baffle inserts



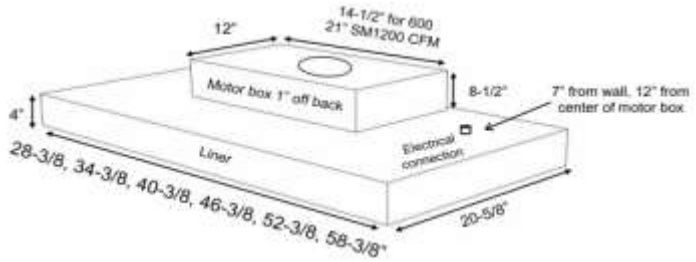

INTERNAL BLOWERS			
MOTOR WILL BE MOUNTED INSIDE THE HOOD			
STANDARD RANGE/SMALL COMMERCIAL W/O GRILLE-EX QUIET			
STANISCI-BL60030		12852	EA
STANISCI-BL60036		13188	EA
STANISCI-BL60042		13545	EA
STANISCI-BL60048		13788	EA
STANISCI-BL60054		14220	EA
STANISCI-BL60060		14385	EA
BL600 COMES WITH OPTIONAL WIRE HARNESS TO REDUCE MAX CFM TO 300.			
COMMERCIAL RANGE UP TO 48" W/O GRILLE-EX QUIET			
STANISCI-BL12-36		15528	EA
STANISCI-BL12-42		16998	EA
STANISCI-BL12-48		17238	EA
STANISCI-BL12-54		17688	EA
STANISCI-BL12-60		17868	EA
CHARCOAL BAFFLE PAD			
THE PBL BECOMES RECIRCULATING WHEN CHARCOAL PADS ARE CLIPPED ON TOP OF (INSIDE) THE BAFFLE FILTERS. ORIGINAL BAFFLE FILTERS STAY IN.			
PBL-CHARPAD30	STANISCI-BL60030	600	EA
PBL-CHARPAD36	STANISCI-BL60036 & STANISCI-BL12-36	600	EA
PBL-CHARPAD42	STANISCI-BL60042 & STANISCI-BL12-42	600	EA
PBL-CHARPAD48	STANISCI-BL60048 & STANISCI-BL12-48	600	EA
PBL-CHARPAD54	STANISCI-BL60054 & STANISCI-BL12-54	600	EA
PBL-CHARPAD60	STANISCI-BL60060 & STANISCI-BL12-60	600	EA

Please note, we are not liable or responsible for determining the correct ventilation for each hood.

NOTES OR ADDITIONS

Base Dimensions

Standard Base with One Drawer
B9 thru B39-2B

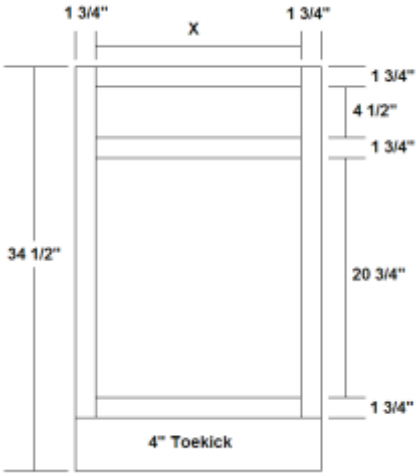

Opening Width Calculation
Cabinet Width - 3.5" = X

Standard Base with Two Drawers & Two Butt Doors
B42-2B & B45-2B

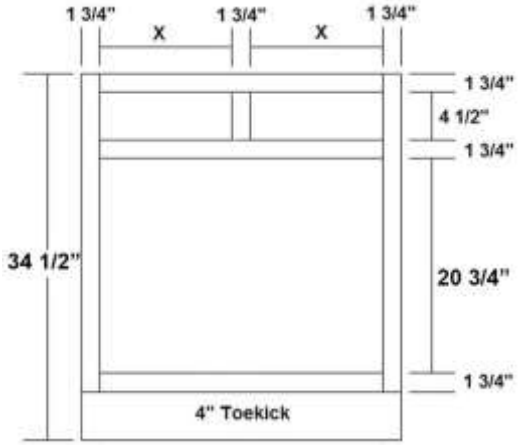

Opening Width Calculation
Cabinet Width - 5.25" / 2 = X

Standard Base with 2 Drawers and 4 Butt Doors B48-4B and B-48 with 2 Doors

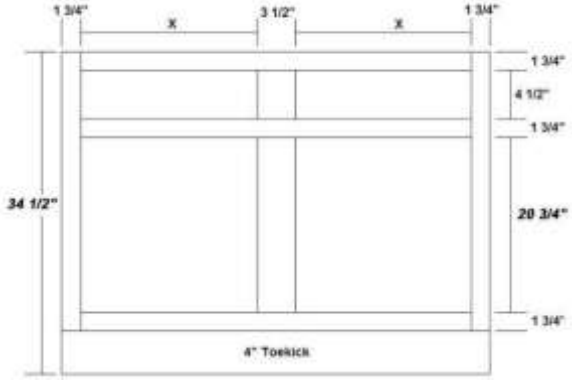

Opening Width Calculation
Cabinet Width - 7" / 2 = X

Standard Base with 3 Drawers and 3 Doors

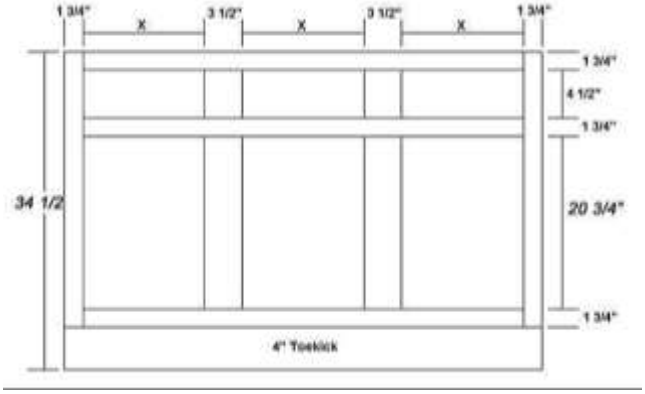

Opening Width Calculation
Cabinet Width - 10.5" / 3 = X

Inverted Sink Base with One Drawer

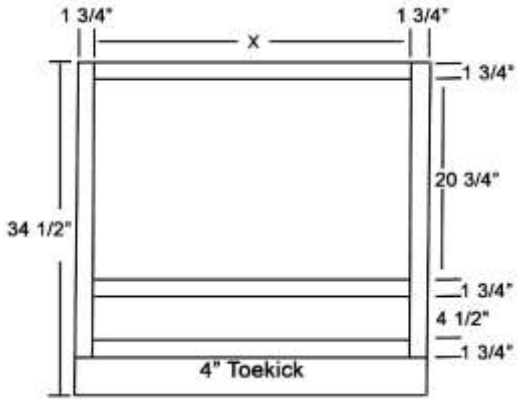

Opening Width Calculation
Cabinet Width - 3.5" = X

Inverted Sink Base with Two Drawers

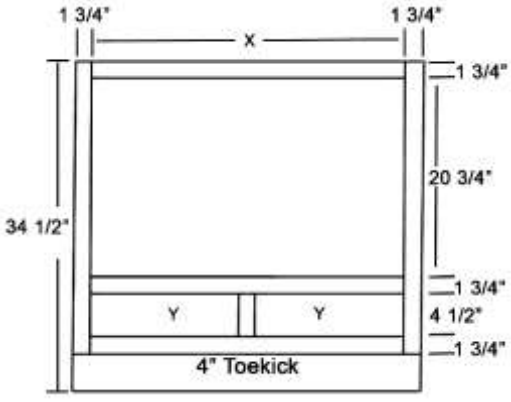

Opening Width Calculation
Cabinet Width - 3.5" = X
Drawer Width - 5.25 /2=Y

TOE KICK IS RECESSED BACK 3"

Base Dimensions

Three Drawer Base

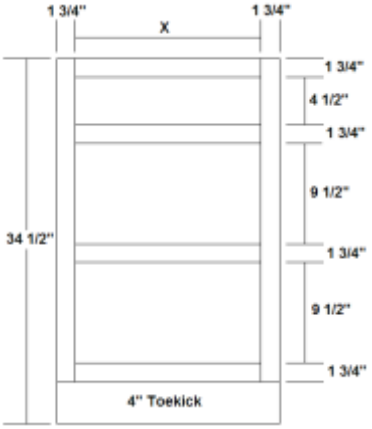

Opening Width Calculation
Cabinet Width - 3.5" = X

Four Drawer Base

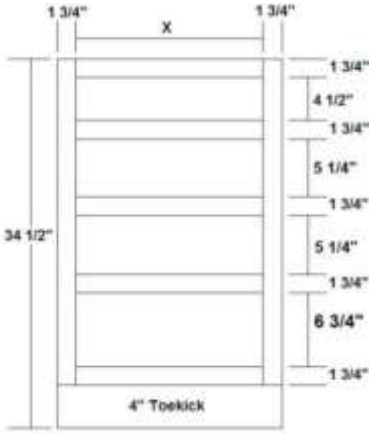

Opening Width Calculation
Cabinet Width - 3.5" = X

Four Drawer Base with Split Top Drawer

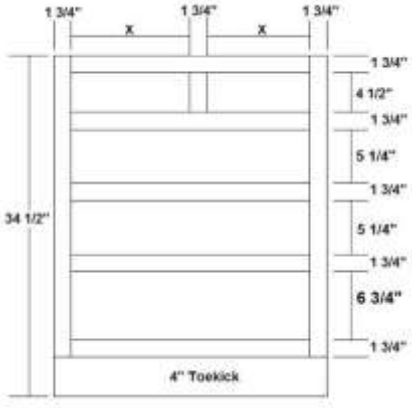

Opening Width Calculation
Cabinet Width: - 5.25" / 2 = X

Three Drawer Base with Split Top Drawer

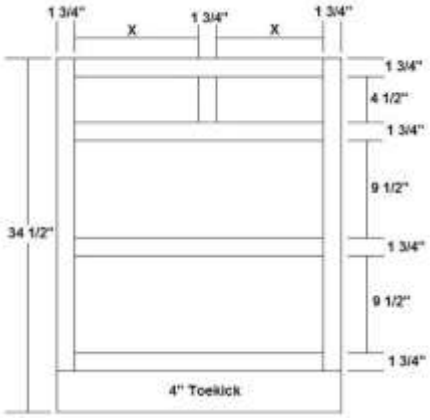

Opening Width Calculation
Cabinet Width: - 5.25" / 2 = X

Three Drawer Corner Base W/90 Degree Drawers

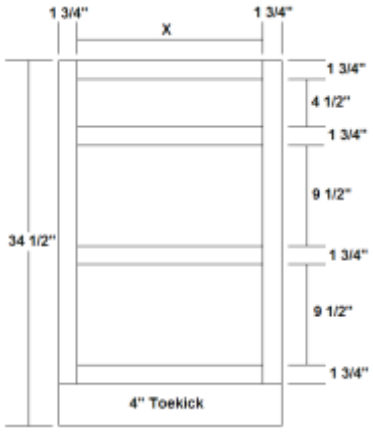

Opening Width Calculation
Cabinet Width - 3.5" = X
Requires 36" X 36" Corner Space

Top View of Corner Base W/Drawers

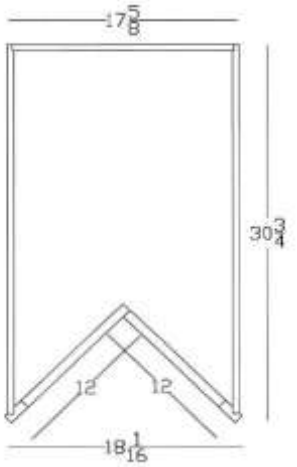

TOE KICK IS RECESSED BACK 3"

Base Dimensions

Base with Full Height Door B9FHD to B45FHD-2B

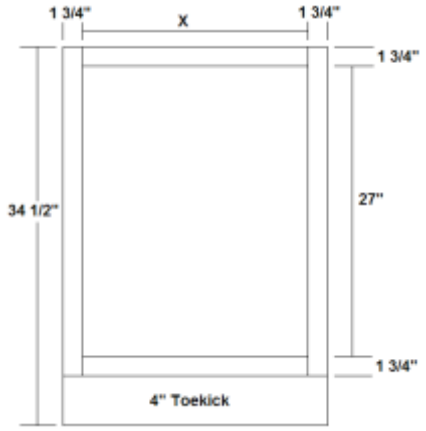

Opening Width Calculation
Cabinet Width - 3.5" = X

Base with Full Height Door B-48FHD and B48FHD-4B to B60FHD-4B

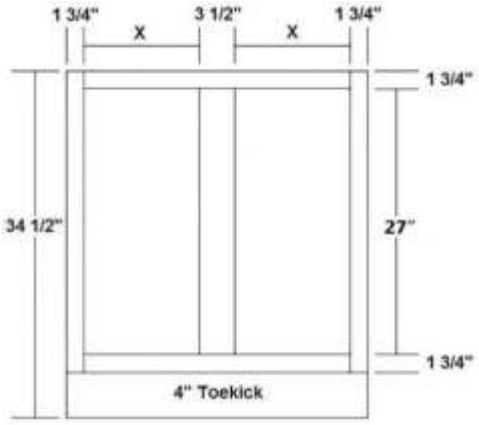

Opening Width Calculation
Cabinet Width - 7" /2 = X

Base with Full Height Door B51FHD to B60FHD

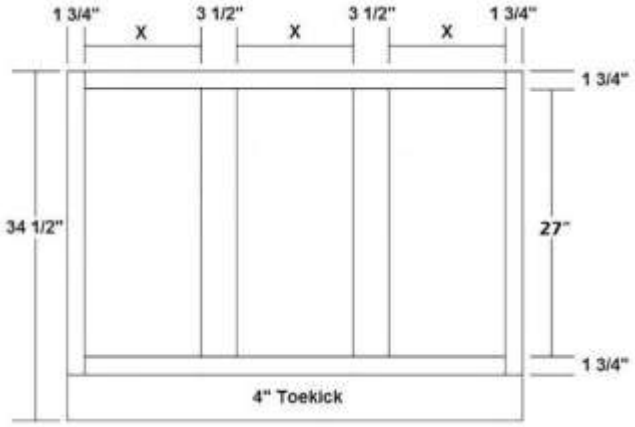

Opening Width Calculation
Cabinet Width - 10.5" /3 = X

Base with Paper Towel Drawer

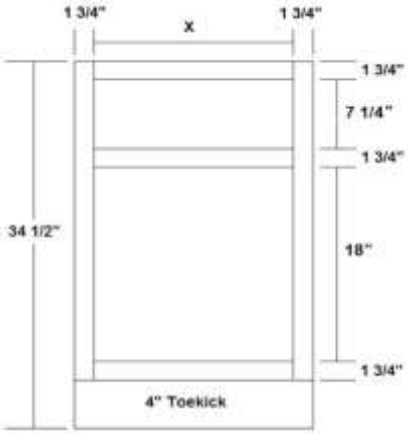

Opening Width Calculation
Cabinet Width - 3.5" = X

Base Wine Rack W/Valance & Doors

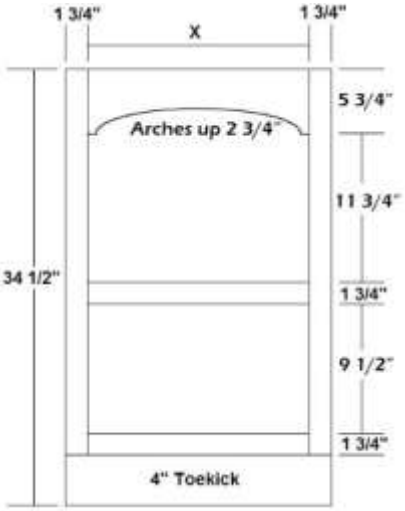

Opening Width Calculation
Cabinet Width - 3.5" = X

Wine Cradle with Butt Doors or Drawers

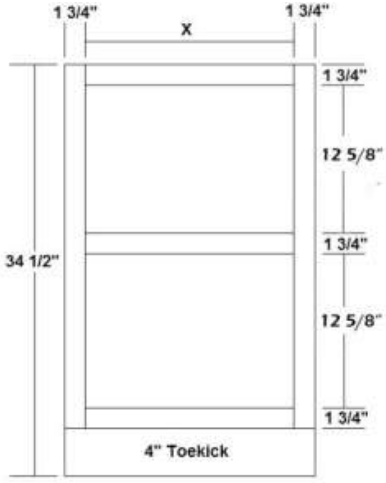

Opening Width Calculation
Cabinet Width - 3.5" = X

TOE KICK IS RECESSED BACK 3"

Base Dimensions

Base Microwave with Drawer

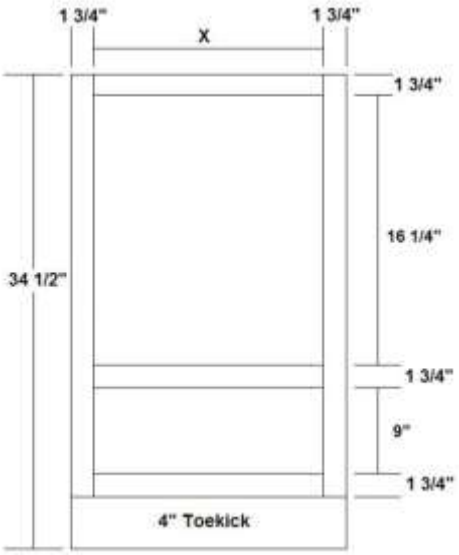

Opening Width Calculation
Cabinet Width - 3.5" = X

Base W/Built in Microwave Drawer and Lower Drawer

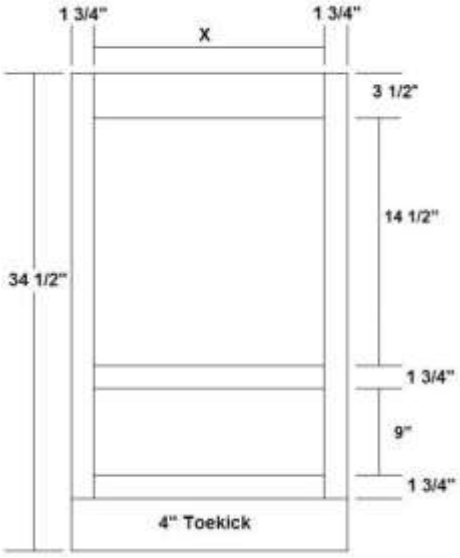

Opening Width Calculation
Cabinet Width - 3.5" = X

Built in Base Microwave with Drawer

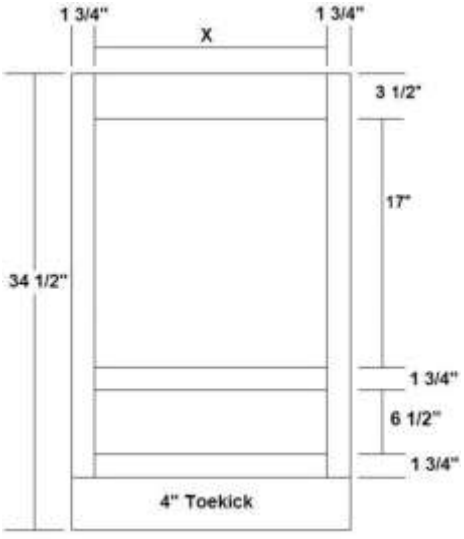

Opening Width Calculation
Cabinet Width - 3.5" = X

Base with Warming DWR and Two Working DWRS

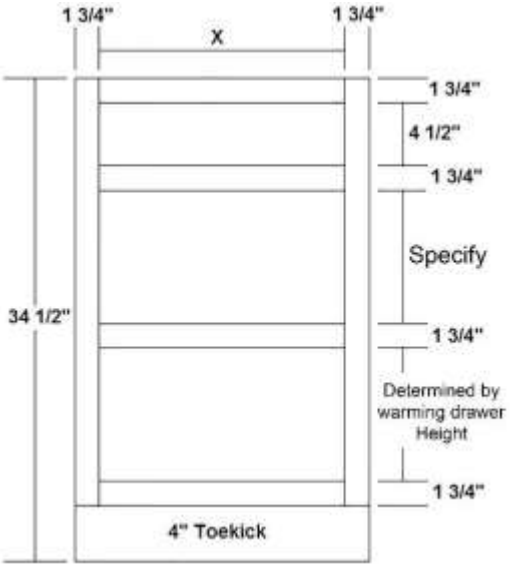

Opening Width Calculation
Cabinet Width - 3.5" = X

TOE KICK IS RECESSED BACK 3"

Base Dimensions

Base Pots and Pans with 2 Drawers

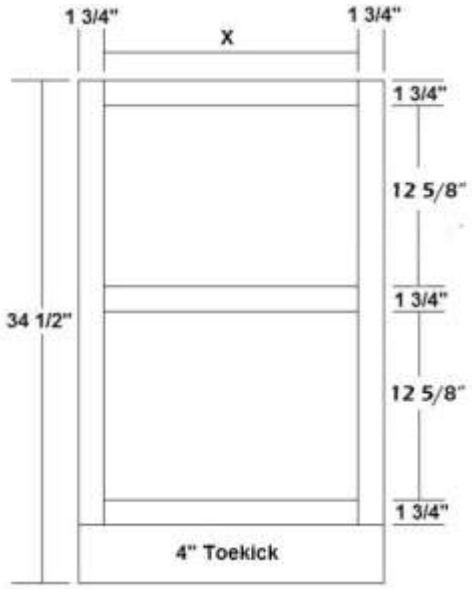

Opening Width Calculation
Cabinet Width - 3.5" = X

Base Pots and Pans with 1 Drawer and Butt Doors

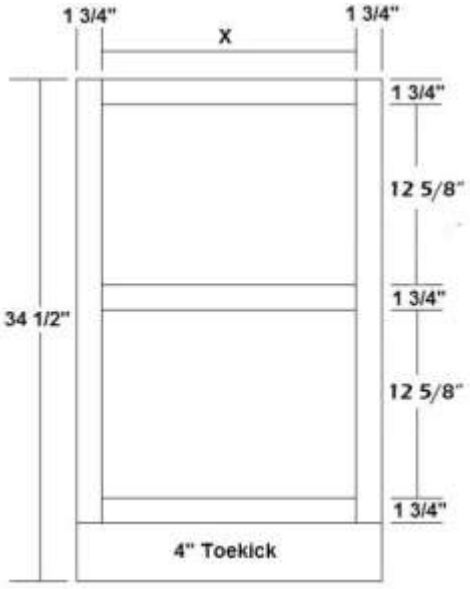

Opening Width Calculation
Cabinet Width - 3.5" = X

Base Pots and Pans with 2 Drawers and 1 Rollout

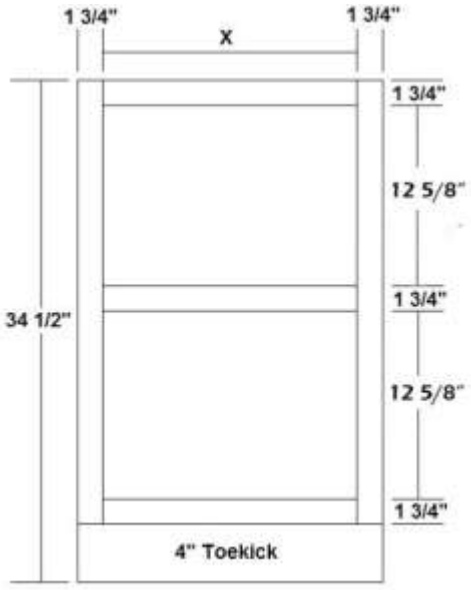

Opening Width Calculation
Cabinet Width - 3.5" = X

Blind Corner Base

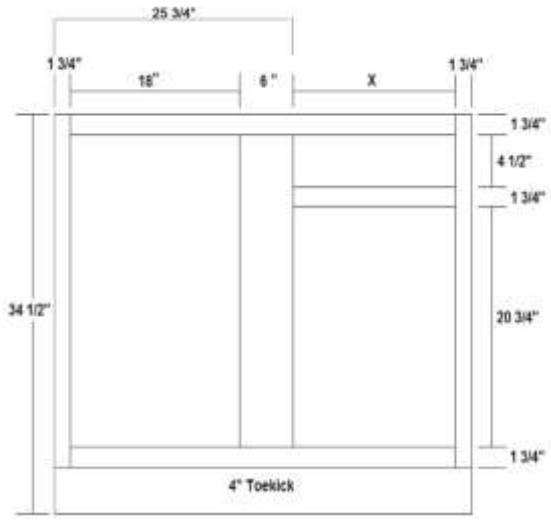

Opening Width Calculation
Cabinet Width - 27.5" = X

TOE KICK IS RECESSED BACK 3"

Base and Corner Base Dimensions

Base Easy Reach

3/4 DEPTH SHELF IN BER33 - BER36.
FULL DEPTH SHELF (WITH NOTCH) ON BER39.

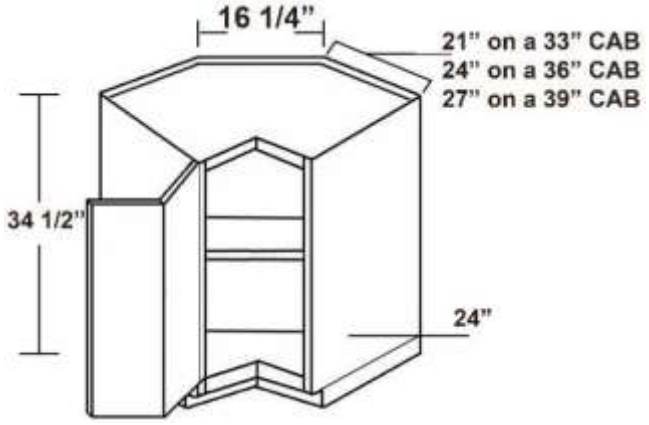

Diagonal Corner Base with Three Doors

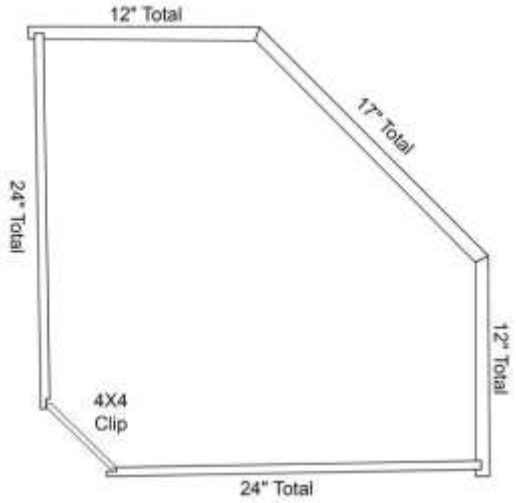

Corner Sink Base

A DOUBLE SINK REQUIRES A 42" CABINET

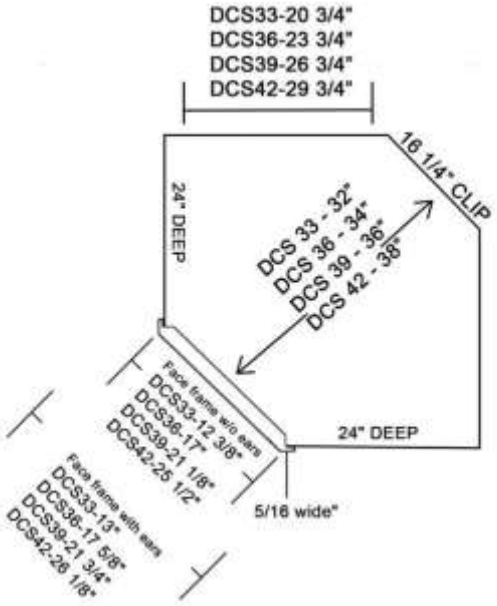

Recessed Front Diagonal Sink Base

ACCOMODATES A 36" SINK

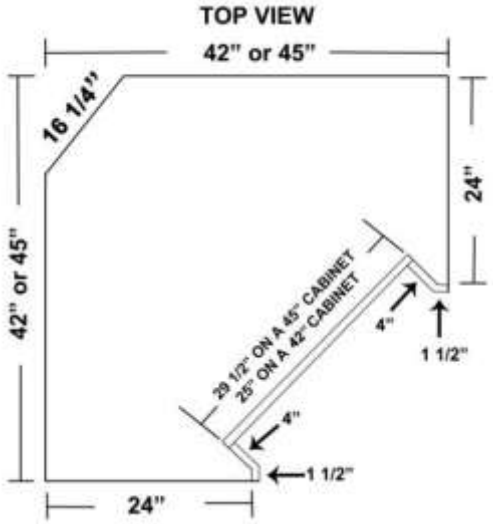

Single Window Seat

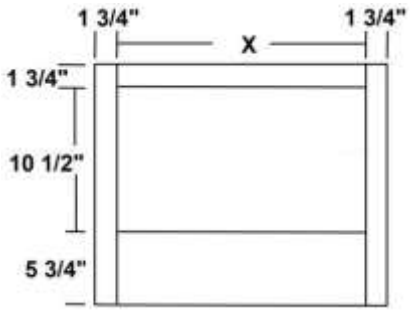

Opening Width Calculation

Cabinet Width - 3.5" = X

Double Window Seat

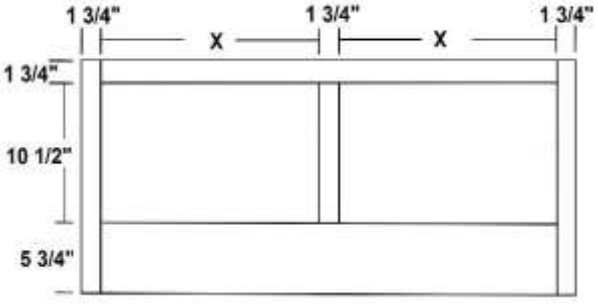

Opening Width Calculation

Cabinet Width: - 5.25" / 2 = X

TOE KICK IS RECESSED BACK 3"

Corner Base Dimensions

Base Diagonal Angle - 12" Deep - Top View

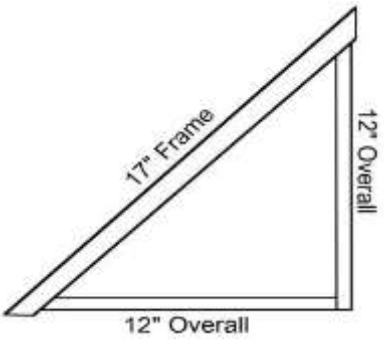

Base Diagonal Angle - 24" Deep - Top View

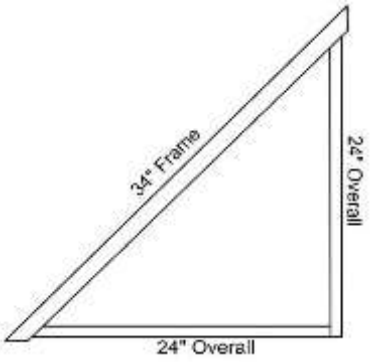

V-Shape Angle Base Top View

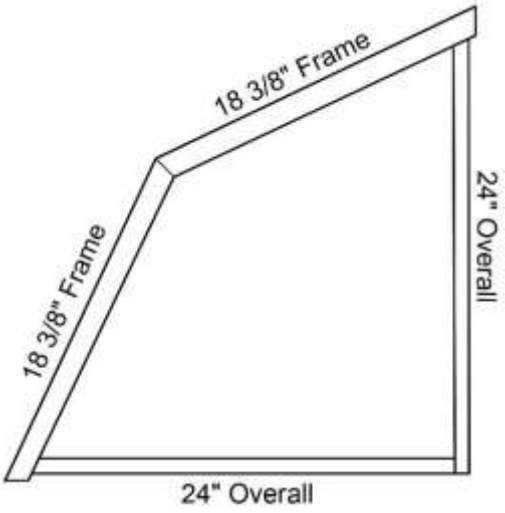

Base Angle Transition Top View

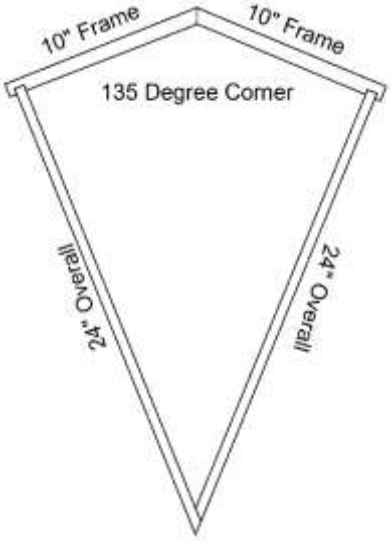

Base Transition Top View

BA12U24U12

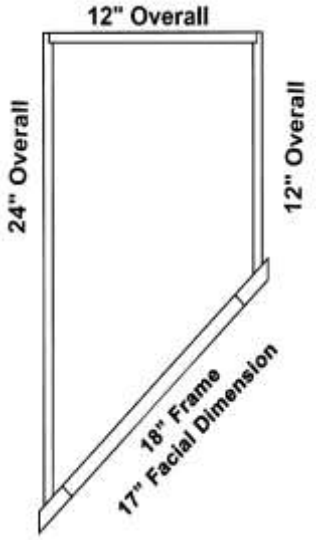

BA15U24U12

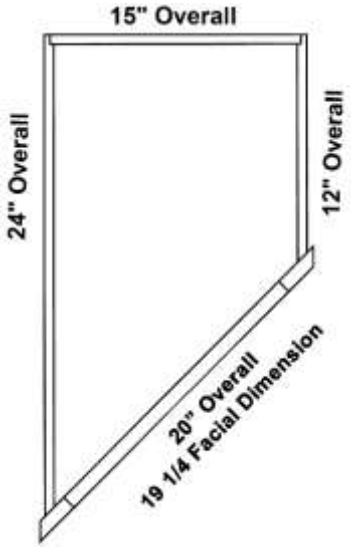

BA15U24U15

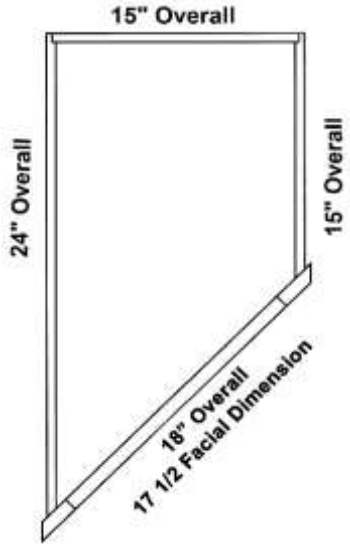

TOE KICK IS RECESSED BACK 3"

WINE CABINETS

Base Wine Cubbie - NTK

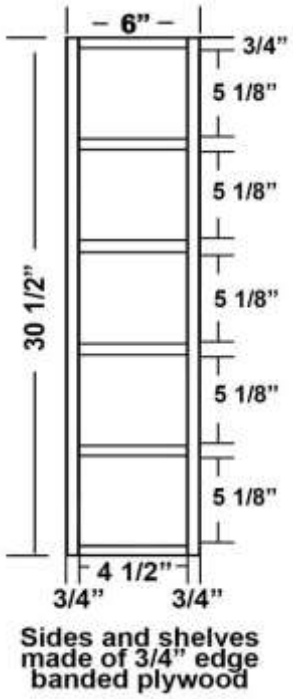

Sides and shelves made of 3/4" edge banded plywood

Base Wine Cubbie - RTK

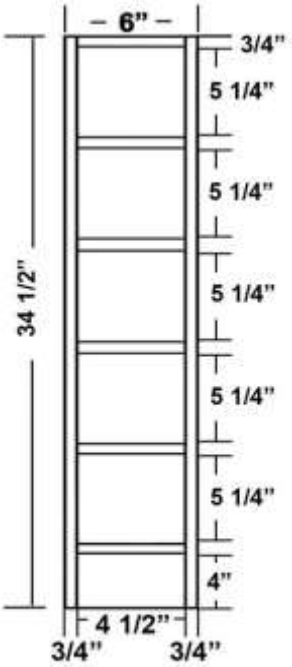

Sides and shelves made of 3/4" edge banded plywood

Base Wine Cubbie - FTK

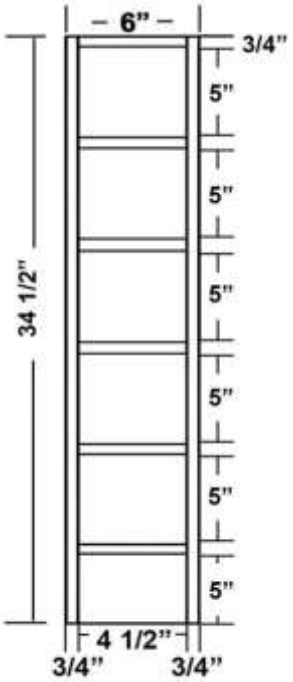

Sides and shelves made of 3/4" edge banded plywood

Base Wine W/Face Frame - NTK

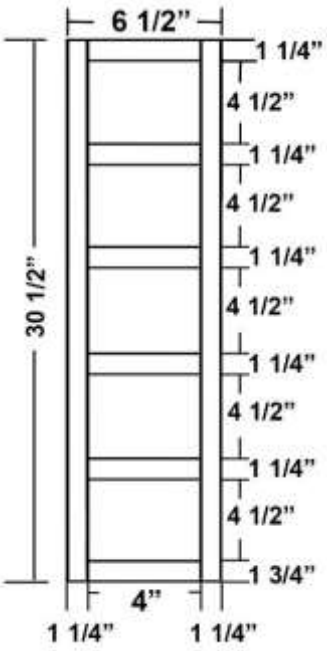

Base Wine W/Face Frame - RTK

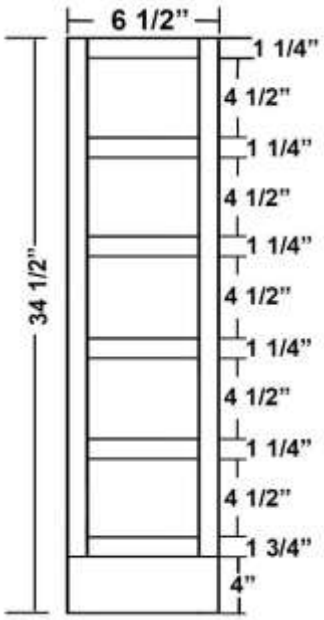

Base Wine W/ Face Frame - FTK

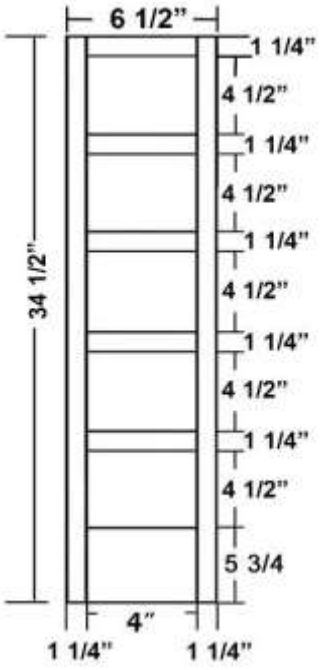

TOE KICK IS RECESSED BACK 3"

A-Bristol, Prairie, Savannah15
B-Plateau, Ridgegate, Summerhill
C-Augusta15, Bedford, Charleston15, Easton, Fairway, Gateway, Harbor, Hastings15, Liberty, Seneca, Vicksburg
D-Regency
E-
F-
G-Aspen15, Centennial15, Madison15, Norfolk15, Orleans, Riverton

SEE PAGE 54 FOR DOORS AVAILABLE IN MOLDED & PRICING

CABINET TYPE

BASES

34 1/2" TALL STANDARD BASE

N/A LESS THAN 9" WIDE
1/2 DEPTH ADJUSTABLE SHELF
B9 THRU B39 HAS A FULL WIDTH DRAWER
B42-2B & B45-2B WILL HAVE BUTT DRAWER FRONTS



B9L



B27-2B

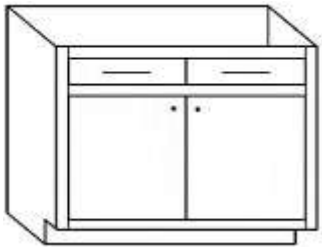

B42-2B

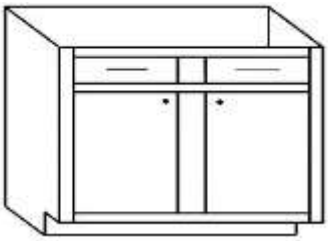

B48

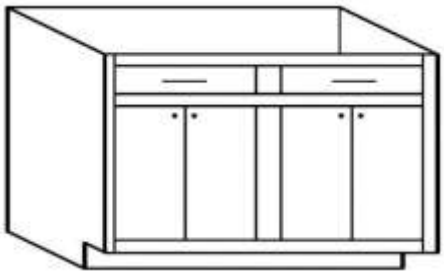

B51-4B

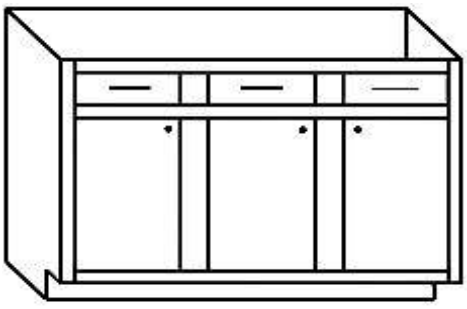

B51L

R OR L INDICATES HINGE SIDE OF MIDDLE DOOR
ON B51" THRU B60" WIDE CABINET WITH THREE DOORS
OUTSIDE DOORS WILL HINGE TO THE OUTSIDE

24" DEEP CABINET	LIST PRICE						
	A	B	C	D	E	F	G
B9L	969	984	1071	1071	1092	1113	1230
B9R	969	984	1071	1071	1092	1113	1230
B12L	1020	1035	1122	1122	1143	1170	1290
B12R	1020	1035	1122	1122	1143	1170	1290
B15L	1065	1083	1179	1179	1200	1230	1353
B15R	1065	1083	1179	1179	1200	1230	1353
B18L	1107	1122	1230	1230	1251	1281	1419
B18R	1107	1122	1230	1230	1251	1281	1419
B21L	1149	1164	1275	1275	1302	1335	1473
B21R	1149	1164	1275	1275	1302	1335	1473
B24L	1188	1203	1332	1332	1353	1389	1536
B24R	1188	1203	1332	1332	1353	1389	1536
B24-2B	1317	1332	1458	1458	1479	1521	1662
B27-2B	1491	1521	1677	1677	1725	1752	1938
B30-2B	1530	1560	1728	1728	1770	1806	1995
B33-2B	1572	1602	1785	1785	1830	1869	2067
B36-2B	1611	1644	1836	1836	1878	1914	2121
B39-2B	1653	1683	1893	1893	1932	1977	2193
B42-2B	2193	2223	2445	2445	2499	2565	2841
B45-2B	2253	2283	2505	2505	2559	2625	2901
B48	2271	2304	2559	2559	2598	2673	2967
B48-4B	2529	2559	2814	2814	2853	2937	3222
B51-4B	3159	3219	3474	3474	3561	3630	4020
B54-4B	3285	3345	3606	3606	3693	3771	4173
B57-4B	3414	3474	3744	3744	3825	3909	4332
B60-4B	3540	3600	3876	3876	3957	4050	4488
3 DOOR CABINET							
B51L	2634	2673	2922	2922	2991	3045	3348
B51R	2634	2673	2922	2922	2991	3045	3348
B54L	2760	2802	3057	3057	3123	3183	3504
B54R	2760	2802	3057	3057	3123	3183	3504
B57L	2889	2928	3189	3189	3255	3324	3663
B57R	2889	2928	3189	3189	3255	3324	3663
B60L	3015	3057	3321	3321	3387	3465	3822
B60R	3015	3057	3321	3321	3387	3465	3822

A-Bristol, Prairie, Savannah15
B-Plateau, Ridgegate, Summerhill
C-Augusta15, Bedford, Charleston15, Easton, Fairway, Gateway, Harbor, Hastings15, Liberty, Seneca, Vicksburg
D-Regency
E-
F-
G-Aspen15, Centennial15, Madison15, Norfolk15, Orleans, Riverton

SEE PAGE 54 FOR DOORS AVAILABLE IN MOLDED & PRICING

CABINET TYPE

BASES

34 1/2" TALL BASE WITH FULL HEIGHT DOORS

TWO ADJUSTABLE FULL DEPTH SHELVES
FULL HEIGHT DOORS - N/A LESS THAN 8" WIDE
DOORS LESS THAN 9" WIDE WILL BE A SLAB DOOR

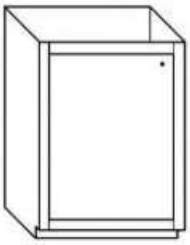

B21FHDL



B24FHD-2B

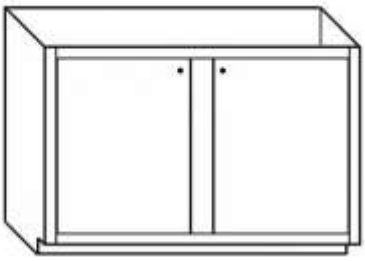

B48FHD

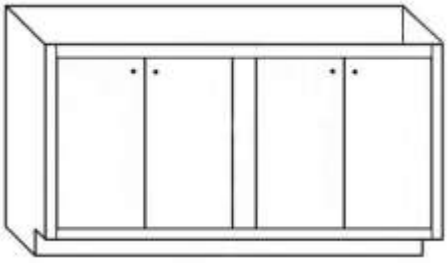

B51FHD-4B

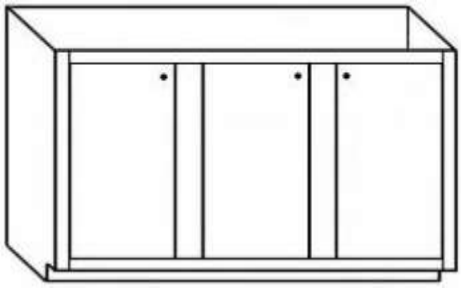

B51FHDL

R OR L INDICATES HINGE SIDE OF MIDDLE DOOR
ON B51" THRU B60" WIDE CABINET WITH THREE DOORS
OUTSIDE DOORS WILL HINGE TO THE OUTSIDE

24" DEEP CABINET	LIST PRICE						
	A	B	C	D	E	F	G
B9FHDL	831	846	933	933	954	975	1092
B9FHDR	831	846	933	933	954	975	1092
B12FHDL	882	897	984	984	1005	1032	1152
B12FHDR	882	897	984	984	1005	1032	1152
B15FHDL	927	945	1041	1041	1062	1092	1215
B15FHDR	927	945	1041	1041	1062	1092	1215
B18FHDL	969	984	1089	1089	1113	1143	1281
B18FHDR	969	984	1089	1089	1113	1143	1281
B21FHDL	1011	1026	1137	1137	1164	1197	1335
B21FHDR	1011	1026	1137	1137	1164	1197	1335
B24FHDL	1050	1065	1191	1191	1215	1254	1398
B24FHDR	1050	1065	1191	1191	1215	1254	1398
B24FHD-2B	1179	1194	1317	1317	1341	1383	1524
B27FHD-2B	1353	1386	1539	1539	1587	1614	1800
B30FHD-2B	1392	1428	1590	1590	1632	1668	1857
B33FHD-2B	1434	1470	1647	1647	1692	1731	1929
B36FHD-2B	1473	1509	1698	1698	1740	1776	1983
B39FHD-2B	1515	1551	1755	1755	1794	1839	2055
B42FHD-2B	1557	1590	1800	1800	1845	1893	2112
B45FHD-2B	1596	1632	1863	1863	1902	1950	2178
B48FHD	1635	1674	1926	1926	1959	2007	2244
B48FHD-4B	2301	2337	2565	2565	2607	2673	2883
B51FHD-4B	2883	2964	3198	3198	3240	3354	3738
B54FHD-4B	3009	3090	3330	3330	3372	3495	3897
B57FHD-4B	3138	3219	3468	3468	3504	3633	4056
B60FHD-4B	3264	3345	3600	3600	3636	3774	4212
3 DOOR CABINET							
B51FHDL	2220	2259	2508	2508	2544	2631	2937
B51FHDR	2220	2259	2508	2508	2544	2631	2937
B54FHDL	2346	2388	2643	2643	2679	2772	3090
B54FHDR	2346	2388	2643	2643	2679	2772	3090
B57FHDL	2475	2514	2775	2775	2814	2910	3249
B57FHDR	2475	2514	2775	2775	2814	2910	3249
B60FHDL	2601	2643	2907	2907	2949	3051	3399
B60FHDR	2601	2643	2907	2907	2949	3051	3399

A-Bristol, Prairie, Savannah15
B-Plateau, Ridgegate, Summerhill
C-Augusta15, Bedford, Charleston15, Easton, Fairway, Gateway, Harbor, Hastings15, Liberty, Seneca, Vicksburg
D-Regency
E-
F-
G-Aspen15, Centennial15, Madison15, Norfolk15, Orleans, Riverton

SEE PAGE 54 FOR DOORS AVAILABLE IN MOLDED & PRICING

CABINET TYPE — BASES

34 1/2" TALL BASE W/PAPER TOWEL DRAWER

1/2 DEPTH ADJUSTABLE SHELF
DRAWER WILL BE DOVETAIL W/ FINISHED INTERIOR IN PAPER TOWEL SECTION
DRAWER FRONT WILL ALWAYS BE SLAB



NO WIDTH MODIFICATIONS

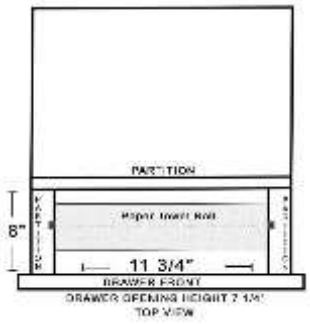

24" DEEP CABINET	LIST PRICE A	B	C	D	E	F	G
B18-PTDL	2919	2934	3042	3042	3063	3093	3231
B18-PTDR	2919	2934	3042	3042	3063	3093	3231
B21-PTDL	2961	2976	3087	3087	3114	3147	3285
B21-PTDR	2961	2976	3087	3087	3114	3147	3285

TRASH UNIT N/A TO INSTALL IN THIS CABINET

34 1/2" TALL BASE WITH WALL DEPTH

TWO ADJUSTABLE FULL DEPTH SHELVES
FULL HEIGHT DOORS - N/A LESS THAN 8" WIDE
DOORS LESS THAN 9" WIDE WILL BE A SLAB DOOR

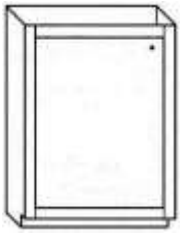

B15U12FHDL



B33U12FHD-2B

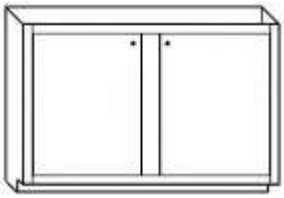

B48U12FHD

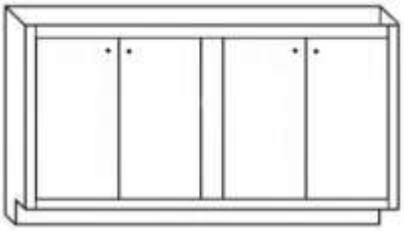

B60U12FHD-4B

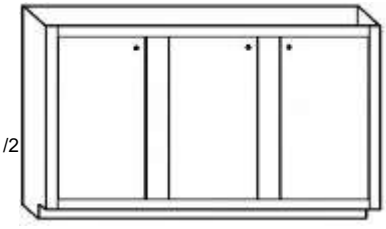

B51U12FHDL

ED AN EXTRA 1 1/2 CE OF HANDLE OR HAR

R OR L INDICATES HINGE SIDE OF MIDDLE DOOR
ON B51" TRHU B60" WIDE CABINET WITH THREE DOORS
OUTSIDE DOORS WILL HINGE TO THE OUTSIDE

12" DEEP CABINET	LIST PRICE A	B	C	D	E	F	G
B12U12FHDL	732	768	834	834	870	882	1002
B12U12FHDR	732	768	834	834	870	882	1002
B15U12FHDL	777	813	891	891	927	942	1068
B15U12FHDR	777	813	891	891	927	942	1068
B18U12FHDL	819	855	942	942	978	993	1131
B18U12FHDR	819	855	942	942	978	993	1131
B21U12FHDL	861	897	987	987	1029	1047	1185
B21U12FHDR	861	897	987	987	1029	1047	1185
B24U12FHDL	900	936	1044	1044	1080	1104	1248
B24U12FHDR	900	936	1044	1044	1080	1104	1248
B24U12FHD-2B	1029	1065	1170	1170	1206	1233	1374
B27U12FHD-2B	1203	1236	1389	1389	1431	1464	1650
B30U12FHD-2B	1242	1278	1440	1440	1476	1518	1707
B33U12FHD-2B	1284	1320	1497	1497	1533	1581	1779
B36U12FHD-2B	1323	1359	1548	1548	1584	1626	1833
B39U12FHD-2B	1365	1395	1605	1605	1641	1689	1905
B42U12FHD-2B	1407	1440	1656	1656	1692	1743	1962
B45U12FHD-2B	1446	1482	1713	1713	1746	1800	2028
B48U12FHD	1485	1524	1770	1770	1800	1857	2094
B48U12FHD-4B	2151	2187	2391	2391	2427	2511	2814
B51U12FHD-4B	2733	2814	3048	3048	3090	3204	3588
B54U12FHD-4B	2859	2940	3180	3180	3222	3345	3747
B57U12FHD-4B	2988	3069	3318	3318	3354	3483	3906
B60U12FHD-4B	3114	3195	3450	3450	3486	3624	4062
3 DOOR CABINET							
B51U12FHDL	2070	2109	2358	2358	2394	2481	2787
B51U12FHDR	2070	2109	2358	2358	2394	2481	2787
B54U12FHDL	2196	2238	2493	2493	2529	2622	2940
B54U12FHDR	2196	2238	2493	2493	2529	2622	2940
B57U12FHDL	2325	2364	2625	2625	2664	2760	3099
B57U12FHDR	2325	2364	2625	2625	2664	2760	3099
B60U12FHDL	2451	2493	2757	2757	2799	2901	3249
B60U12FHDR	2451	2493	2757	2757	2799	2901	3249

A-Bristol, Prairie, Savannah15
B-Plateau, Ridgegate, Summerhill
C-Augusta15, Bedford, Charleston15, Easton, Fairway, Gateway, Harbor, Hastings15, Liberty, Seneca, Vicksburg
D-Regency
E-
F-
G-Aspen15, Centennial15, Madison15, Norfolk15, Orleans, Riverton

SEE PAGE 54 FOR DOORS AVAILABLE IN MOLDED & PRICING

CABINET TYPE — BASES

34 1/2" TALL BASE W/CANISTER PULLOUT & BLUM SOFT CLOSE

BLUM 100# RATED - NO WIDTH MODS
BC9FHD & BC12FHD (3 CANISTERS) / BC15FHD (5 CANISTERS)





24" DEEP CABINET	LIST PRICE						
	A	B	C	D	E	F	G
BC9FHD-CAN	3210	3225	3306	3312	3333	3354	3471
BC12FHD-CAN	3531	3531	3633	3633	3654	3681	3801
BC15FHD-CAN	3882	3897	3984	3984	4005	4038	4161

34 1/2" TALL BASE PULLOUT & BLUM SOFT CLOSE

BLUM 100# RATED - NO WIDTH MODS




24" DEEP CABINET	LIST PRICE						
	A	B	C	D	E	F	G
BC9FHD-SP	2700	2715	2802	2802	2823	2844	2961
BC12FHD-SP	3171	3186	3273	3273	3294	3321	3441
BC15FHD-SP	3456	3474	3570	3570	3591	3621	3744

34 1/2" TALL BASE W/KNIFE PULLOUT & BLUM SOFT CLOSE

FULL HEIGHT DOOR - BLUM 100# RATED - NO WIDTH MODS
BC12FHD-KNIFE INCLUDES TWO CANISTERS AND 1 KNIFE BLOCK INSERT
BC15FHD-KNIFE INCLUDES THREE CANISTERS AND 1 KNIFE BLOCK INSERT




24" DEEP CABINET	LIST PRICE						
	A	B	C	D	E	F	G
BC12FHD-KNIFE	4386	4404	4500	4500	4521	4551	4674
BC15FHD-KNIFE	4536	4554	4650	4650	4671	4701	4824

34 1/2" TALL BASE W/PULLOUT IRONING BOARD

IROING BOARD SECTION 4" TALL - 19 7/8" DEEP
BALL BEARING SLIDE SYSTEM - N/A WITH 5 PC DRAWER FRONTS

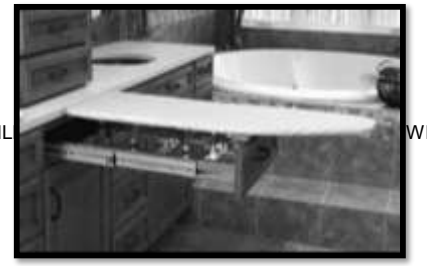

CABINET STIL WHEN INSTALLED. THE CABINET WILL NEED TO BE PULLED AN EXTRA 1 1/2" FROM THE W

BALL BEARING SLIDE SYSTEM
CABINET STILES WILL BE ADJUSTED TO 1 1/2"

24" DEEP CABINET	LIST PRICE						
	A	B	C	D	E	F	G
B18-VIB20CR-L	3069	3084	3192	3192	3213	3243	3435
B18-VIB20CR-R	3069	3084	3192	3192	3213	3243	3435

A-Bristol, Prairie, Savannah15
B-Plateau, Ridgegate, Summerhill
C-Augusta15, Bedford, Charleston15, Easton, Fairway, Gateway, Harbor, Hastings15, Liberty, Seneca, Vicksburg

D-Regency
E-
F-
G-Aspen15, Centennial15, Madison15, Norfolk15, Orleans, Riverton

SEE PAGE 54 FOR DOORS AVAILABLE IN MOLDED & PRICING

CABINET TYPE

BASES

34 1/2" TALL BASE WITH SOFT CLOSE TRASH ROLLOUT

B15 HAS THE 5349 -15DM-1 MODEL - 1 - 35 QT WASTE CONTAINER
B18 HAS THE 5349 -18DM-2 MODEL - 2 - 35 QT WASTE CONTAINERS
STILES WILL BE 1 1/2" TO ACCOMMODATE TRASH UNIT - NO MODIFICATIONS



5349-18DM-2



5349-15DM-1

5349-18DM-2 MODEL - DEPENDING ON CONSTRUCTION AND PULL HARDWARE, A LID ON THE REAR WASTE BIN MAY NOT FULLY FUNCTION

INCLUDES FLOOR INSTALLED UNDER THE DRAWER
LIDS ARE NOT INCLUDED - SEE ORGANIZERS TAB TO ORDER

24" DEEP CABINET	LIST PRICE						
	A	B	C	D	E	F	G
B15TR-SC	2646	2667	2766	2766	2790	2820	2949
B18TR-SC	2751	2766	2880	2880	2901	2934	3078

34 1/2" TALL BASE WITH SOFT CLOSE TRASH ROLLOUT

BC15 HAS 1 34 QT CONTAINER & 1 BIN - BC18 & BC21 HAVE TWO 34 QT CONTAINERS
BC24WTR HAS TWO 34 QT CONTAINERS & 3 BINS (1 WITH A LID)
BC15FHD HAS ONE 50 QT CONTAINER & 1 BIN
BC18FHD & BC21FHD HAVE TWO 50 QT CONTAINERS (NO LIDS)



BC18WTR-SC



BC24WTR INCLUDES 3 STEEL BINS AND 1 STEEL BIN LID



BC18FHDWTR-SC



BC15'S INCLUDE 1 STEEL BIN

STANDARD W/DRAWER INCLUDES DRAWER FLOOR
LIDS ARE AVAILABLE IN 50 QT - SEE ORGANIZERS TAB TO ORDER
BC24WTR-SC STILES WILL BE 1 1/2" TO ACCOMMODATE TRASH UNIT

24" DEEP CABINET	LIST PRICE						
	A	B	C	D	E	F	G
STANDARD W/DRAWER							
BC15WTR-SC	2949	2967	3063	3063	3084	3114	3237
BC18WTR-SC	3081	3096	3204	3204	3225	3255	3393
BC21WTR-SC	3213	3225	3339	3339	3366	3399	3537
BC24WTR-SC	3462	3477	3606	3606	3627	3663	3810
FULL HEIGHT DOOR							
BC15FHDWTR-SC	3216	3234	3330	3330	3351	3381	3504
BC18FHDWTR-SC	3483	3498	3603	3603	3627	3657	3795
BC21FHDWTR-SC	3675	3690	3801	3801	3828	3861	3999

E AL OR HARDWARE, THEN TO ALLOW THE SHELVES TO TRAVEL. (MINIMUM PULL

A-Bristol, Prairie, Savannah15
B-Plateau, Ridgegate, Summerhill
C-Augusta15, Bedford, Charleston15, Easton, Fairway, Gateway, Harbor, Hastings15, Liberty, Seneca, Vicksburg
D-Regency
E-
F-
G-Aspen15, Centennial15, Madison15, Norfolk15, Orleans, Riverton

SEE PAGE 54 FOR DOORS AVAILABLE IN MOLDED & PRICING

CABINET TYPE

BASES

34 1/2" TALL BASE W/TRAY DIVIDER

FULL HEIGHT DOOR - NO SHELF - N/A LESS THAN 9" WIDE



B9MTDL



B9WTDL

24" DEEP CABINET	LIST PRICE						
	A	B	C	D	E	F	G
ONE CHROME DIVIDER							
B9MTDL	918	924	1011	1011	1032	1059	1182
B9MTDR	918	924	1011	1011	1032	1059	1182
B12MTDL	996	1005	1101	1101	1122	1155	1287
B12MTDR	996	1005	1101	1101	1122	1155	1287
ONE WOOD DIVIDER							
B9WTDL	1191	1230	1278	1278	1299	1335	1449
B9WTDR	1191	1230	1278	1278	1299	1335	1449
B12WTDL	1272	1308	1359	1359	1380	1419	1530
B12WTDR	1272	1308	1359	1359	1380	1419	1530

18" TALL WINDOW SEAT

ONE WIDE DRAWER ON BD24-BD36

TWO BUTT DRAWERS ON BD39-BD48

WOOD TOPS MAY BE ORDERED ON PAGE 375

5 3/4" FLUSH TOE KICK - WOOD TOP NOT INCLUDED

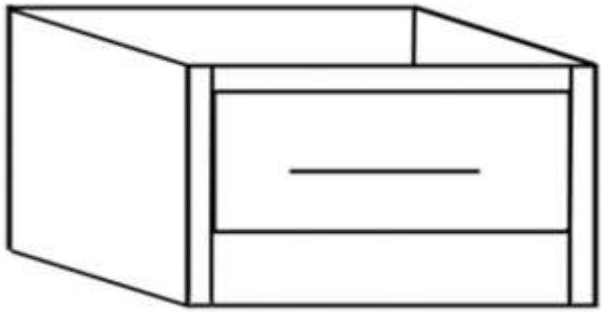

BWS27-1U24

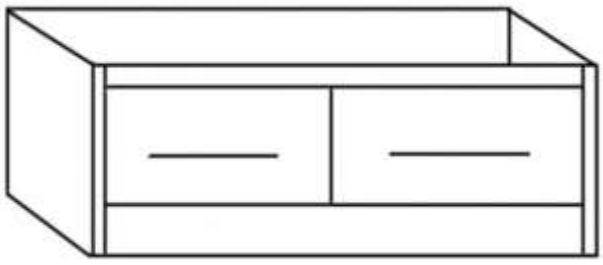

BWS39-2U18

CABINET STILES WILL BE ADJUSTED TO 1 1/2" WHEN INSTALLED. THE CABINET WILL NEED TO BE PULLED AN EXTRA 1 1/2" FROM THE W.

5 3/4" FLUSH TOE KICK - WOOD TOP NOT INCLUDED

IF RECESSED TOE KICK IS DESIRED SEE PAGE 356

REDUCING DEPTH COULD CAUSE THE DRAWERS TO TIP-OUT WHEN EMPTY.

18" DEEP CABINET	LIST PRICE						
	A	B	C	D	E	F	G
SINGLE SEAT							
BWS24-1U18	954	954	954	954	954	954	954
BWS27-1U18	1056	1056	1056	1056	1056	1056	1056
BWS30-1U18	1077	1077	1077	1077	1077	1077	1077
BWS33-1U18	1098	1098	1098	1098	1098	1098	1098
BWS36-1U18	1119	1119	1119	1119	1119	1119	1119
DOUBLE SEAT							
BWS39-2U18	1581	1581	1581	1581	1581	1581	1581
BWS42-2U18	1602	1602	1602	1602	1602	1602	1602
BWS45-2U18	1623	1623	1623	1623	1623	1623	1623
BWS48-2U18	1641	1641	1641	1641	1641	1641	1641

21" DEEP CABINET	LIST PRICE						
	A	B	C	D	E	F	G
SINGLE SEAT							
BWS24-1U21	954	954	954	954	954	954	954
BWS27-1U21	1056	1056	1056	1056	1056	1056	1056
BWS30-1U21	1077	1077	1077	1077	1077	1077	1077
BWS33-1U21	1098	1098	1098	1098	1098	1098	1098
BWS36-1U21	1119	1119	1119	1119	1119	1119	1119
DOUBLE SEAT							
BWS39-2U21	1581	1581	1581	1581	1581	1581	1581
BWS42-2U21	1602	1602	1602	1602	1602	1602	1602
BWS45-2U21	1623	1623	1623	1623	1623	1623	1623
BWS48-2U21	1641	1641	1641	1641	1641	1641	1641

24" DEEP CABINET	LIST PRICE						
	A	B	C	D	E	F	G
SINGLE SEAT							
BWS24-1U24	954	954	954	954	954	954	954
BWS27-1U24	1056	1056	1056	1056	1056	1056	1056
BWS30-1U24	1077	1077	1077	1077	1077	1077	1077
BWS33-1U24	1098	1098	1098	1098	1098	1098	1098
BWS36-1U24	1119	1119	1119	1119	1119	1119	1119
DOUBLE SEAT							
BWS39-2U24	1581	1581	1581	1581	1581	1581	1581
BWS42-2U24	1602	1602	1602	1602	1602	1602	1602
BWS45-2U24	1623	1623	1623	1623	1623	1623	1623
BWS48-2U24	1641	1641	1641	1641	1641	1641	1641

A-Bristol, Prairie, Savannah15
B-Plateau, Ridgegate, Summerhill
C-Augusta15, Bedford, Charleston15, Easton, Fairway, Gateway, Harbor, Hastings15, Liberty, Seneca, Vicksburg
D-Regency
E-
F-
G-Aspen15, Centennial15, Madison15, Norfolk15, Orleans, Riverton

SEE PAGE 54 FOR DOORS AVAILABLE IN MOLDED & PRICING

CABINET TYPE — BASES

30 1/2" TALL BASE WINE CABINET W/FACE FRAME - NTK

NO HEIGHT MODIFICATIONS AVAILABLE

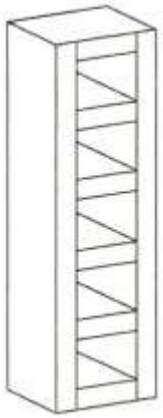

12" DEEP CABINET	LIST PRICE						
	A	B	C	D	E	F	G
BWFF6.5U12-NTK	900	900	900	900	900	900	900

24" DEEP CABINET	LIST PRICE						
	A	B	C	D	E	F	G
BWFF6.5U24-NTK	1050	1050	1050	1050	1050	1050	1050

34 1/2" TALL BASE WINE CABINET W/FACE FRAME - FTK

NO HEIGHT MODIFICATIONS AVAILABLE

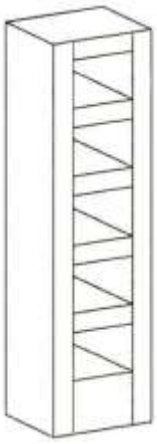

12" DEEP CABINET	LIST PRICE						
	A	B	C	D	E	F	G
BWFF6.5U12-FTK	900	900	900	900	900	900	900

24" DEEP CABINET	LIST PRICE						
	A	B	C	D	E	F	G
BWFF6.5U24-FTK	1050	1050	1050	1050	1050	1050	1050

34 1/2" TALL BASE WINE CABINET W/FACE FRAME - RTK

NO HEIGHT MODIFICATIONS AVAILABLE

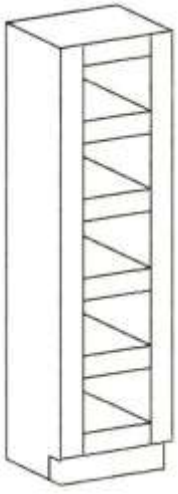

12" DEEP CABINET	LIST PRICE						
	A	B	C	D	E	F	G
BWFF6.5U12-RTK	900	900	900	900	900	900	900

24" DEEP CABINET	LIST PRICE						
	A	B	C	D	E	F	G
BWFF6.5U24-RTK	1050	1050	1050	1050	1050	1050	1050

CABINET STILES WILL BE A 1 1/2" WHEN INSTALLED. THE CABINET WILL NEED TO BE PULLED AN EXTRA 1 1/2" FROM THE W

ALL WINE CUBBIE CABINETS HAVE FINISHED INTERIOR W/5 FIXED CUBBIES
FOR DIMENSION INFORMATION SEE PAGE 164. 1/4" FINISHED ENDS AVAILABLE ON PAGE 279.

A-Bristol, Prairie, Savannah15
B-Plateau, Ridgegate, Summerhill
C-Augusta15, Bedford, Charleston15, Easton, Fairway, Gateway, Harbor, Hastings15, Liberty, Seneca, Vicksburg
D-Regency
E-
F-
G-Aspen15, Centennial15, Madison15, Norfolk15, Orleans, Riverton

SEE PAGE 54 FOR DOORS AVAILABLE IN MOLDED & PRICING

CABINET TYPE — BASES

30 1/2" TALL BASE WINE CUBBIE - NO TOE KICK

NO HEIGHT MODIFICATIONS AVAILABLE



12" DEEP CABINET	LIST PRICE						
	A	B	C	D	E	F	G
BWC6U12-NTK	945	945	945	945	945	945	945

24" DEEP CABINET	LIST PRICE						
	A	B	C	D	E	F	G
BWC6U24-NTK	1095	1095	1095	1095	1095	1095	1095

34 1/2" TALL BASE WINE CUBBIE - FLUSH TOE KICK

NO HEIGHT MODIFICATIONS AVAILABLE



12" DEEP CABINET	LIST PRICE						
	A	B	C	D	E	F	G
BWC6U12-FTK	945	945	945	945	945	945	945

24" DEEP CABINET	LIST PRICE						
	A	B	C	D	E	F	G
BWC6U24-FTK	1095	1095	1095	1095	1095	1095	1095

34 1/2" TALL BASE WINE CUBBIE - RECESSED TOE KICK

NO HEIGHT MODIFICATIONS AVAILABLE



12" DEEP CABINET	LIST PRICE						
	A	B	C	D	E	F	G
BWC6U12-RTK	945	945	945	945	945	945	945

24" DEEP CABINET	LIST PRICE						
	A	B	C	D	E	F	G
BWC6U24-RTK	1095	1095	1095	1095	1095	1095	1095

CABINET STILES WIL l 1/2" WHEN INSTALLED. THE CABINET WILL NEED TO BE PULLED AN EXTRA 1 1/2" FROM THE W

FOR DIMENSION INFORMATION SEE PAGE 164 - RECOMMENDED TO BE PLACED BEWEEN CABINETS
1/4" FINISHED ENDS NOT AVAILABLE - STAINED EXTERIORS WILL HAVE PINHOLES - SEE MOD ON PAGE 359 IF PINHOLES ARE TO BE FILLED IN.

A-Bristol, Prairie, Savannah15
B-Plateau, Ridgegate, Summerhill
C-Augusta15, Bedford, Charleston15, Easton, Fairway, Gateway, Harbor, Hastings15, Liberty, Seneca, Vicksburg
D-Regency
E-
F-
G-Aspen15, Centennial15, Madison15, Norfolk15, Orleans, Riverton

SEE PAGE 54 FOR DOORS AVAILABLE IN MOLDED & PRICING

CABINET TYPE

BASES

34 1/2" TALL BASE WINE RACK

FINISHED INTERIOR STANDARD
IF SKINS ARE NEEDED FOR ENDS SEE PAGE **279**
N/A WITH INCREASED HEIGHT OR WIDTH
N/A IN RIFT WHITE OAK

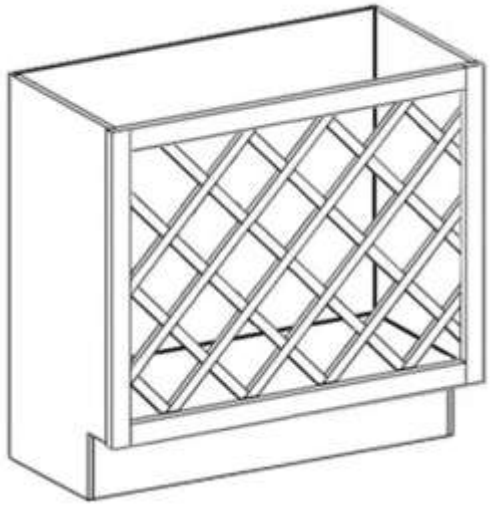

BWR15 HOLDS 12 BOTTLES
BWR18 HOLDS 18 BOTTLES
BWR21 HOLDS 20 BOTTLES
BWR24 HOLDS 24 BOTTLES

12" DEEP CABINET	PRICE LIST						
	A	B	C	D	E	F	G
BWR15	2418	2418	2418	2418	2418	2418	2418
BWR18	2568	2568	2568	2568	2568	2568	2568
BWR21	2718	2718	2718	2718	2718	2718	2718
BWR24	2868	2868	2868	2868	2868	2868	2868

A-Bristol, Prairie, Savannah15
B-Plateau, Ridgegate, Summerhill
C-Augusta15, Bedford, Charleston15, Easton, Fairway, Gateway, Harbor, Hastings15, Liberty, Seneca, Vicksburg
D-Regency
E-
F-
G-Aspen15, Centennial15, Madison15, Norfolk15, Orleans, Riverton

SEE PAGE 54 FOR DOORS AVAILABLE IN MOLDED & PRICING

CABINET TYPE — BASES

34 1/2" TALL WINE CRADLE WITH BUTT DOORS

NO WIDTH MODIFICATIONS
HEIGHT MODIFICATIONS WILL ONLY BE IN LOWER SECTION
FINISHED INTERIOR IN WINE SECTION IS STANDARD
IF SKINS ARE NEEDED FOR ENDS SEE PAGE **279**
NO SHELF IN BOTTOM SECTION
WINE RACK SETS BACK 2" IN THE BASE CABINET

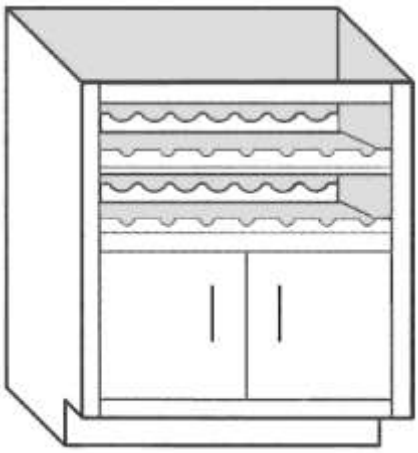

24" DEEP CABINET	PRICE LIST						
	A	B	C	D	E	F	G
BWCRADLE24-2B	3507	3522	3648	3648	3669	3711	3852
BWCRADLE30-2B	3720	3750	3918	3918	3960	3996	4185
BWCRADLE33-2B	3762	3792	3975	3975	4020	4059	4257
BWCRADLE36-2B	3801	3834	4026	4026	4068	4104	4311

34 1/2" TALL WINE CRADLE WITH DRAWERS

NO WIDTH MODIFICATIONS
HEIGHT MODIFICATIONS WILL ONLY BE IN LOWER SECTION
FINISHED INTERIOR IN WINE SECTION IS STANDARD
IF SKINS ARE NEEDED FOR ENDS SEE PAGE **279**
WINE RACK SETS BACK 2" IN THE BASE CABINET

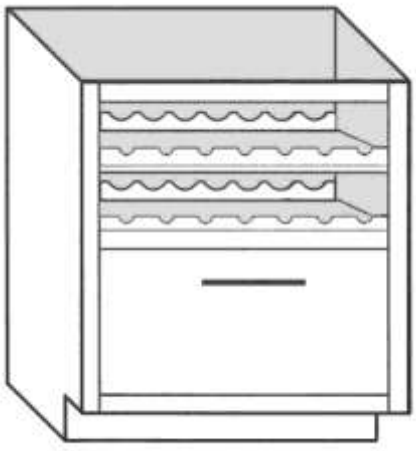

24" DEEP CABINET	PRICE LIST						
	A	B	C	D	E	F	G
BWCRADLE24-DWR	3399	3399	3399	3399	3399	3399	3399
BWCRADLE30-DWR	3648	3648	3648	3648	3648	3648	3648
BWCRADLE33-DWR	3897	3897	3897	3897	3897	3897	3897
BWCRADLE36-DWR	4146	4146	4146	4146	4146	4146	4146

A-Bristol, Prairie, Savannah15
B-Plateau, Ridgegate, Summerhill
C-Augusta15, Bedford, Charleston15, Easton, Fairway, Gateway, Harbor, Hastings15, Liberty, Seneca, Vicksburg
D-Regency
E-
F-
G-Aspen15, Centennial15, Madison15, Norfolk15, Orleans, Riverton

SEE PAGE 54 FOR DOORS AVAILABLE IN MOLDED & PRICING

CABINET TYPE — BASES

34 1/2" TALL CRISS CROSS SINGLE WINE RACK

NO WIDTH OR HEIGHT MODIFICATIONS
FINISHED INTERIOR STANDARD
IF SKINS ARE NEEDED FOR ENDS SEE PANELS TAB
N/A WITH 3" FLUSH TOE

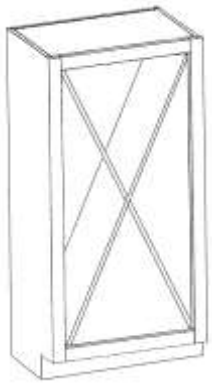

12" DEEP CABINET	PRICE LIST						
	A	B	C	D	E	F	G
BWRCC30U12-1	3300	3300	3300	3300	3300	3300	3300

34 1/2" TALL CRISS CROSS DOUBLE WINE RACK

NO WIDTH OR HEIGHT MODIFICATIONS
FINISHED INTERIOR STANDARD
IF SKINS ARE NEEDED FOR ENDS SEE PANELS TAB
N/A WITH 3" FLUSH TOE

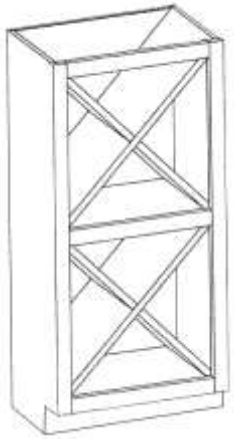

12" DEEP CABINET	PRICE LIST						
	A	B	C	D	E	F	G
BWRCC18U12-2	2400	2400	2400	2400	2400	2400	2400
BWRCC24U12-2	2700	2700	2700	2700	2700	2700	2700

34 1/2" TALL BASE W/5 SPICE DRAWERS

DOVETAIL DRAWER BOXES HAVE 5/8" SIDES AND 1/4" BOTTOM
SOLID WOOD SLAB DRAWER FRONTS OVERLAY FACE OF CABINET
NO WIDTH OR HEIGHT MODIFICATIONS - NO PROFILE ON DRAWER FRONT
RECOMMENDED INSTALLATION IS BETWEEN TWO CABINETS
KNOBS NOT INCLUDED

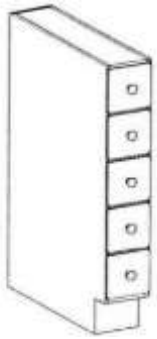

24" DEEP CABINET	LIST PRICE						
	A	B	C	D	E	F	G
B6SD	1275	1275	1275	1275	1275	1275	1275

A-Bristol, Prairie, Savannah15
B-Plateau, Ridgegate, Summerhill
C-Augusta15, Bedford, Charleston15, Easton, Fairway, Gateway, Harbor, Hastings15, Liberty, Seneca, Vicksburg
D-Regency
E-
F-
G-Aspen15, Centennial15, Madison15, Norfolk15, Orleans, Riverton

SEE PAGE 54 FOR DOORS AVAILABLE IN MOLDED & PRICING

CABINET TYPE — BASES

34 1/2" TALL BASE W/2 FULL WIDTH ROLLOUTS

FULL WIDTH DRAWER

FIXED ROLLOUTS N/A

MINIMUM WIDTH OF CABINET FOR ROLLOUTS IS 15"

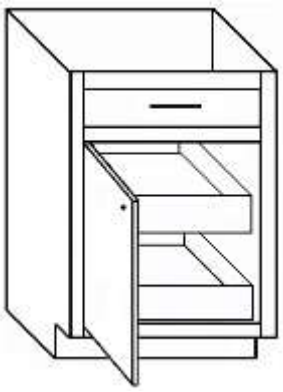

B18-2RL



B24-2R-2B

ROLLOUTS ARE 3 1/2" TALL
5" TALL AVAILABLE - USE CODE **ROSKROLLOUT-5**

DRAWER BOX, ROLLOUTS AND TRACK WILL MATCH PER ORDER.
DRAWER BOX/TRACK SELECTION UPCHARGES WILL APPLY.

TO PROTECT THE DOOR FROM SCRATCHES, BUMPERS WILL BE INSTALLED ON THE ROLLOUT SIDE THAT IS AGAINST THE DOOR. THIS WILL BE ON ALL STANDARD OVERLAY ROLLOUTS AND ON MODIFIED FULL OVERLAY ROLLOUTS WHERE SPACE ALLOWS.

24" DEEP CABINET	LIST PRICE						
	A	B	C	D	E	F	G
B15-2RL	1785	1803	1899	1899	1920	1950	2073
B15-2RR	1785	1803	1899	1899	1920	1950	2073
B18-2RL	1827	1842	1950	1950	1971	2001	2139
B18-2RR	1827	1842	1950	1950	1971	2001	2139
B21-2RL	1869	1884	1995	1995	2022	2055	2193
B21-2RR	1869	1884	1995	1995	2022	2055	2193
B24-2RL	1908	1923	2052	2052	2073	2109	2256
B24-2RR	1908	1923	2052	2052	2073	2109	2256
B24-2R-2B	2037	2052	2178	2178	2199	2241	2382
B27-2R-2B	2211	2241	2397	2397	2445	2472	2658
B30-2R-2B	2250	2280	2448	2448	2490	2526	2715
B33-2R-2B	2292	2322	2505	2505	2550	2589	2787
B36-2R-2B	2331	2364	2556	2556	2598	2634	2841
B39-2R-2B	2373	2403	2613	2613	2652	2697	2913

34 1/2" TALL BASE W/4 ROLLOUTS

FIXED ROLLOUTS N/A

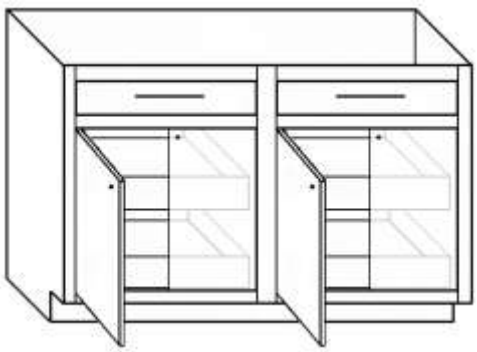

B48-4R-4B

DRAWER BOX, ROLLOUTS AND TRACK WILL MATCH PER ORDER.
DRAWER BOX/TRACK SELECTION UPCHARGES WILL APPLY.

B45-4R & B48-4R WILL BE BUILT THE SAME AS A B45 & B48 (PAGE 165)
(ONE DOOR ON EACH SIDE WITH TWO ROLLOUTS ON EACH SIDE)

ROLLOUTS ARE 3 1/2" TALL
5" TALL AVAILABLE - USE CODE **ROSKROLLOUT-5**

TO PROTECT THE DOOR FROM SCRATCHES, BUMPERS WILL BE INSTALLED ON THE ROLLOUT SIDE THAT IS AGAINST THE DOOR. THIS WILL BE ON ALL STANDARD OVERLAY ROLLOUTS AND ON MODIFIED FULL OVERLAY ROLLOUTS WHERE SPACE ALLOWS.

24" DEEP CABINET	LIST PRICE						
	A	B	C	D	E	F	G
B42-4R-4B	3210	3240	3456	3456	3495	3549	3774
B45-4R-4B	3591	3621	3843	3843	3882	3945	4185
B48-4R-4B	3969	3999	4254	4254	4293	4377	4662
B51-4R-4B	4599	4659	4914	4914	5001	5070	5460
B54-4R-4B	4725	4785	5046	5046	5133	5211	5613
B57-4R-4B	4854	4914	5184	5184	5265	5349	5772
B60-4R-4B	4980	5040	5316	5316	5397	5490	5928
B45-4R	3291	3321	3543	3543	3582	3745	3885
B48-4R	3669	3699	3954	3954	3993	4077	4362

A-Bristol, Prairie, Savannah15
B-Plateau, Ridgegate, Summerhill
C-Augusta15, Bedford, Charleston15, Easton, Fairway, Gateway, Harbor, Hastings15, Liberty, Seneca, Vicksburg
D-Regency
E-
F-
G-Aspen15, Centennial15, Madison15, Norfolk15, Orleans, Riverton

SEE PAGE 54 FOR DOORS AVAILABLE IN MOLDED & PRICING

CABINET TYPE

BASES

34 1/2" TALL BASE W/FULL HEIGHT DOORS AND 4 ROLLOUTS

ROLLOUTS ARE 3 1/2" TALL
5" TALL AVAILABLE - USE CODE **ROSKROLLOUT-5**

FIXED ROLLOUTS N/A

MINIMUM WIDTH OF ROLLOUTS IS 15" - NO MODIFICATIONS

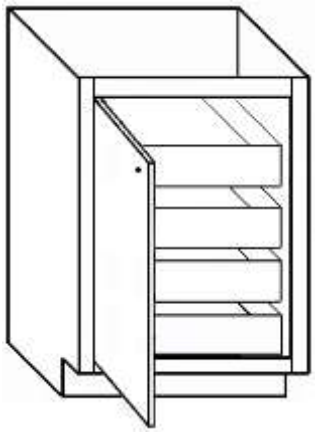

B15FHD-4RL

DRAWER BOX, ROLLOUTS AND TRACK WILL MATCH PER ORDER.
DRAWER BOX/TRACK SELECTION UPCHARGES WILL APPLY.

TO PROTECT THE DOOR FROM SCRATCHES, BUMPERS WILL BE INSTALLED ON THE ROLLOUT SIDE THAT IS AGAINST THE DOOR. THIS WILL BE ON ALL STANDARD OVERLAY ROLLOUTS AND ON MODIFIED FULL OVERLAY ROLLOUTS WHERE SPACE ALLOWS.

24" DEEP CABINET	LIST PRICE						
	A	B	C	D	E	F	G
B15FHD-4RL	2367	2385	2481	2481	2502	2532	2655
B15FHD-4RR	2367	2385	2481	2481	2502	2532	2655
B18FHD-4RL	2409	2424	2529	2529	2553	2583	2721
B18FHD-4RR	2409	2424	2529	2529	2553	2583	2721
B21FHD-4RL	2451	2466	2577	2577	2604	2637	2775
B21FHD-4RR	2451	2466	2577	2577	2604	2637	2775
B24FHD-4RL	2490	2505	2631	2631	2655	2694	2838
B24FHD-4RR	2490	2505	2631	2631	2655	2694	2838
B24FHD-4R-2B	2619	2634	2757	2757	2781	2823	2964

34 1/2" TALL BASE W/BREADBOARD

BREADBOARD WIDTH IS 3 3/4" LESS THAN CABINET WIDTH
1/2 DEPTH ADJUSTABLE SHELF

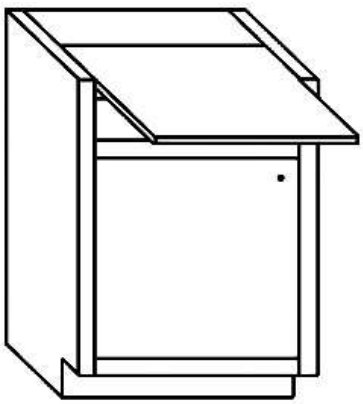

B15BBL

24" DEEP CABINET	LIST PRICE						
	A	B	C	D	E	F	G
B15BBL	1959	1995	2106	2106	2133	2205	2454
B15BBR	1959	1995	2106	2106	2133	2205	2454
B18BBL	2001	2034	2163	2163	2184	2262	2520
B18BBR	2001	2034	2163	2163	2184	2262	2520
B21BBL	2040	2076	2208	2208	2229	2310	2577
B21BBR	2040	2076	2208	2208	2229	2310	2577
B24BBL	2082	2118	2259	2259	2286	2367	2637
B24BBR	2082	2118	2259	2259	2286	2367	2637
B24BB-2B	2208	2244	2388	2388	2412	2499	2766
B27BB-2B	2382	2418	2613	2613	2643	2730	3039

A-Bristol, Prairie, Savannah15
B-Plateau, Ridgegate, Summerhill
C-Augusta15, Bedford, Charleston15, Easton, Fairway, Gateway, Harbor, Hastings15, Liberty, Seneca, Vicksburg
D-Regency
E-
F-
G-Aspen15, Centennial15, Madison15, Norfolk15, Orleans, Riverton

SEE PAGE 54 FOR DOORS AVAILABLE IN MOLDED & PRICING

CABINET TYPE — BASES

34 1/2" TALL BASE BREAD CENTER

CENTERED BREADBOARD 20 1/4" WIDE
2- 4 1/2" DRAWERS ON LEFT & 1- 10 3/4" TALL DRAWER ON RIGHT
BUTT DOORS BELOW

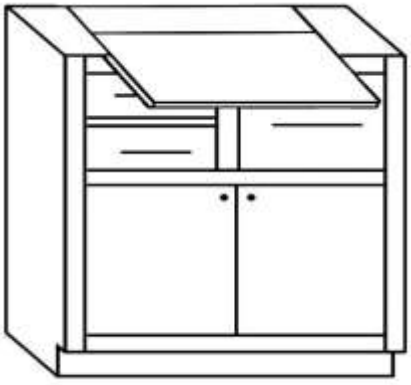

BCC30-2B

24" DEEP CABINET	LIST PRICE						
	A	B	C	D	E	F	G
BCC30-2B	3855	3891	4104	4104	4146	4191	4587
BCC36-2B	3936	3972	4212	4212	4251	4326	4716

34 1/2" TALL BASE w/BREADBOARD CENTERED

20 1/4" BREADBOARD ONLY
1/2 DEPTH ADJUSTABLE SHELF
B30 THRU B39 AND B48 WILL HAVE ONE WIDE DRAWER
B42 & B45 WILL HAVE BUTT DRAWER FRONTS

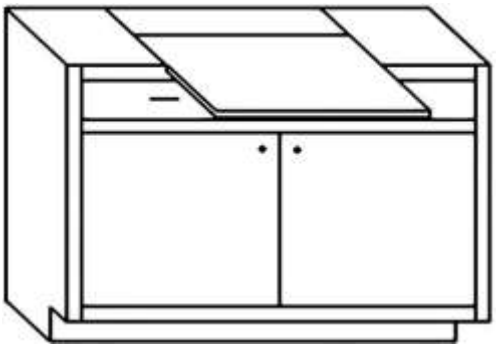

B39BBC-2B

24" DEEP CABINET	LIST PRICE						
	A	B	C	D	E	F	G
B30BBC-2B	2679	2715	2928	2928	2970	3066	3411
B33BBC-2B	2718	2754	2985	2985	3030	3129	3483
B36BBC-2B	2760	2796	3036	3036	3075	3174	3540
B39BBC-2B	2799	2835	3090	3090	3138	3237	3606
B42BBC-2B	2979	3015	3276	3276	3321	3429	3801
B45BBC-2B	3021	3057	3315	3315	3357	3465	3846
B48BBC-4B	3213	3249	3510	3510	3549	3663	4059

A-Bristol, Prairie, Savannah15
B-Plateau, Ridgegate, Summerhill
C-Augusta15, Bedford, Charleston15, Easton, Fairway, Gateway, Harbor, Hastings15, Liberty, Seneca, Vicksburg
D-Regency
E-
F-
G-Aspen15, Centennial15, Madison15, Norfolk15, Orleans, Riverton

SEE PAGE 54 FOR DOORS AVAILABLE IN MOLDED & PRICING

CABINET TYPE — BASES

3 DRAWER BASE W/FULL WIDTH BREADBOARD

BREADBOARD WIDTH IS 3 3/4" LESS THAN CABINET WIDTH

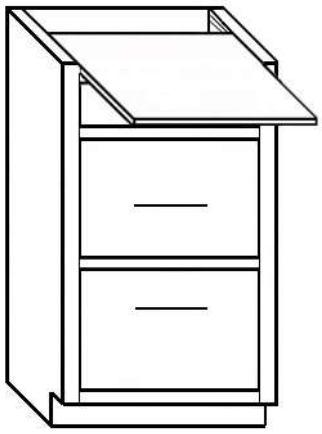

BD27-3BB

24" DEEP CABINET	LIST PRICE						
	A	B	C	D	E	F	G
BD15-3BB	2439	2439	2439	2439	2439	2439	2439
BD18-3BB	2505	2505	2505	2505	2505	2505	2505
BD21-3BB	2565	2565	2565	2565	2565	2565	2565
BD24-3BB	2634	2634	2634	2634	2634	2634	2634
BD27-3BB	2991	2991	2991	2991	2991	2991	2991

4 DRAWER BASE W/FULL WIDTH BREADBOARD

BREADBOARD WIDTH IS 3 3/4" LESS THAN CABINET WIDTH



BD27-4BB

24" DEEP CABINET	LIST PRICE						
	A	B	C	D	E	F	G
BD15-4BB	2658	2658	2658	2658	2658	2658	2658
BD18-4BB	2724	2724	2724	2724	2724	2724	2724
BD21-4BB	2787	2787	2787	2787	2787	2787	2787
BD24-4BB	2862	2862	2862	2862	2862	2862	2862
BD27-4BB	3261	3261	3261	3261	3261	3261	3261

3 DRAWER BASE

N/A OVER 39"

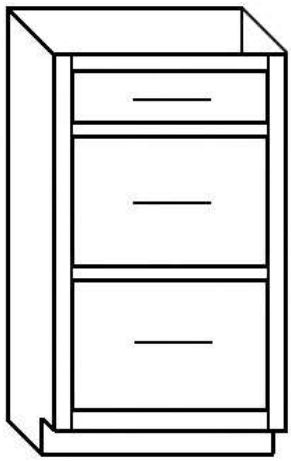

BD36-3

24" DEEP CABINET	LIST PRICE						
	A	B	C	D	E	F	G
BD12-3	1500	1500	1500	1500	1500	1500	1500
BD15-3	1560	1560	1560	1560	1560	1560	1560
BD18-3	1626	1626	1626	1626	1626	1626	1626
BD21-3	1689	1689	1689	1689	1689	1689	1689
BD24-3	1755	1755	1755	1755	1755	1755	1755
BD27-3	2016	2016	2016	2016	2016	2016	2016
BD30-3	2235	2235	2235	2235	2235	2235	2235
BD33-3	2466	2466	2466	2466	2466	2466	2466
BD36-3	2691	2691	2691	2691	2691	2691	2691
BD39-3	2916	2916	2916	2916	2916	2916	2916

A-Bristol, Prairie, Savannah15
B-Plateau, Ridgegate, Summerhill
C-Augusta15, Bedford, Charleston15, Easton, Fairway, Gateway, Harbor, Hastings15, Liberty, Seneca, Vicksburg
D-Regency
E-
F-
G-Aspen15, Centennial15, Madison15, Norfolk15, Orleans, Riverton

SEE PAGE 54 FOR DOORS AVAILABLE IN MOLDED & PRICING

CABINET TYPE — BASES

4 DRAWER BASE

N/A OVER 39"

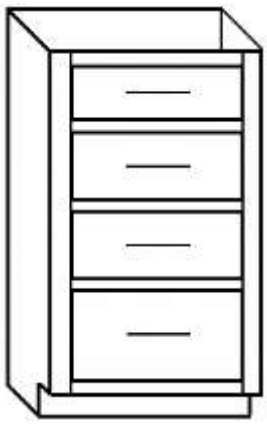

BD36-4

24" DEEP CABINET	LIST PRICE						
	A	B	C	D	E	F	G
BD12-4	1788	1788	1788	1788	1788	1788	1788
BD15-4	1854	1854	1854	1854	1854	1854	1854
BD18-4	1920	1920	1920	1920	1920	1920	1920
BD21-4	1983	1983	1983	1983	1983	1983	1983
BD24-4	2058	2058	2058	2058	2058	2058	2058
BD27-4	2286	2286	2286	2286	2286	2286	2286
BD30-4	2523	2523	2523	2523	2523	2523	2523
BD33-4	2754	2754	2754	2754	2754	2754	2754
BD36-4	2979	2979	2979	2979	2979	2979	2979
BD39-4	3204	3204	3204	3204	3204	3204	3204

DRAWER BASE WITH 2 FULL DWRS AND TWO SMALL DWRS

N/A OVER 39"

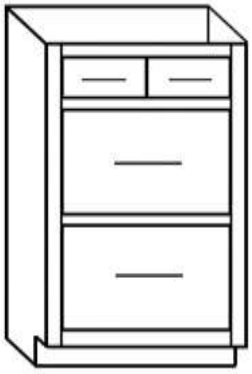

BD36-3TDS

24" DEEP CABINET	LIST PRICE						
	A	B	C	D	E	F	G
BD30-3TDS	3381	3381	3381	3381	3381	3381	3381
BD33-3TDS	3531	3531	3531	3531	3531	3531	3531
BD36-3TDS	3681	3681	3681	3681	3681	3681	3681
BD39-3TDS	3831	3831	3831	3831	3831	3831	3831

DRAWER BASE WITH 3 FULL DWRS AND TWO SMALL DWRS

N/A OVER 39"

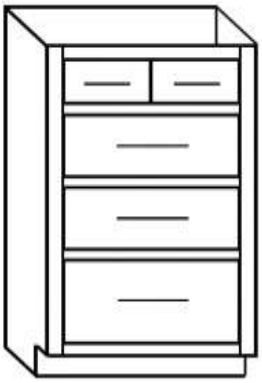

BD36-4TDS

24" DEEP CABINET	LIST PRICE						
	A	B	C	D	E	F	G
BD30-4TDS	3537	3537	3537	3537	3537	3537	3537
BD33-4TDS	3687	3687	3687	3687	3687	3687	3687
BD36-4TDS	3957	3957	3957	3957	3957	3957	3957
BD39-4TDS	4227	4227	4227	4227	4227	4227	4227

A-Bristol, Prairie, Savannah15
B-Plateau, Ridgegate, Summerhill
C-Augusta15, Bedford, Charleston15, Easton, Fairway, Gateway, Harbor, Hastings15, Liberty, Seneca, Vicksburg
D-Regency
E-
F-
G-Aspen15, Centennial15, Madison15, Norfolk15, Orleans, Riverton

SEE PAGE 54 FOR DOORS AVAILABLE IN MOLDED & PRICING

CABINET TYPE — BASES

34 1/2" TALL SINK BASE

BS18 THRU BS39 HAVE ONE WIDE FALSE FRONT
BS42-B & BS45-2B WILL HAVE BUTT DRAWER FRONTS



BS18L



BS24-2B



BS42-2B

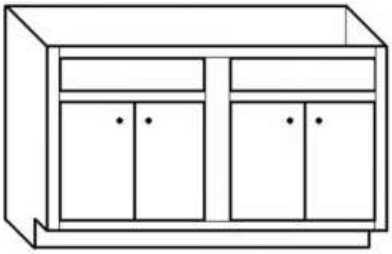

BS48-4B

24" DEEP CABINET	LIST PRICE						
	A	B	C	D	E	F	G
BS18L	831	846	969	969	990	1014	1131
BS18R	831	846	969	969	990	1014	1131
BS21L	858	873	996	996	1014	1041	1167
BS21R	858	873	996	996	1014	1041	1167
BS24L	882	897	1020	1020	1047	1074	1200
BS24R	882	897	1020	1020	1047	1074	1200
BS24-2B	1011	1026	1149	1149	1173	1206	1326
BS27-2B	1122	1158	1302	1302	1347	1362	1521
BS30-2B	1149	1182	1332	1332	1377	1398	1557
BS33-2B	1179	1215	1377	1377	1419	1440	1608
BS36-2B	1203	1239	1413	1413	1455	1479	1653
BS39-2B	1230	1266	1455	1455	1500	1524	1704
BS42-2B	1254	1290	1488	1488	1530	1560	1740
BS45-2B	1284	1320	1530	1530	1572	1602	1791
BS48-4B	1974	2010	2250	2250	2337	2358	2622

34 1/2" TALL INVERTED SINK BASE

FULL WIDTH BOTTOM DRAWER ON 24" THRU 39" WIDE
TWO WORKING BOTTOM DRAWERS ON 42", BUTT FRONTS
DRAWER DEPTH IS 21"

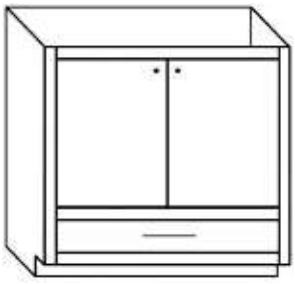

BS39IV-2B

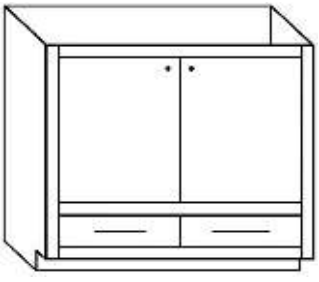

BS42IV-2B

24" DEEP CABINET	LIST PRICE						
	A	B	C	D	E	F	G
BS24IV-2B	1779	1815	2013	2013	2055	2106	2346
BS30IV-2B	1803	1839	2037	2037	2079	2130	2370
BS33IV-2B	1827	1863	2061	2061	2103	2154	2394
BS36IV-2B	1851	1887	2085	2085	2127	2178	2418
BS39IV-2B	1878	1914	2127	2127	2172	2226	2469
BS42IV-2B	2091	2127	2295	2295	2343	2394	2643

A-Bristol, Prairie, Savannah15
B-Plateau, Ridgegate, Summerhill
C-Augusta15, Bedford, Charleston15, Easton, Fairway, Gateway, Harbor, Hastings15, Liberty, Seneca, Vicksburg
D-Regency
E-
F-
G-Aspen15, Centennial15, Madison15, Norfolk15, Orleans, Riverton

SEE PAGE 54 FOR DOORS AVAILABLE IN MOLDED & PRICING

CABINET TYPE — BASES

34 1/2" TALL FARM SINK BASE

12" SOLID TOP RAIL W/BUTT DOORS BELOW
WILL NOT CUT OUT SINK AREA
MOD TO DECREASE HEIGHT OF TOP RAIL IS ON PAGE **353**
KOCH CABINETS MAY NOT BE RESPONSIBLE FOR JOINT OR WOOD STRESS DUE TO THE WEIGHT OF THE FARM SINK. INSTALLERS SHOULD REINFORCE THE WEIGHT OF THE FARM SINK AS SUGGEST BY SINK MFG INSTALLATION GUIDE
THE DOORS OVERLAY THE TOP RAIL 1/2" ON STANDARD AND FULL OVERLAY

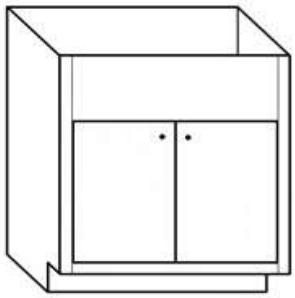

BS33F-2B

24" DEEP CABINET	LIST PRICE						
	A	B	C	D	E	F	G
BS30F-2B	2049	2085	2247	2247	2289	2319	2478
BS33F-2B	2079	2115	2277	2277	2319	2349	2508
BS36F-2B	2109	2145	2307	2307	2349	2379	2538
BS39F-2B	2139	2175	2337	2337	2379	2409	2568

48" TALL DISHWASHER BASE W/DRAWER

24" X 34 1/2" TALL OPENING
4 1/2" DRAWER OPENING - 1 1/2" STILES & TOP RAIL
DRAWER DEPTH IS 21"

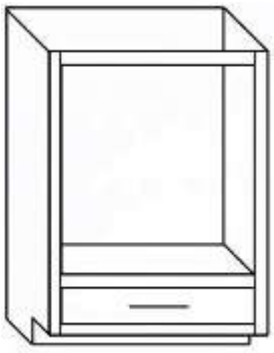

B27DW-DWR

24" DEEP CABINET	LIST PRICE						
	A	B	C	D	E	F	G
B27DW-DWR	1167	1167	1167	1167	1167	1167	1167

WE WILL FILL IN OPENING IF NEEDED, WE WILL NOT CUT OUT.
MINIMUM 1/2" FILL IN ON EACH SIDE.

42" TALL DISHWASHER BASE

24" X 34 1/2" TALL OPENING - 1 1/2" STILES & 1 3/4" RAILS

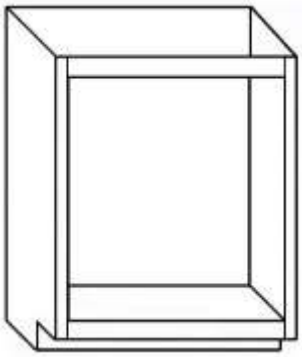

B27DW

24" DEEP CABINET	LIST PRICE						
	A	B	C	D	E	F	G
B27DW	714	714	714	714	714	714	714

WE WILL FILL IN OPENING IF NEEDED, WE WILL NOT CUT OUT.
MINIMUM 1/2" FILL IN ON EACH SIDE.

A-Bristol, Prairie, Savannah15
B-Plateau, Ridgegate, Summerhill
C-Augusta15, Bedford, Charleston15, Easton, Fairway, Gateway, Harbor, Hastings15, Liberty, Seneca, Vicksburg
D-Regency
E-
F-
G-Aspen15, Centennial15, Madison15, Norfolk15, Orleans, Riverton

SEE PAGE 54 FOR DOORS AVAILABLE IN MOLDED & PRICING

CABINET TYPE — BASES

34 1/2" TALL BASE WITH WARMING DRAWER & TWO WORKING DRAWERS

ENTIRE ORDER WILL NOT BE PROCESSED UNTIL HEIGHT DIMENSION OF WARMING DRAWER OPENING IS SUBMITTED.

WARMING DRAWER WITH FUNCTIONAL DRAWER BOXES ABOVE AND BELOW CUTOUT. THERE WILL BE A FLOOR ABOVE AND BELOW THE WARMING TRAY OPENING.



BWDWR24

24" DEEP CABINET	LIST PRICE						
	A	B	C	D	E	F	G
BWDWR24	1521	1521	1521	1521	1521	1521	1521
BWDWR27	1785	1785	1785	1785	1785	1785	1785
BWDWR30	2049	2049	2049	2049	2049	2049	2049
BWDWR33	2316	2316	2316	2316	2316	2316	2316
BWDWR36	2580	2580	2580	2580	2580	2580	2580

34 1/2" TALL RANGE BASE W/2 DRAWERS

ONE WIDE FALSE FRONT

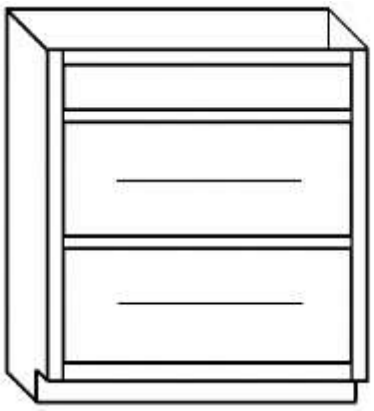

BR30DWR-3

24" DEEP CABINET	LIST PRICE						
	A	B	C	D	E	F	G
BR30DWR-3	2049	2049	2049	2049	2049	2049	2049
BR33DWR-3	2316	2316	2316	2316	2316	2316	2316
BR36DWR-3	2580	2580	2580	2580	2580	2580	2580
BR39DWR-3	2730	2730	2730	2730	2730	2730	2730

A-Bristol, Prairie, Savannah15
B-Plateau, Ridgegate, Summerhill
C-Augusta15, Bedford, Charleston15, Easton, Fairway, Gateway, Harbor, Hastings15, Liberty, Seneca, Vicksburg
D-Regency
E-
F-
G-Aspen15, Centennial15, Madison15, Norfolk15, Orleans, Riverton

SEE PAGE 54 FOR DOORS AVAILABLE IN MOLDED & PRICING

CABINET TYPE — BASES

34 1/2" TALL RANGE BASE

BR30 THRU BR39 HAVE ONE WIDE FALSE FRONT
BR42-B WILL HAVE BUTT DRAWER FALSE FRONTS
FULL DEPTH ADJUSTABLE SHELF



BR30-2B

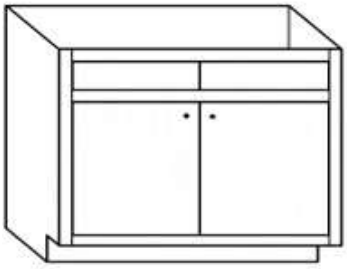

BR42-2B

24" DEEP CABINET	LIST PRICE						
	A	B	C	D	E	F	G
BR30-2B	1203	1239	1392	1392	1434	1458	1626
BR33-2B	1230	1266	1428	1428	1473	1500	1668
BR36-2B	1296	1332	1509	1509	1551	1584	1764
BR39-2B	1320	1356	1557	1557	1596	1629	1815
BR42-2B	1356	1392	1596	1596	1638	1671	1866

34 1/2" TALL RANGE BASE W/2 ADJ ROLLOUTS

NO SHELF - ONE WIDE FALSE FRONT - BUTT DOORS
ADJUSTABLE ROLLOUTS
ROLLOUTS ARE 3 1/2" TALL
MINIMUM WIDTH OF ROLLOUTS IS 15" - NO MODIFICATIONS

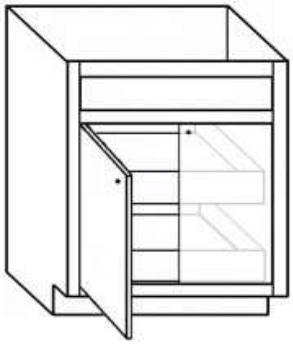

BR30-2R-2B

DRAWER BOX, ROLLOUTS AND TRACK WILL MATCH PER ORDER.
DRAWER BOX/TRACK SELECTION UPCHARGES WILL APPLY.

TO PROTECT THE DOOR FROM SCRATCHES, BUMPERS WILL BE INSTALLED ON THE ROLLOUT SIDE THAT IS AGAINST THE DOOR. THIS WILL BE ON ALL STANDARD OVERLAY ROLLOUTS AND ON MODIFIED FULL OVERLAY ROLLOUTS WHERE SPACE ALLOWS.

24" DEEP CABINET	LIST PRICE						
	A	B	C	D	E	F	G
BR30-2R-2B	1923	1959	2112	2112	2154	2178	2346
BR33-2R-2B	1950	1986	2148	2148	2193	2220	2388
BR36-2R-2B	2016	2052	2229	2229	2271	2304	2484
BR39-2R-2B	2040	2076	2277	2277	2316	2349	2535

ROSKUMFE-UPGRADE PAGE 348

34 1/2" TALL OVEN BASE

28 1/2" x 27" TALL OPENING
WE WILL FILL IN MAX 6" IN THE OPENING (3" ON EACH SIDE) IF NEEDED.
WE WILL NOT CUT OUT.
MINIMUM 1/2" FILL IN ON EACH SIDE

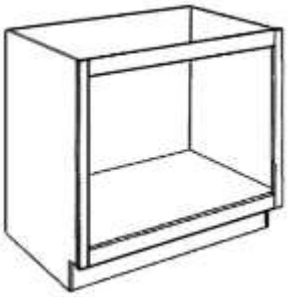

24" DEEP CABINET	LIST PRICE						
	A	B	C	D	E	F	G
BO32	684	684	684	684	684	684	684

A-Bristol, Prairie, Savannah15
B-Plateau, Ridgegate, Summerhill
C-Augusta15, Bedford, Charleston15, Easton, Fairway, Gateway, Harbor, Hastings15, Liberty, Seneca, Vicksburg
D-Regency
E-
F-
G-Aspen15, Centennial15, Madison15, Norfolk15, Orleans, Riverton

SEE PAGE 54 FOR DOORS AVAILABLE IN MOLDED & PRICING

CABINET TYPE

BASES

34 1/2" TALL MICROWAVE BASE W/LOWER DRAWER

MICROWAVE OPENING 16 1/4" TALL - 9" TALL DRAWER OPENING
MAPLE PRINT INTERIOR IS STANDARD
WE WILL FILL IN MAX 6" IN THE OPENING (3" ON EACH SIDE) IF NEEDED.
WE WILL NOT CUT OUT. MINIMUM 1/2" FILL IN ON EACH SIDE

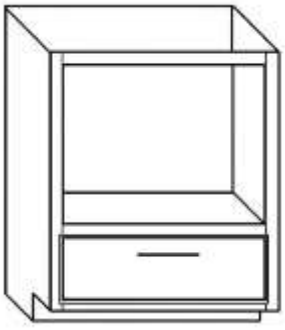

BMW24ND-1.75

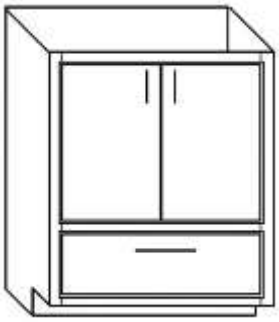

BMW24-1.75-2B

24" DEEP CABINET	LIST PRICE						
	A	B	C	D	E	F	G
BMW24ND-1.75	1449	1449	1449	1449	1449	1449	1449
BMW27ND-1.75	1659	1659	1659	1659	1659	1659	1659
BMW30ND-1.75	1698	1698	1698	1698	1698	1698	1698
BMW32ND-1.75	1788	1788	1788	1788	1788	1788	1788
WITH FINISHED MICROWAVE INTERIOR							
BMW24NDFI-1.75	2343	2343	2343	2343	2343	2343	2343
BMW27NDFI-1.75	2553	2553	2553	2553	2553	2553	2553
BMW30NDFI-1.75	2592	2592	2592	2592	2592	2592	2592
BMW32NDFI-1.75	2682	2682	2682	2682	2682	2682	2682
WITH BUTT DOORS							
BMW24-1.75-2B	2004	2040	2061	2061	2103	2145	2193
BMW27-1.75-2B	2205	2238	2271	2271	2310	2361	2409
BMW30-1.75-2B	2244	2280	2310	2310	2352	2409	2457
BMW32-1.75-2B	2286	2322	2352	2352	2394	2451	2499

34 1/2" TALL W/BUILT IN MICROWAVE DWR & LOWER DRW

MICROWAVE DRAWER OPENING IS 14 1/2" TALL
LOWER DRAWER OPENING IS 9" TALL
MAPLE PRINT INTERIOR IS STANDARD
WE WILL FILL IN MAX 6" IN THE OPENING (3" ON EACH SIDE) IF NEEDED.
WE WILL NOT CUT OUT. MINIMUM 1/2" FILL IN ON EACH SIDE

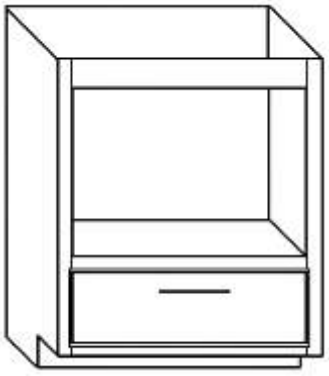

24" DEEP CABINET	LIST PRICE						
	A	B	C	D	E	F	G
BMWDWR24BI-3.5	1494	1494	1494	1494	1494	1494	1494
BMWDWR27BI-3.5	1704	1704	1704	1704	1704	1704	1704
BMWDWR30BI-3.5	1743	1743	1743	1743	1743	1743	1743
BMWDWR32BI-3.5	1833	1833	1833	1833	1833	1833	1833

34 1/2" TALL BUILT IN MICROWAVE W/LOWER DRAWER

MICROWAVE OPENING 17" TALL - 6 1/2" TALL DRAWER OPENING
MAPLE PRINT INTERIOR IS STANDARD
WE WILL FILL IN MAX 6" IN THE OPENING (3" ON EACH SIDE) IF NEEDED.
WE WILL NOT CUT OUT. MINIMUM 1/2" FILL IN ON EACH SIDE

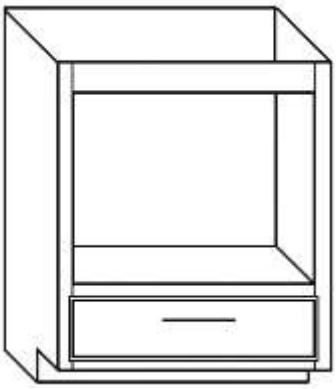

24" DEEP CABINET	LIST PRICE						
	A	B	C	D	E	F	G
BMW24BI-3.5	1494	1494	1494	1494	1494	1494	1494
BMW27BI-3.5	1704	1704	1704	1704	1704	1704	1704
BMW30BI-3.5	1743	1743	1743	1743	1743	1743	1743
BMW32BI-3.5	1833	1833	1833	1833	1833	1833	1833

A-Bristol, Prairie, Savannah15
B-Plateau, Ridgegate, Summerhill
C-Augusta15, Bedford, Charleston15, Easton, Fairway, Gateway, Harbor, Hastings15, Liberty, Seneca, Vicksburg
D-Regency
E-
F-
G-Aspen15, Centennial15, Madison15, Norfolk15, Orleans, Riverton

SEE PAGE 54 FOR DOORS AVAILABLE IN MOLDED & PRICING

CABINET TYPE — BASES

34 1/2" TALL POTS & PANS BASE W/2 DWRS & 1 ROLLOUT

12 5/8" DRAWER OPENING - BOTTOM DRAWER BOX IS 10 1/2" TALL
TOP DRAWER BOX IS 7" TALL
DOVETAIL DRAWERS WITH FULL EXTENSION UNDERMOUNT GUIDE
FULL EXTENSION DOVETAIL ROLLOUT SHELF - 3 1/2" TALL
N/A MORE THAN 39" WIDE OR 34 1/2" TALL



24" DEEP CABINET	LIST PRICE						
	A	B	C	D	E	F	G
B24PPRO	2910	2910	2910	2910	2910	2910	2910
B27PPRO	3294	3294	3294	3294	3294	3294	3294
B30PPRO	3675	3675	3675	3675	3675	3675	3675
B33PPRO	3930	3930	3930	3930	3930	3930	3930
B36PPRO	4185	4185	4185	4185	4185	4185	4185
B39PPRO	4440	4440	4440	4440	4440	4440	4440

34 1/2" TALL POTS & PANS BASE W/BUTT DOORS & 1 DWR

12 5/8" DRAWER OPENING - DRAWER BOX IS 10 1/2" TALL
DOVETAIL DRAWER WITH FULL EXTENSION UNDERMOUNT GUIDE
INCLUDES ONE DOVETAIL ROLLOUT IN TOP SECTION - 3 1/2" TALL
N/A MORE THAN 39" WIDE OR 34 1/2" TALL

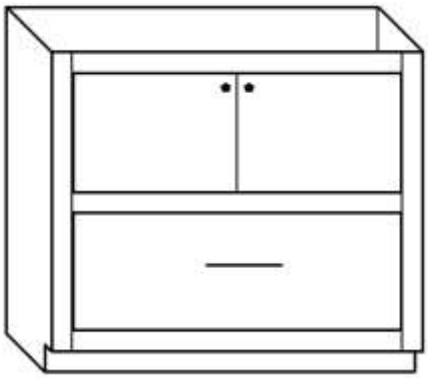

24" DEEP CABINET	LIST PRICE						
	A	B	C	D	E	F	G
B27PPDR-2B	2754	2790	2820	2820	2862	2907	3504
B30PPDR-2B	2796	2832	2862	2862	2901	2946	3495
B33PPDR-2B	2835	2871	2901	2901	2943	2958	3606
B36PPDR-2B	2877	2913	2943	2943	3000	2988	3657
B39PPDR-2B	2922	2958	2988	2988	3045	3030	3702

34 1/2" TALL POTS & PANS BASE W/2 DRAWERS

12 5/8" DRAWER OPENINGS - DRAWER BOXES ARE 10 1/2" TALL
DOVETAIL DRAWERS WITH FULL EXTENSION UNDERMOUNT GUIDE
N/A MORE THAN 39" WIDE OR 34 1/2" TALL

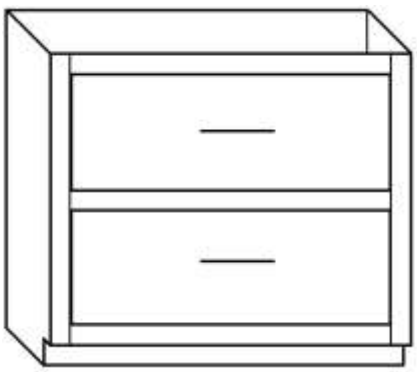

24" DEEP CABINET	LIST PRICE						
	A	B	C	D	E	F	G
B24PP	2253	2253	2253	2253	2253	2253	2253
B27PP	2514	2514	2514	2514	2514	2514	2514
B30PP	2733	2733	2733	2733	2733	2733	2733
B33PP	2964	2964	2964	2964	2964	2964	2964
B36PP	3189	3189	3189	3189	3189	3189	3189
B39PP	3714	3714	3714	3714	3714	3714	3714

A-Bristol, Prairie, Savannah15
B-Plateau, Ridgegate, Summerhill
C-Augusta15, Bedford, Charleston15, Easton, Fairway, Gateway, Harbor, Hastings15, Liberty, Seneca, Vicksburg
D-Regency
E-
F-
G-Aspen15, Centennial15, Madison15, Norfolk15, Orleans, Riverton

SEE PAGE 54 FOR DOORS AVAILABLE IN MOLDED & PRICING

CABINET TYPE — BASES

34 1/2" TALL BASE BLIND CORNER

L AND R INDICATES BLIND PLACEMENT
CAN BE PULLED UP TO 4" - MINIMUM PULL IS 1"
SINGLE DOOR CABINETS WILL BE HINGED TO BLIND SIDE
SEE PAGE 360 FOR FINISH ON BLIND OPENING
STANDARD DEPTH SHELF


B42BCL

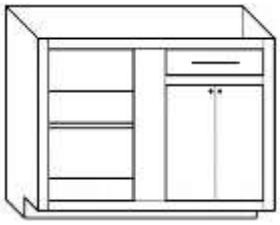
B48BC-2BL

24" DEEP CABINET	LIST PRICE						
	A	B	C	D	E	F	G
B36BCL	1239	1254	1344	1344	1368	1407	1455
B36BCR	1239	1254	1344	1344	1368	1407	1455
B39BCL	1281	1296	1398	1398	1422	1461	1509
B39BCR	1281	1296	1398	1398	1422	1461	1509
B42BCL	1320	1338	1452	1452	1473	1518	1566
B42BCR	1320	1338	1452	1452	1473	1518	1566
B45BCL	1362	1377	1506	1506	1524	1575	1623
B45BCR	1362	1377	1506	1506	1524	1575	1623
B48BCL	1413	1428	1569	1569	1593	1644	1692
B48BCR	1413	1428	1569	1569	1593	1644	1692
B48BC-2BL	1515	1479	1530	1530	1695	1746	1794
B48BC-2BR	1515	1479	1530	1530	1695	1746	1794

34 1/2" TALL BASE BLIND CORNER W/FULL HEIGHT DOOR

L AND R INDICATES BLIND PLACEMENT
CAN BE PULLED UP TO 4" - MINIMUM PULL IS 1"
SINGLE DOOR CABINETS WILL BE HINGED TO BLIND SIDE
SEE PAGE 360 FOR FINISH ON BLIND OPENING
TWO FULL DEPTH SHELVES

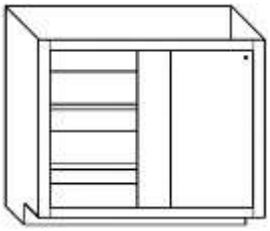
B36BCFHD-L

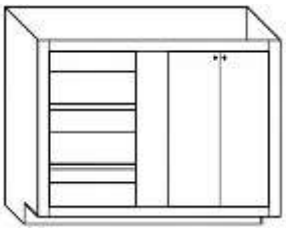
B48BCFHD-2BL

24" DEEP CABINET	LIST PRICE						
	A	B	C	D	E	F	G
B36BCFHD-L	1101	1116	1206	1206	1230	1269	1317
B36BCFHD-R	1101	1116	1206	1206	1230	1269	1317
B39BCFHD-L	1143	1158	1260	1260	1284	1323	1371
B39BCFHD-R	1143	1158	1260	1260	1284	1323	1371
B42BCFHD-L	1182	1200	1314	1314	1335	1380	1428
B42BCFHD-R	1182	1200	1314	1314	1335	1380	1428
B45BCFHD-L	1224	1239	1368	1368	1386	1437	1485
B45BCFHD-R	1224	1239	1368	1368	1386	1437	1485
B48BCFHD-L	1275	1290	1431	1431	1455	1506	1554
B48BCFHD-R	1275	1290	1431	1431	1455	1506	1554
B48BCFHD-2BL	1377	1392	1533	1533	1557	1608	1656
B48BCFHD-2BR	1377	1392	1533	1533	1557	1608	1656

34 1/2" TALL BASE BLIND CORNER W/HALF MOON SHELF

REV-A-SHELF

POLY SHELVES
42 HAS - 31" TRAY
45 HAS - 33" TRAY
48 HAS - 39" TRAY

CAN BE PULLED UP TO 4" - MINIMUM IS 1"

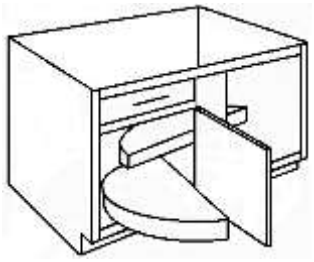

24" DEEP CABINET	LIST PRICE						
	A	B	C	D	E	F	G
POLY SHELVES							
B42BCHML	2985	3006	3192	3192	3216	3348	3399
B42BCHMR	2985	3006	3192	3192	3216	3348	3399
B45BCHML	3027	3048	3246	3246	3267	3408	3459
B45BCHMR	3027	3048	3246	3246	3267	3408	3459
B48BCHML	3081	3102	3315	3315	3339	3474	3525
B48BCHMR	3081	3102	3315	3315	3339	3474	3525

34 1/2" TALL BASE BLIND CORNER W/HALF MOON SHELF

REV-A-SHELF

WOOD GIRASOLO SHELVES
39 HAS - 33" TRAY
42 HAS - 35" TRAY
45 HAS - 38" TRAY

CABINET STILES WILL BE ADJUSTED TO 1 1/2" WHEN INSTALLED. THE CABINET WILL NEED TO BE PULLED AN EXTRA 1 1/2" FROM THE WALL TO ALLOW FOR SPACE OF HANDLE OR HARDWARE, THEN TO ALLOW THE SHELVES TO TRAVEL. (MINIMUM PULL OF 3")

33 LB. CAPACITY PER SHELF



24" DEEP CABINET	LIST PRICE						
	A	B	C	D	E	F	G
WOOD GIRASOLO SHELVES							
B39BCGWHML	4755	4776	4932	4932	4956	5088	5139
B39BCGWHMR	4755	4776	4932	4932	4956	5088	5139
B42BCGWHML	4824	4845	5001	5001	5025	5157	5208
B42BCGWHMR	4824	4845	5001	5001	5025	5157	5208
B45BCGWHML	5175	5196	5352	5352	5376	5508	5559
B45BCGWHMR	5175	5196	5352	5352	5376	5508	5559

A-Bristol, Prairie, Savannah15
B-Plateau, Ridgegate, Summerhill
C-Augusta15, Bedford, Charleston15, Easton, Fairway, Gateway, Harbor, Hastings15, Liberty, Seneca, Vicksburg
D-Regency
E-
F-
G-Aspen15, Centennial15, Madison15, Norfolk15, Orleans, Riverton

SEE PAGE 54 FOR DOORS AVAILABLE IN MOLDED & PRICING

CABINET TYPE

BASES

34 1/2" ISLAND BASE W/FULL DEPTH SHELF

5 3/4" FLUSH TOE KICK ON BACK
B12IB THRU B39IB HAS ONE WIDE DRAWER
FULL DEPTH ADJUSTABLE SHELF WITH BOTH EDGES BANDED
DRAWERS OPEN TO RECESSED TOE KICK SIDE
L OR R IS THE FRONT HINGE. BACK SIDE HINGE WILL BE OPPOSITE
WE RECOMMEND USING THE 48-8B FOR VERY HEAVY COUNTER TOPS



B39IB-4B



B42IB-4B

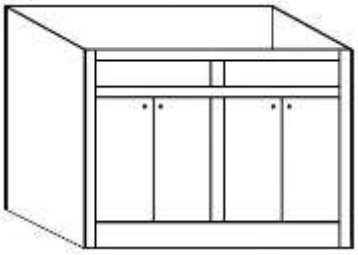

B48IB-8B - BACK VIEW

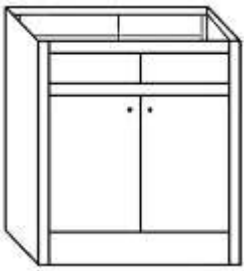

B24IB-2B - BACK VIEW

24" DEEP CABINET	LIST PRICE						
	A	B	C	D	E	F	G
B12IBL	1455	1494	1785	1785	1950	2007	2064
B12IBR	1455	1494	1785	1785	1950	2007	2064
B15IBL	1557	1596	1890	1890	2052	2109	2190
B15IBR	1557	1596	1890	1890	2052	2109	2190
B18IBL	1659	1698	1998	1998	2157	2214	2316
B18IBR	1659	1698	1998	1998	2157	2214	2316
B21IBL	1761	1800	2103	2103	2265	2322	2442
B21IBR	1761	1800	2103	2103	2265	2322	2442
B24IBL	1863	1902	2211	2211	2373	2430	2568
B24IBR	1863	1902	2211	2211	2373	2430	2568
B24IB-4B	2118	2157	2463	2463	2628	2685	2820
B27IB-4B	2286	2325	2631	2631	2796	2853	3051
B30IB-4B	2517	2598	2847	2847	3009	3066	3300
B33IB-4B	2619	2700	2952	2952	3111	3168	3429
B36IB-4B	2772	2853	3111	3111	3276	3333	3615
B39IB-4B	2898	2979	3240	3240	3402	3459	3750
B42IB-4B	3165	3246	3510	3510	3672	3729	3531
B45IB-8B	3555	3636	3951	3951	4110	4173	4506
B48IB-8B	3738	3819	4095	4095	4257	4314	4674

34 1/2" ISLAND CORNER BASE

FULL DEPTH SHELF
5 3/4" WIDE STILES ON BACK SIDE
TOE KICK ON BOTH SIDES



B27IPC-2B



B27IPC-FHD-2B

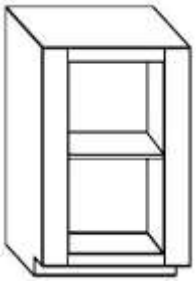

BACK VIEW

24" DEEP CABINET	LIST PRICE						
	A	B	C	D	E	F	G
B27IPC-2B	2025	2067	2427	2427	2469	2538	2820
B27IPC-FHD-2B	1887	1929	2289	2289	2331	2403	2682

A-Bristol, Prairie, Savannah15
B-Plateau, Ridgegate, Summerhill
C-Augusta15, Bedford, Charleston15, Easton, Fairway, Gateway, Harbor, Hastings15, Liberty, Seneca, Vicksburg
D-Regency
E-
F-
G-Aspen15, Centennial15, Madison15, Norfolk15, Orleans, Riverton

SEE PAGE 54 FOR DOORS AVAILABLE IN MOLDED & PRICING

CABINET TYPE

BASES

34 1/2" ISLAND CORNER BASE BLIND

36" & 39" HAVE ONE WIDE FALSE FRONT ON BACK
42" THRU 48" HAVE TWO FALSE FRONTS ON BACK
FULL DEPTH SHELF
5 3/4" FLUSH TOE KICK ON BACK
L & R INDICATE BLIND SIDE
SINGLE DOOR CABINETS WILL BE HINGED TO BLIND SIDE
SEE PAGE 356 FOR FINISH ON BLIND OPENING

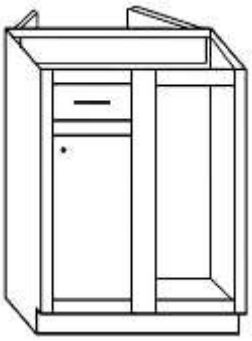

B36IBBCR-2B FRONT VIEW



B42IBBCR-2B BACK VIEW



B48IBBCR-6B FRONT VIEW



B48IBBCR-6B BACK VIEW

24" DEEP CABINET	LIST PRICE						
	A	B	C	D	E	F	G
B36IBBCL-2B	3576	3603	3756	3756	3795	3849	3903
B36IBBCR-2B	3576	3603	3756	3756	3795	3849	3903
B39IBBCL-2B	3645	3672	3846	3846	3888	3942	3996
B39IBBCR-2B	3645	3672	3846	3846	3888	3942	3996
B42IBBCL-2B	3717	3741	3936	3936	3975	4029	4083
B42IBBCR-2B	3717	3741	3936	3936	3975	4029	4083
B45IBBCL-2B	3786	3810	4029	4029	4062	4116	4170
B45IBBCR-2B	3786	3810	4029	4029	4062	4116	4170
B48IBBCL-6B	4980	5004	5223	5223	5256	5310	5364
B48IBBCR-6B	4980	5004	5223	5223	5256	5310	5364

RECESSED FRONT DIAGONAL CORNER SINKBASE

NEEDS 42" OR 45" WALL SPACE
REMOVABLE TOE KICK RECESSES IN 4"
3" STILES
ACCOMODATES A 36" SINK

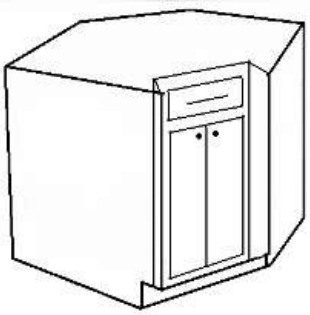

B42RCS-2B

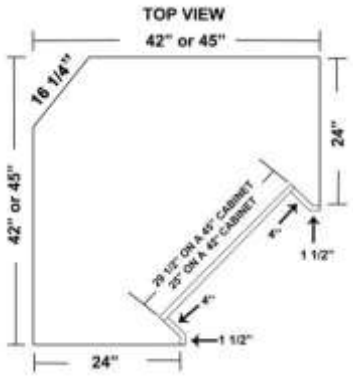

24" DEEP CABINET	LIST PRICE						
	A	B	C	D	E	F	G
B42RCS-2B	3759	3792	3906	3906	3930	3969	4218
B45RCS-2B	4059	4092	4206	4206	4230	4269	4518

A-Bristol, Prairie, Savannah15
B-Plateau, Ridgegate, Summerhill
C-Augusta15, Bedford, Charleston15, Easton, Fairway, Gateway, Harbor, Hastings15, Liberty, Seneca, Vicksburg
D-Regency
E-
F-
G-Aspen15, Centennial15, Madison15, Norfolk15, Orleans, Riverton

SEE PAGE 54 FOR DOORS AVAILABLE IN MOLDED & PRICING

CABINET TYPE — BASES

34 1/2" TALL CORNER LAZY SUSAN W/REVOLVING DOORS

REV-A-SHELF LAZY SUSAN
DOOR REVOLVES WITH SHELVES
RDLS 33" HAS 18" POLY TRAYS AND RDLS 36" HAS 28" POLY TRAYS
RWDLS 36" HAS A 28" WOOD TRAY
REQUIRES 33" OR 36" WALL SPACE FOR INSTALLATION
FINISHED END NEEDS TO BE ORDERED FOR EXPOSED END-SENT LOOSE
NOT AVAILABLE WITH SOFT CLOSE HINGES

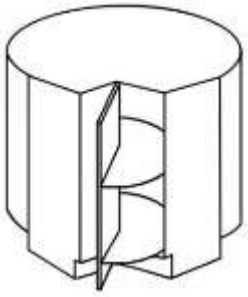

B36RDLS

24" DEEP CABINET	LIST PRICE						
	A	B	C	D	E	F	G
POLY LAZY SUSAN							
B33RDLS	1686	1752	1902	1902	2046	2097	2250
B36RDLS	1821	1884	2046	2046	2184	2235	2415
33" HAS 18" POLY TRAYS AND 36" HAS 28" POLY TRAYS							
WOOD LAZY SUSAN							
B36RWDLS	3237	3303	3462	3462	3603	3654	3834
36" HAS 28" WOOD TRAY							

34 1/2" TALL DIAGONAL CORNER SINK BASE

NEEDS 36", 39", OR 42" WALL SPACE
A DOUBLE SINK BASE REQUIRES A 42" CABINET
2 1/4" STILES
REMOVABLE TOE KICK
FINISHED END NEEDS TO BE ORDERED FOR EXPOSED END-SENT LOOSE
INTEGRATED ENDS NOT RECOMMENDED - SEE PAGE **281**

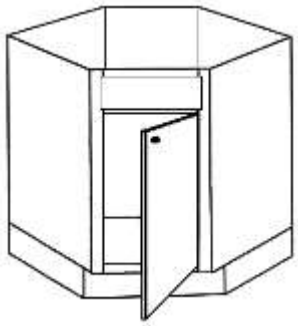

B36DCSR

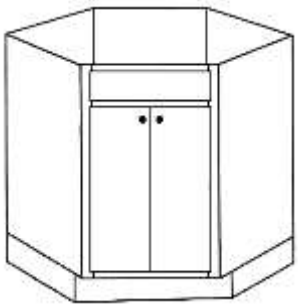

B39DCS-2B

24" DEEP CABINET	LIST PRICE						
	A	B	C	D	E	F	G
B36DCSL	1530	1545	1653	1653	1674	1734	1938
B36DCSR	1530	1545	1653	1653	1674	1734	1938
B39DCS-2B	1608	1641	1755	1755	1776	1839	2055
B42DCS-2B	1659	1692	1806	1806	1830	1899	2118

34 1/2" TALL DIAGONAL CORNER BASE W/SHELF

3/4 DEPTH SHELF
NEEDS 33", 36", 39", OR 42" WALL SPACE
2 1/4" STILES
REMOVABLE TOE KICK
FINISHED END NEEDS TO BE ORDERED FOR EXPOSED END-SENT LOOSE
INTEGRATED ENDS NOT RECOMMENDED - SEE PAGE **281**

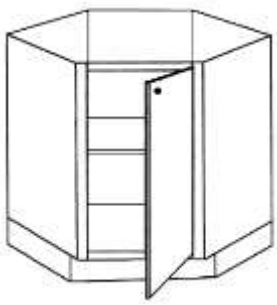

B33DCR

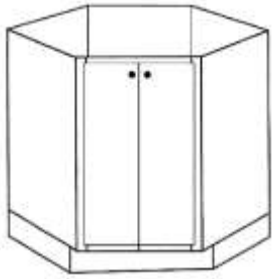

B39DC-2B

24" DEEP CABINET	LIST PRICE						
	A	B	C	D	E	F	G
B33DCL	1632	1674	1761	1761	1779	1848	2076
B33DCR	1632	1674	1761	1761	1779	1848	2076
B36DCL	1683	1725	1812	1812	1830	1899	2127
B36DCR	1683	1725	1812	1812	1830	1899	2127
B39DC-2B	1812	1851	1917	1917	1938	2007	2244
B42DC-2B	1863	1902	1968	1968	1989	2064	2304

A-Bristol, Prairie, Savannah15
B-Plateau, Ridgegate, Summerhill
C-Augusta15, Bedford, Charleston15, Easton, Fairway, Gateway, Harbor, Hastings15, Liberty, Seneca, Vicksburg
D-Regency
E-
F-
G-Aspen15, Centennial15, Madison15, Norfolk15, Orleans, Riverton

SEE PAGE 54 FOR DOORS AVAILABLE IN MOLDED & PRICING

CABINET TYPE — BASES

DIAGONAL CORNER BASE WITH POLY LAZY SUSAN

NEEDS 33", 36", 39", OR 42" WALL SPACE
REMOVABLE TOE KICK
FINISHED END NEEDS TO BE ORDERED FOR EXPOSED END - SENT LOOSE
INTEGRATED ENDS NOT RECOMMENDED - SEE PAGE **281**
WEIGHT CAPACITY 20 LBS PER SQUARE FOOT
2 1/4" STILES

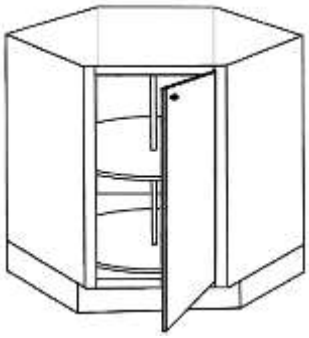

B36DCLSR

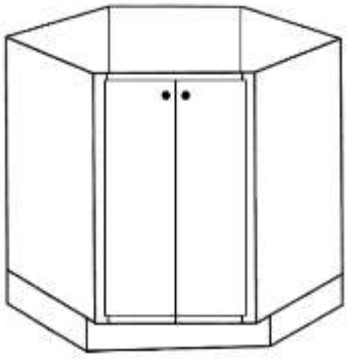

B39DCLS-2B

24" DEEP CABINET	LIST PRICE						
	A	B	C	D	E	F	G
POLY LAZY SUSAN							
B33DCLSL	2622	2649	2799	2799	2820	2940	3300
B33DCLSR	2622	2649	2799	2799	2820	2940	3300
B36DCLSL	2676	2703	2853	2853	2874	2994	3354
B36DCLSR	2676	2703	2853	2853	2874	2994	3354
B39DCLS-2B	2754	2781	2955	2955	2979	3099	3471
B42DCLS-2B	2805	2832	3009	3009	3036	3162	3540

33" HAS 28" POLY SHELVES AND 36" THRU 42" HAS 32" POLY SHELVES

DIAGONAL CORNER BASE WITH NO POLE WOOD LAZY SUSAN

NEEDS 33", 36", 39", OR 42" WALL SPACE
LAZY SUSAN WITH NO POLE - REMOVABLE TOE KICK
FINISHED END NEEDS TO BE ORDERED FOR EXPOSED END-SENT LOOSE
INTEGRATED ENDS NOT RECOMMENDED - SEE PAGE **281**
WEIGHT CAPACITY 20 LBS PER SQUARE FOOT
2 1/4" STILES

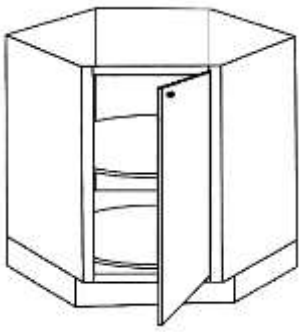

B36DCNPOWLSR

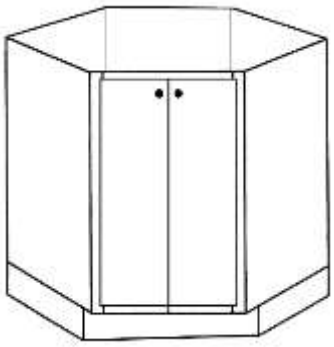

B39DCNPOWLS-2B

24" DEEP CABINET	LIST PRICE						
	A	B	C	D	E	F	G
WOOD LAZY SUSAN							
B33DCNPOWLSL	4362	4383	4695	4695	4716	4935	5535
B33DCNPOWLSR	4362	4383	4695	4695	4716	4935	5535
B36DCNPOWLSL	4389	4410	4722	4722	4746	4962	5568
B36DCNPOWLSR	4389	4410	4722	4722	4746	4962	5568
B39DCNPOWLS-2B	4521	4542	4857	4857	4878	5103	5718
B42DCNPOWLS-2B	4599	4623	4944	4944	4965	5103	5817

33" HAS 28" WOOD SHELVES AND 36" THRU 42" HAS 32" WOOD SHELVES

TWO WOOD TRAYS, ONE ON FLOOR AND ONE ON SHELF

A-Bristol, Prairie, Savannah15
B-Plateau, Ridgegate, Summerhill
C-Augusta15, Bedford, Charleston15, Easton, Fairway, Gateway, Harbor, Hastings15, Liberty, Seneca, Vicksburg
D-Regency
E-
F-
G-Aspen15, Centennial15, Madison15, Norfolk15, Orleans, Riverton

SEE PAGE 54 FOR DOORS AVAILABLE IN MOLDED & PRICING

CABINET TYPE — BASES

BASE EASY REACH W/NO POLE WOOD LAZY SUSAN

WEIGHT CAPACITY 20 LBS PER SQUARE FOOT
NEEDS 33", 36", or 39" OF WALL SPACE
LAZY SUSAN WITH NO POLE
TWO WOOD TRAYS, ONE ON FLOOR AND ONE ON SHELF
33" HAS A 28" WOOD TRAYS 36" & 39" HAVE 32" WOOD TRAYS
REMOVABLE TOE KICK
FINISHED END NEEDS TO BE ORDERED FOR EXPOSED END-SENT LOOSE
NOT AVAILABLE WITH SOFT CLOSE HINGES

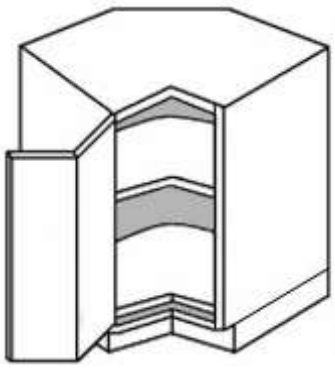

BER36NPWLSL

24" DEEP CABINET	LIST PRICE						
	A	B	C	D	E	F	G
WOOD LAZY SUSAN							
BER33NPOWLSL	4173	4215	4503	4503	4521	4734	5316
BER33NPOWLSR	4173	4215	4503	4503	4521	4734	5316
BER36NPOWLSL	4203	4248	4530	4530	4578	4764	5349
BER36NPOWLSR	4203	4248	4530	4530	4578	4764	5349
BER39NPOWLSL	4284	4326	4614	4614	4659	4851	5448
BER39NPOWLSR	4284	4326	4614	4614	4659	4851	5448

BASE EASY REACH W/REV-A-SHELF POLY LAZY SUSAN

WEIGHT CAPACITY 20 LBS PER SQUARE FOOT
NEEDS 33", 36", or 39" OF WALL SPACE
28" POLY SHELVES
REMOVABLE TOE KICK ON THE BER33
IF SKIN IS ORDERED IT IS SENT LOOSE
NOT AVAILABLE WITH SOFT CLOSE HINGES

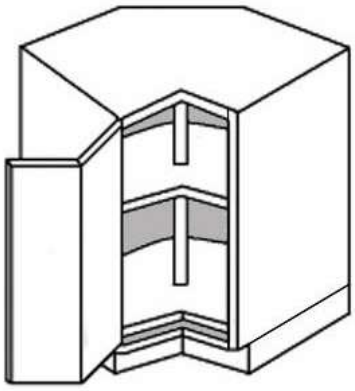

BER36LSL

24" DEEP CABINET	LIST PRICE						
	A	B	C	D	E	F	G
POLY LAZY SUSAN							
BER33LSL	2430	2448	2682	2682	2703	2823	3171
BER33LSR	2430	2448	2682	2682	2703	2823	3171
BER36LSL	2463	2502	2712	2712	2757	2856	3204
BER36LSR	2463	2502	2712	2712	2757	2856	3204
BER39LSL	2544	2580	2796	2796	2844	2943	3303
BER39LSR	2544	2580	2796	2796	2844	2943	3303

A-Bristol, Prairie, Savannah15
B-Plateau, Ridgegate, Summerhill
C-Augusta15, Bedford, Charleston15, Easton, Fairway, Gateway, Harbor, Hastings15, Liberty, Seneca, Vicksburg
D-Regency
E-
F-
G-Aspen15, Centennial15, Madison15, Norfolk15, Orleans, Riverton

SEE PAGE 54 FOR DOORS AVAILABLE IN MOLDED & PRICING

CABINET TYPE — BASES

BASE EASY REACH W/SHELF

3/4 DEPTH SHELF IN BER33 - BER36. FULL DEPTH SHELF (WITH NOTCH) ON BER39
REMOVABLE TOE KICK
FINISHED END NEEDS TO BE ORDERED FOR ANY EXPOSED END
SEE PAGE 270 - END IS SENT LOOSE
NOT AVAILABLE WITH SOFT CLOSE HINGES

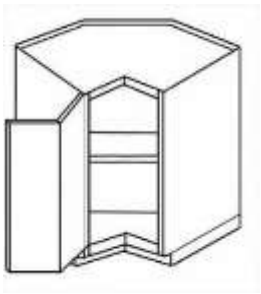

BER36L

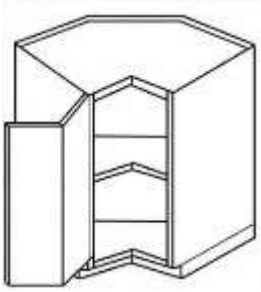

BER39L

24" DEEP CABINET	LIST PRICE						
	A	B	C	D	E	F	G
BER33L	1677	1692	1890	1890	1908	1989	2232
BER33R	1677	1692	1890	1890	1908	1989	2232
BER36L	1710	1743	1917	1917	1965	2022	2265
BER36R	1710	1743	1917	1917	1965	2022	2265
BER39L	1785	1821	1998	1998	2040	2106	2358
BER39R	1785	1821	1998	1998	2040	2106	2358

CORNER BASE WITH THREE PIE CUT DRAWERS

90 DEGREE FRAME
NOT AVAILABLE WITH ANY DRAWER ACCESSORIES OR MODS
NO WIDTH OR DEPTH MODIFICATIONS
DT-UMFE GUIDES
NOT AVAILABLE IN MITER DOOR STYLES & RIVERTON DOOR STYLE
REQUIRES CORNER SPACE OF 36" x 36"

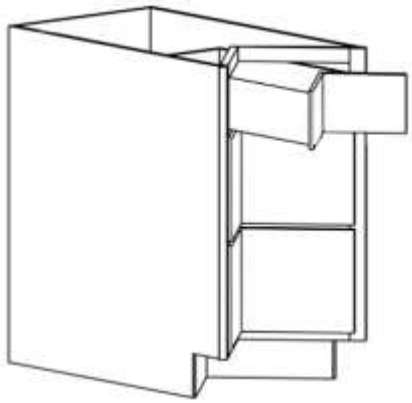

24" DEEP CABINET	LIST PRICE						
	A	B	C	D	E	F	G
BER36DWR-3	4692	4692	4692	4692	4692	4692	4692

DIAGONAL CORNER BASE WITH THREE DOORS

3/4 DEPTH SHELF
LEFT DOOR WILL HINGE LEFT AND RIGHT DOOR WILL HINGE RIGHT
L & R SIGNIFY CENTER DOOR HINGE

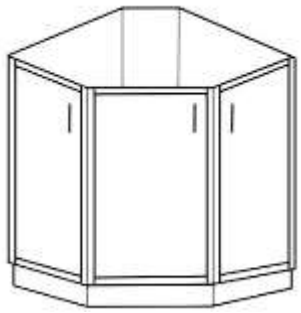

B24DC-3L

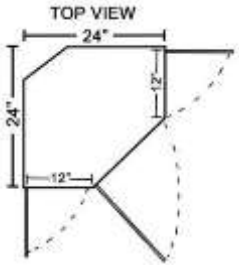

24" DEEP CABINET	LIST PRICE						
	A	B	C	D	E	F	G
B24DC-3L	4614	4629	4854	4854	4875	4986	5316
B24DC-3R	4614	4629	4854	4854	4875	4986	5316

A-Bristol, Prairie, Savannah15
B-Plateau, Ridgegate, Summerhill
C-Augusta15, Bedford, Charleston15, Easton, Fairway, Gateway, Harbor, Hastings15, Liberty, Seneca, Vicksburg
D-Regency
E-
F-
G-Aspen15, Centennial15, Madison15, Norfolk15, Orleans, Riverton

SEE PAGE 54 FOR DOORS AVAILABLE IN MOLDED & PRICING

CABINET TYPE

BASES

34 1/2" TALL DIAGONAL ANGLE BASE

NEEDS 12" OF WALL SPACE
TWO SHELVES
2 1/2" STILES

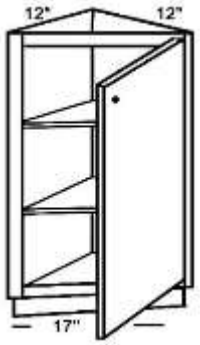

B12DIAR

NEEDS 24" OF WALL SPACE
BUTT DOORS
TWO SHELVES



B24DIA-2B

12" DEEP CABINET	LIST PRICE						
	A	B	C	D	E	F	G
B12DIAL	1047	1089	1338	1338	1470	1509	1584
B12DIAR	1047	1089	1338	1338	1470	1509	1584

24" DEEP CABINET	LIST PRICE						
	A	B	C	D	E	F	G
B24DIA-2B	1173	1215	1464	1464	1596	1632	1710

V-SHAPE ANGLE BASE

NEEDS 24" OF WALL SPACE
TWO SHELVES
LEFT DOOR WILL HINGE LEFT AND RIGHT DOOR WILL HINGE RIGHT

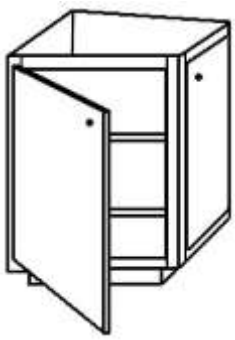

B24V

24" DEEP CABINET	LIST PRICE						
	A	B	C	D	E	F	G
B24V	1473	1515	1764	1764	1896	1947	2010

A-Bristol, Prairie, Savannah15
B-Plateau, Ridgegate, Summerhill
C-Augusta15, Bedford, Charleston15, Easton, Fairway, Gateway, Harbor, Hastings15, Liberty, Seneca, Vicksburg
D-Regency
E-
F-
G-Aspen15, Centennial15, Madison15, Norfolk15, Orleans, Riverton

SEE PAGE 54 FOR DOORS AVAILABLE IN MOLDED & PRICING

CABINET TYPE

BASES

BASE ANGLE TRANSITION

USED TO FORM A 135 DEGREE CORNER
LEFT DOOR WILL HINGE LEFT AND RIGHT DOOR WILL HINGE RIGHT
2 SHELVES
1 3/4" STILES

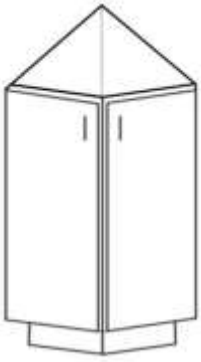

B24V-135

24" DEEP CABINET	LIST PRICE						
	A	B	C	D	E	F	G
B24V-135	1449	1491	1740	1740	1872	1914	1974

BASE TRANSITION 24

L & R INDICATES PLACEMENT OF SHORTER DEPTH SIDE
DOOR WILL HINGE ON SHORTER DEPTH SIDE
2 1/2" STILES

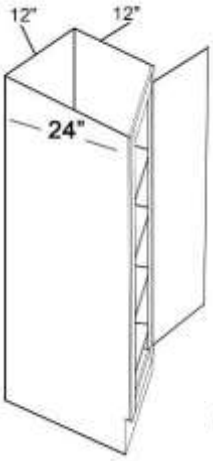

BA12U24U12R

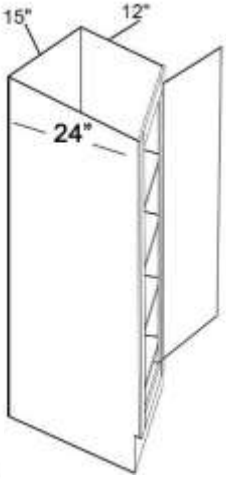

BA15U24U12R

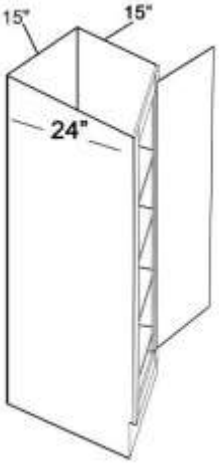

BA15U24U15R

TOP VIEW ON PAGE 159

24" DEEP CABINET	LIST PRICE						
	A	B	C	D	E	F	G
BA12U24U12L	1122	1164	1413	1413	1545	1584	1659
BA12U24U12R	1122	1164	1413	1413	1545	1584	1659
BA15U24U12L	1173	1215	1464	1464	1596	1644	1719
BA15U24U12R	1173	1215	1464	1464	1596	1644	1719
BA15U24U15L	1224	1266	1515	1515	1647	1695	1770
BA15U24U15R	1224	1266	1515	1515	1647	1695	1770

A-Bristol, Prairie, Savannah15
B-Plateau, Ridgegate, Summerhill
C-Augusta15, Bedford, Charleston15, Easton, Fairway, Gateway, Harbor, Hastings15, Liberty, Seneca, Vicksburg
D-Regency
E-
F-
G-Aspen15, Centennial15, Madison15, Norfolk15, Orleans, Riverton

SEE PAGE 54 FOR DOORS AVAILABLE IN MOLDED & PRICING

CABINET TYPE — BASES

SINK FRONT W/ATTACHED TOE KICK

ONE WIDE FALSE FRONT
TOE KICK ATTACHED
1 3/4" SOLID STILES

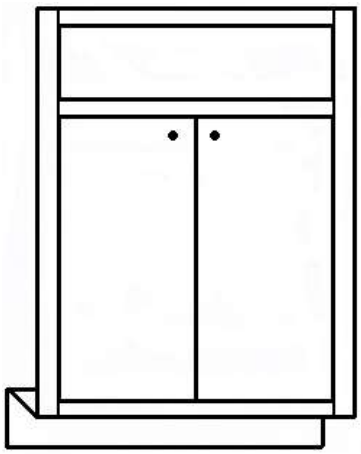

SEE PAGE 376 FOR FLOOR OPTIONS

CABINET FRONT	LIST PRICE						
	A	B	C	D	E	F	G
BSF24-2B	768	801	879	879	921	969	1023
BSF27-2B	792	825	903	903	945	993	1047
BSF30-2B	816	852	927	927	975	1023	1080
BSF33-2B	843	876	954	954	999	1047	1113
BSF36-2B	867	903	984	984	1026	1074	1143

DIAGONAL SINK FRONT W/ATTACHED TOE KICK

DC STILES
ONE WIDE FALSE FRONT
TOE KICK ATTACHED

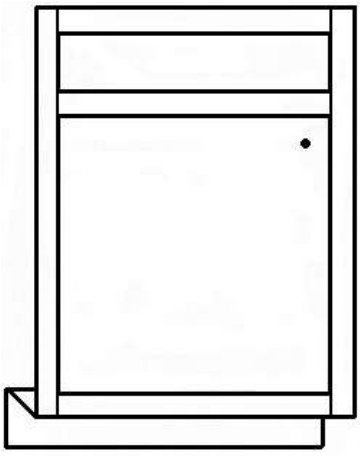

BSF36DIAL
SEE PAGE 376 FOR FLOOR OPTIONS

CABINET FRONT	LIST PRICE						
	A	B	C	D	E	F	G
BSF36DIAL	939	975	1011	1011	1056	1104	1182
BSF36DIAR	939	975	1011	1011	1056	1104	1182
BSF39DIA-2B	1311	1347	1413	1413	1458	1506	1653
BSF42DIA-2B	1341	1377	1449	1449	1488	1536	1689

NOTES OR ADDITIONS

NOTES OR ADDITIONS

VANITY DIMENSIONS

Vanity Base 12" to 39" wide

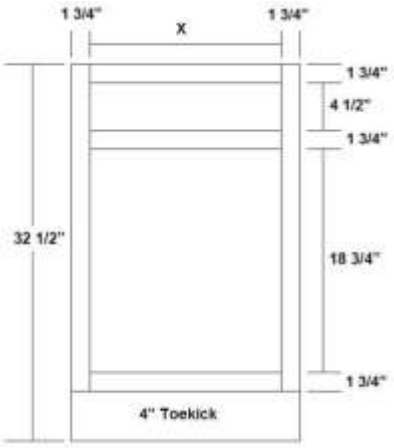

Opening Width Calculation
Cabinet Width: - 3.5" = X

AH Vanity Base 12" to 39" wide

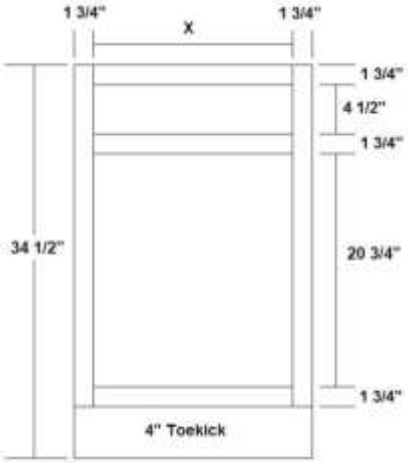

Opening Width Calculation
Cabinet Width: - 3.5" = X

Vanity Base 42B" & 45B"

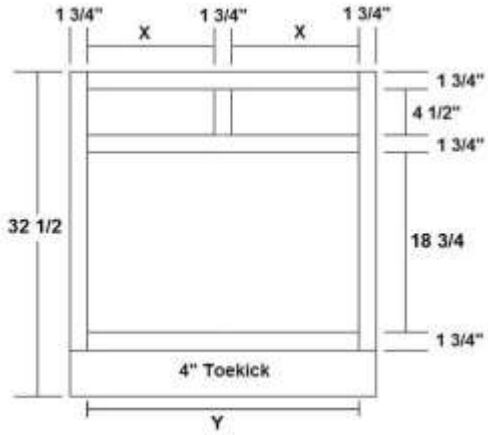

Opening Width Calculation
Cabinet Width: - 5.25" / 2 = X

AH Vanity Base 42B" & 45B"

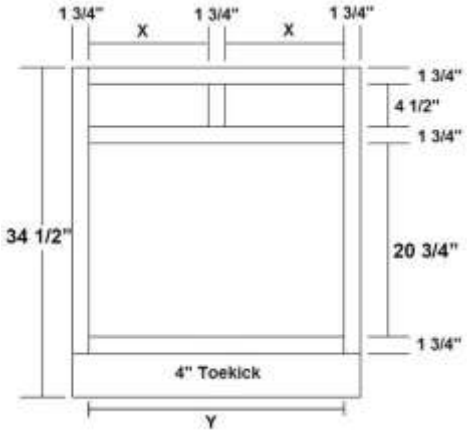

Opening Width Calculation
Cabinet Width: - 5.25" / 2 = X

Vanity Base with Two Drawers and Four Butt Doors
VB48-4B

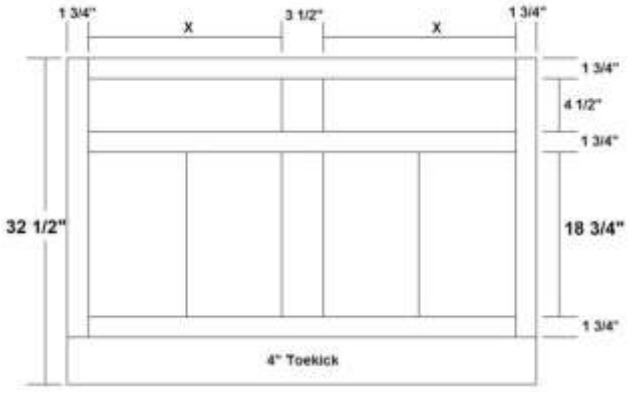

Opening Width Calculation
Cabinet Width - 7" / 2 = X

AH Vanity Base with Two Drawers and Four Butt Doors
VB48-4B

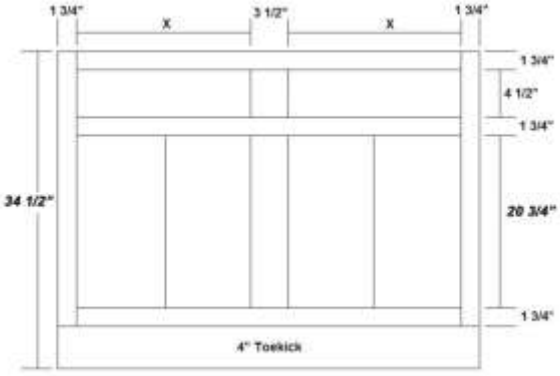

Opening Width Calculation
Cabinet Width - 7" / 2 = X

TOE KICK IS RECESSED BACK 3"

VANITY DIMENSIONS

Vanity Base W/Full Height Doors

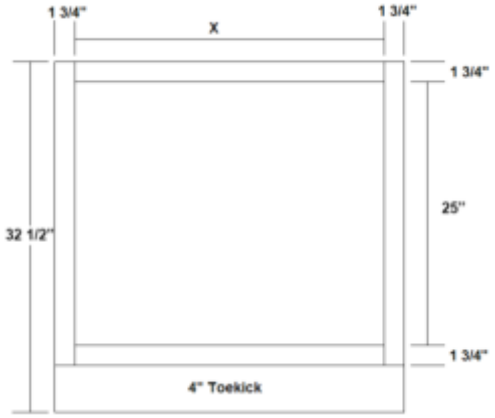

Opening Width Calculation
Cabinet Width: - 3.5" = X

AH Vanity Base W/Full Height Doors

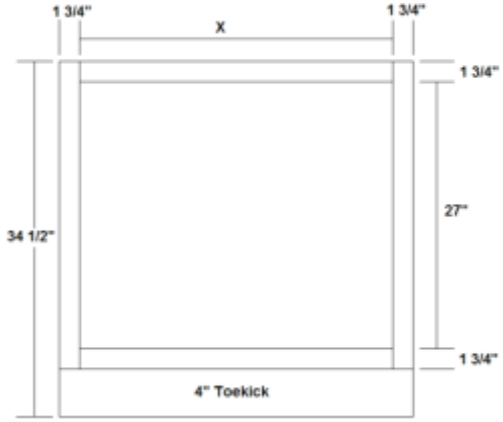

Opening Width Calculation
Cabinet Width: - 3.5" = X

Vanity Base W/Side Drawers 36"- 45" Wide

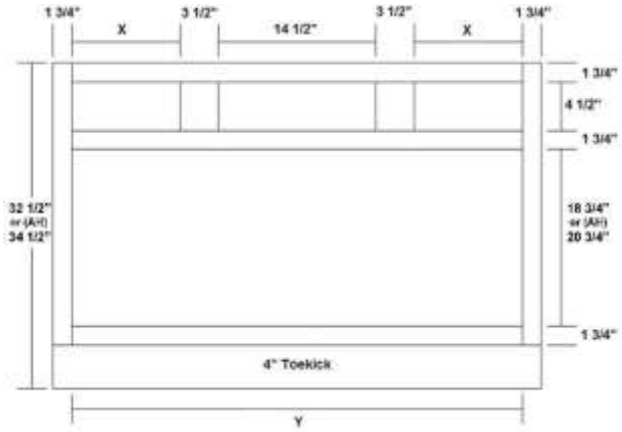

Opening Width Calculation
Drawer = Cabinet Width: - 25" / 2 = X
Door = Cabinet Width: - 3.5" = Y

Vanity Base W/Side Drawers 48"- 72" Wide

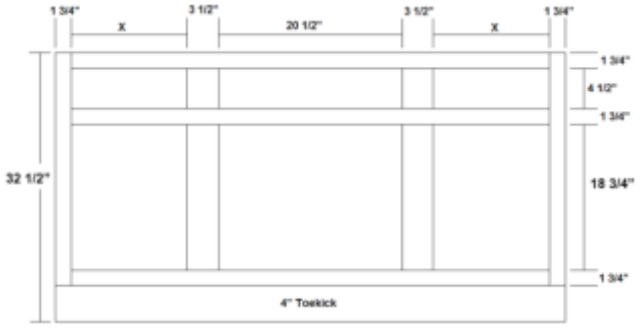

Opening Width Calculation
Cabinet Width: - 31" / 2 = X

AH Vanity Base W/Side Drawers 48"- 72" Wide

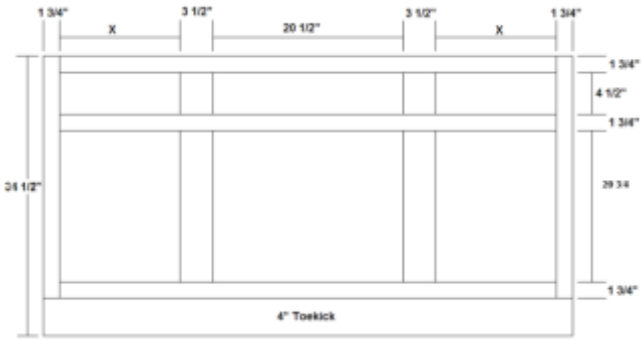

Opening Width Calculation
Cabinet Width: - 31" / 2 = X

TOE KICK IS RECESSED BACK 3"

VANITY DIMENSIONS

Vanity Base W/3 Tub Drawers

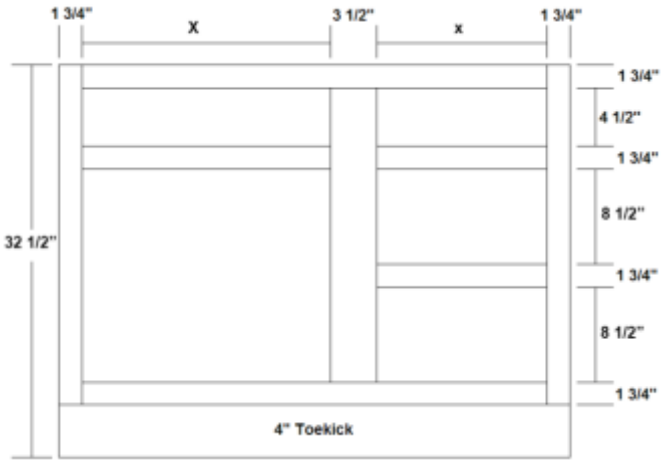

VANITY	DOOR OPEN	DWR OPENING
VB24TD-3	8 1/2	8 1/2
VB27TD-3	13	7
VB30TD-3	14 1/2	8 1/2
VB33TD-3	16	10
VB36TD-3	17 1/2	11 1/2
VB39TD-3	19	13
VB42TD-3	20 1/2	14 1/2
VB45TD-3	22	16
VB48TD-3	23 1/2	17 1/2

VB24TD & VB27TD WILL HAVE A FULL WIDTH DRAWER FRONT AND WILL NOT HAVE A MULLION

AH Vanity Base W/3 Tub Drawers

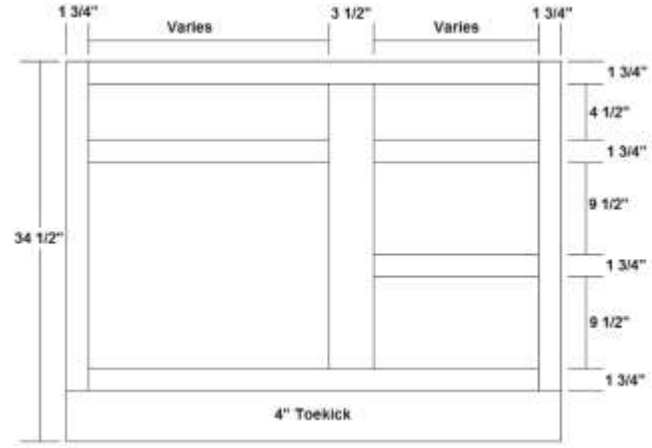

VANITY	DOOR OPEN	DWR OPENING
VB24TD-3-AH	8 1/2	8 1/2
VB27TD-3-AH	13	7
VB30TD-3-AH	14 1/2	8 1/2
VB33TD-3-AH	16	10
VB36TD-3-AH	17 1/2	11 1/2
VB39TD-3-AH	19	13
VB42TD-3-AH	20 1/2	14 1/2
VB45TD-3-AH	22	16
VB48TD-3-AH	23 1/2	17 1/2

VB24TD & VB27TD WILL HAVE A FULL WIDTH DRAWER FRONT AND WILL NOT HAVE A MULLION

AH Vanity Base W/4 Tub Drawers

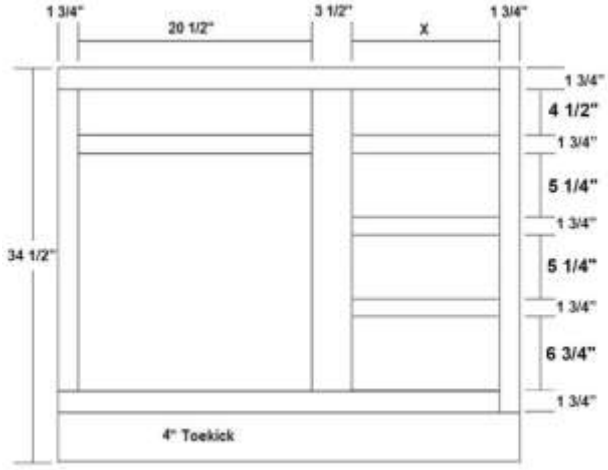

VANITY	DOOR OPEN	DWR OPENING
VB24TD-4-AH	8 1/2	8 1/2
VB27TD-4-AH	13	7
VB30TD-4-AH	14 1/2	8 1/2
VB33TD-4-AH	16	10
VB36TD-4-AH	17 1/2	11 1/2
VB39TD-4-AH	19	13
VB42TD-4-AH	20 1/2	14 1/2
VB45TD-4-AH	22	16
VB48TD-4-AH	23 1/2	17 1/2

VB24TD & VB27TD WILL HAVE A FULL WIDTH DRAWER FRONT AND WILL NOT HAVE A MULLION

TOE KICK IS RECESSED BACK 3"

VANITY DIMENSIONS

Vanity Base W/3 Center Drawers

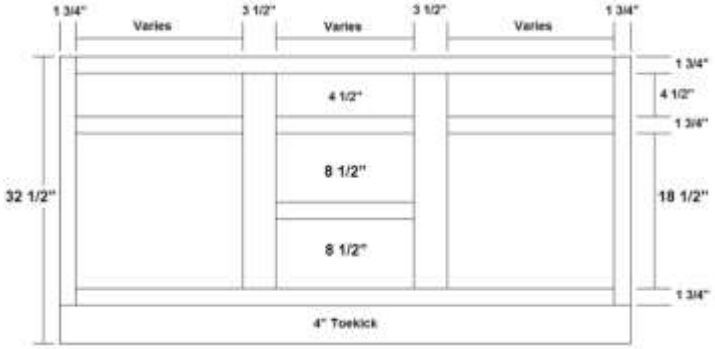

VANITY	DOOR OPEN	DWR OPENING
VB54CD-3	17 1/2	8 1/2
VB57CD-3	17 1/2	11 1/2
VB60CD-3	20 1/2	8 1/2
VB63CD-3	20 1/2	11 1/2
VB66CD-3	20 1/2	14 1/2
VB69CD-3	20 1/2	17 1/2
VB72CD-3	20 1/2	20 1/2

AH Vanity Base W/3 Center Drawers

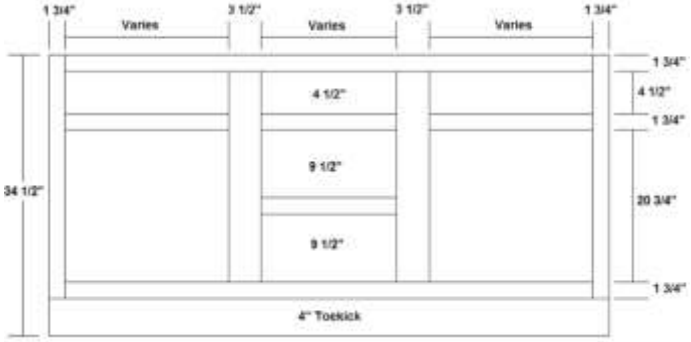

VANITY	DOOR OPEN	DWR OPENING
VB54CD-3-AH	17 1/2	8 1/2
VB57CD-3-AH	17 1/2	11 1/2
VB60CD-3-AH	20 1/2	8 1/2
VB63CD-3-AH	20 1/2	11 1/2
VB66CD-3-AH	20 1/2	14 1/2
VB69CD-3-AH	20 1/2	17 1/2
VB72CD-3-AH	20 1/2	20 1/2

AH Vanity Base W/4 Center Drawers

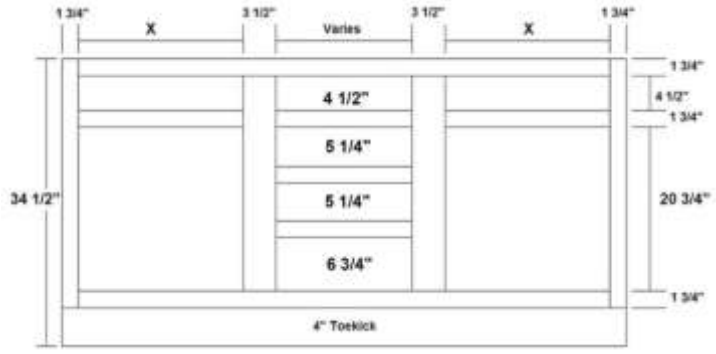

VANITY	DOOR OPEN	DWR OPENING
VB54CD-4-AH	17 1/2	8 1/2
VB57CD-4-AH	17 1/2	11 1/2
VB60CD-4-AH	20 1/2	8 1/2
VB63CD-4-AH	20 1/2	11 1/2
VB66CD-4-AH	20 1/2	14 1/2
VB69CD-4-AH	20 1/2	17 1/2
VB72CD-4-AH	20 1/2	20 1/2

VANITY DIMENSIONS

Vanity Base W/6 Double Drawers - 42" or 45" wide

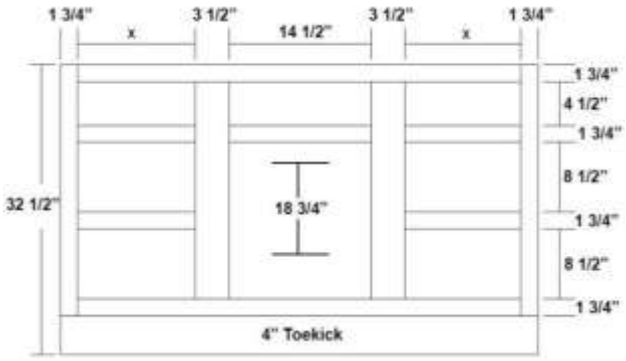

Opening Width Calculation
Cabinet Width: - 25" / 2 = X

Vanity Base W/6 Double Drawers - 48" thru 72" Wide

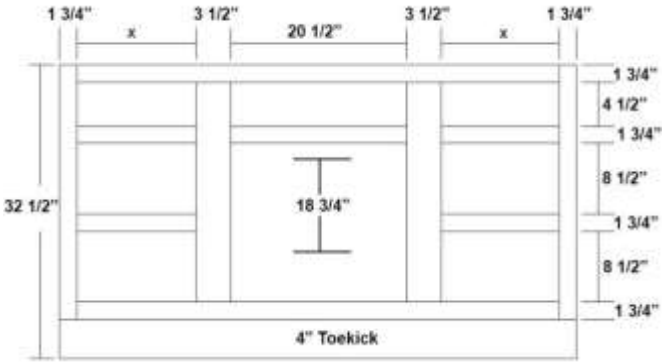

Opening Width Calculation
Cabinet Width: - 31" / 2 = X

AH Vanity Base W/6 Double Drawers - 42" or 45" Wide

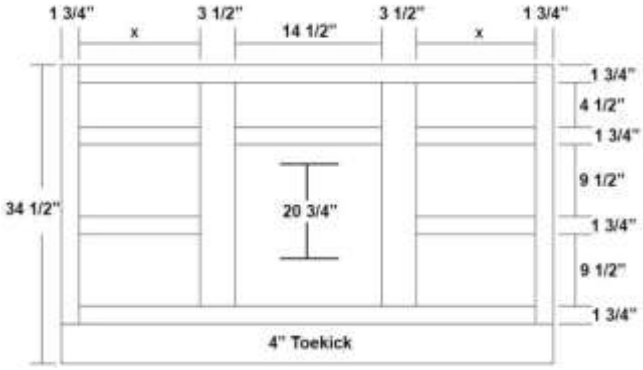

Opening Width Calculation
Cabinet Width: - 25" / 2 = X

AH Vanity Base W/6 Double Drawers - 48" thru 72" Wide

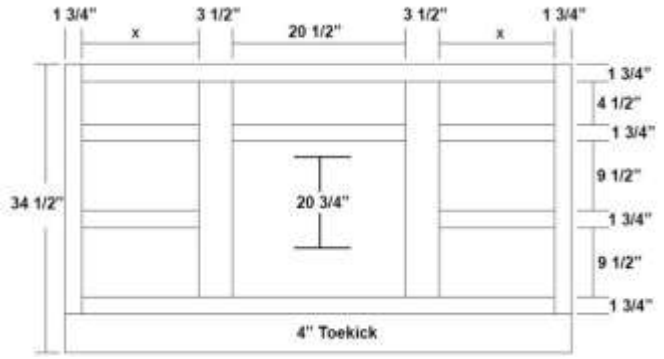

Opening Width Calculation
Cabinet Width: - 31" / 2 = X

AH Vanity Base W/8 Double Drawers - 42" or 45" Wide

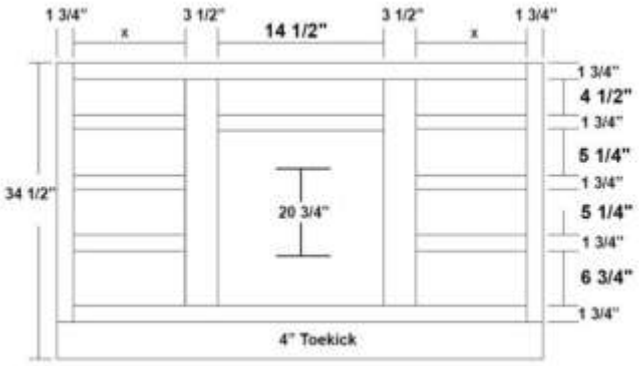

Opening Width Calculation
Cabinet Width: - 25" / 2 = X

AH Vanity Base W/8 Double Drawers - 48" thru 72" Wide

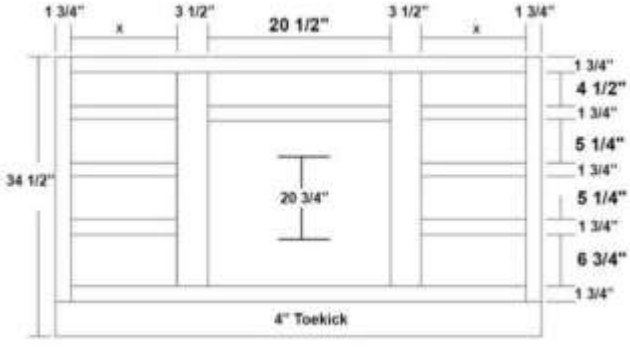

Opening Width Calculation
Cabinet Width: - 31" / 2 = X

TOE KICK IS RECESSED BACK 3"

VANITY DIMENSIONS

Vanity 3 Drawer Base

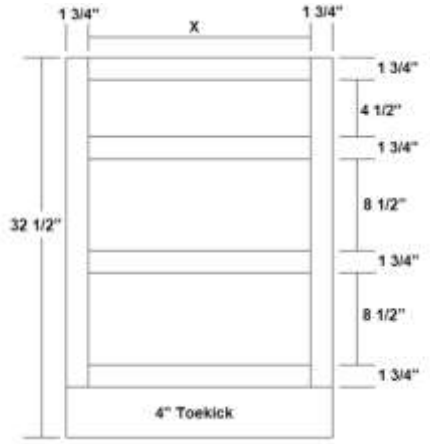

Opening Width Calculation
Cabinet Width - 3.5" = X

AH Vanity 3 Drawer Base

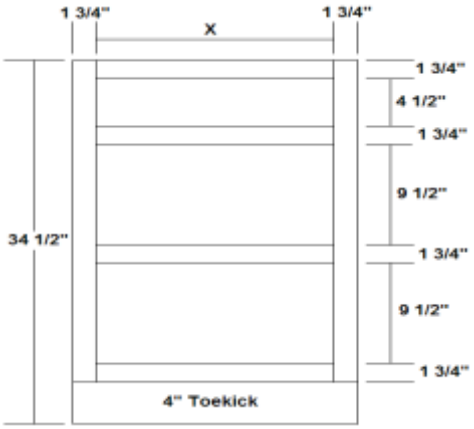

Opening Width Calculation
Cabinet Width - 3.5" = X

AH Vanity 4 Drawer Base

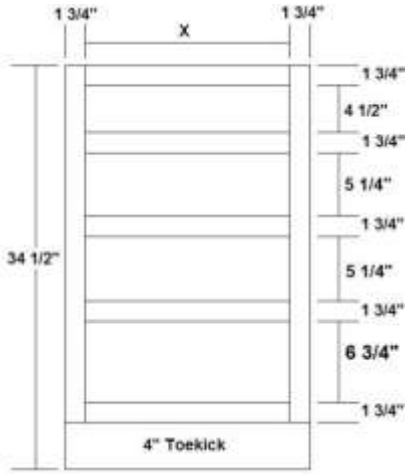

Opening Width Calculation
Cabinet Width: - 3.5" = X

Inverted Sink Base with One Drawer

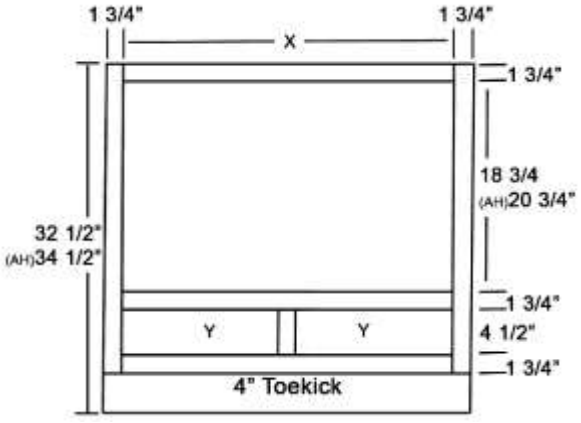

Opening Width Calculation
Cabinet Width - 3.5" = X

Inverted Sink Base with Two Drawers

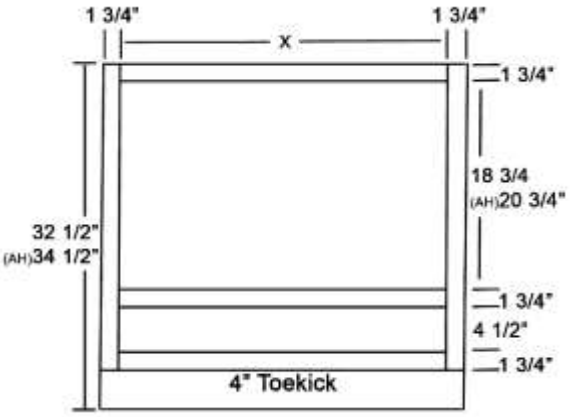

Opening Width Calculation
Cabinet Width - 3.5" = X
Drawer width - 5.25 / 2=Y

TOE KICK IS RECESSED BACK 3"

VANITY DIMENSIONS

VANITY SHELF WILL HAVE 1 1/2" COUNTERTOP EDGE

Vanity Furniture Base W/2 Doors

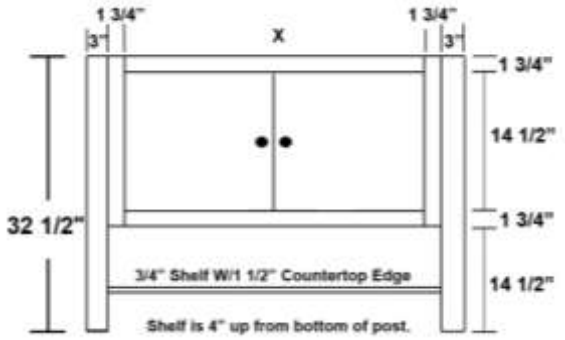

Opening Width Calculation
Cabinet Width: - 9.5" = X

AH Vanity Furniture Base W/2 Doors

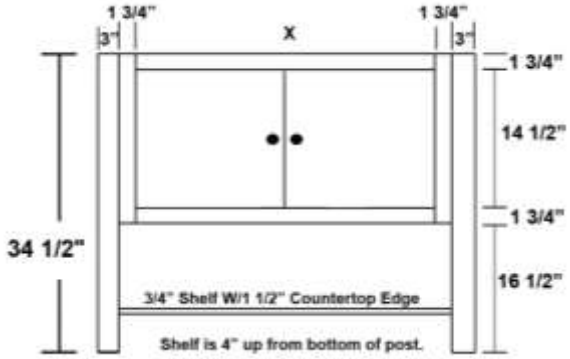

Opening Width Calculation
Cabinet Width: - 9.5" = X

Vanity Furniture Base W/4 Drawers

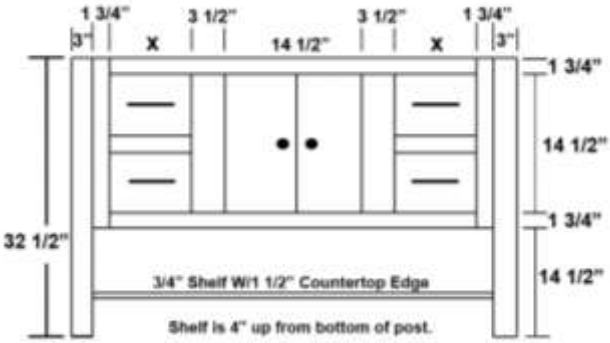

Opening Width Calculation
Cabinet Width: - 31" / 2 = X

AH Vanity Furniture Base W/4 Drawers

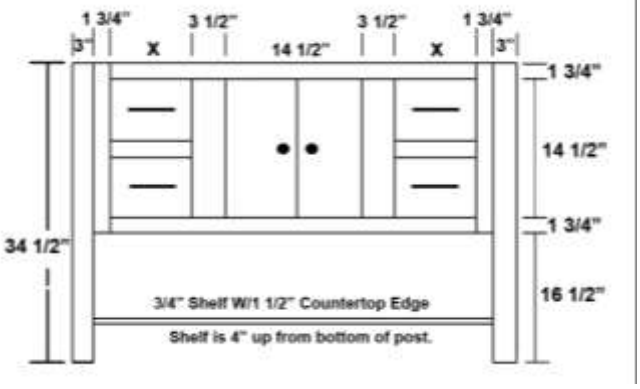

Opening Width Calculation
Cabinet Width: - 31" / 2 = X

Vanity Furniture Base W/2 Doors & 2 Drawers

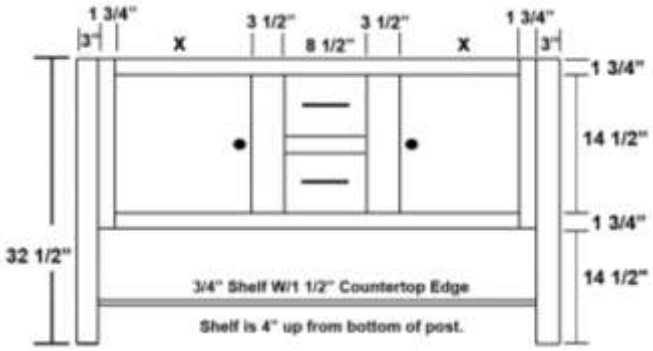

Opening Width Calculation
Cabinet Width: - 25" / 2 = X

AH Vanity Furniture Base W/2 Doors & 2 Drawers

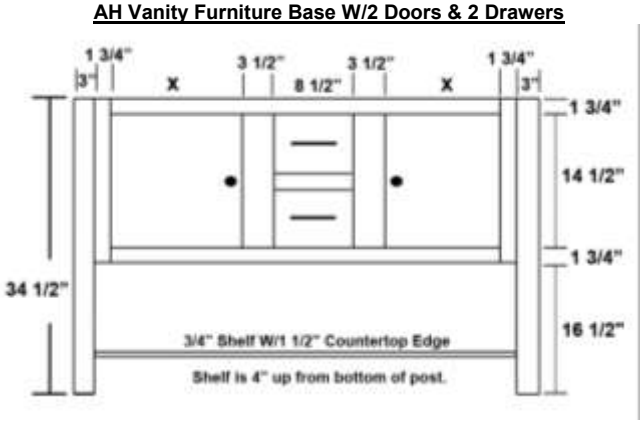

Opening Width Calculation
Cabinet Width: - 25" / 2 = X

SHELF WILL HAVE 1 1/2" SHELF MOLDING ATTATCHED
OVERALL WIDTH OF VANITY FURNITURE BASES INCLUDES POSTS

VANITY CORNER DIMENSIONS

Vanity Diagonal Angle - Top View

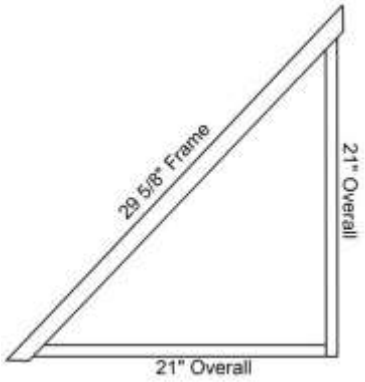

Vanity Angle Transition - Top View

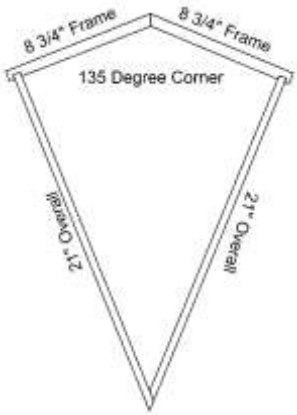

Vanity Base Easy Reach

AH Vanity Base Easy Reach

3/4 DEPTH SHELF IN VBER33. FULL DEPTH SHELF (WITH NOTCH) ON VBER36 & 39

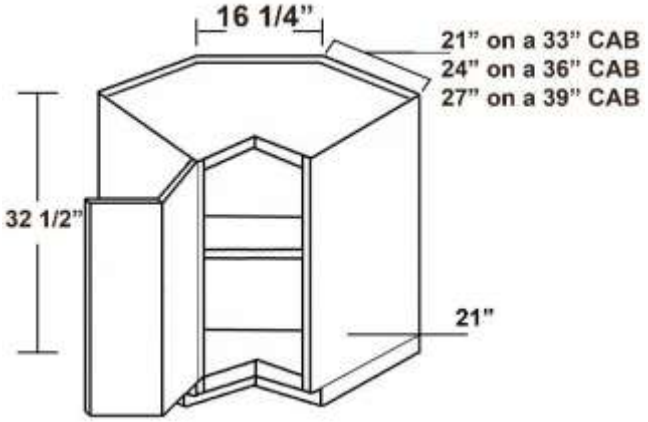

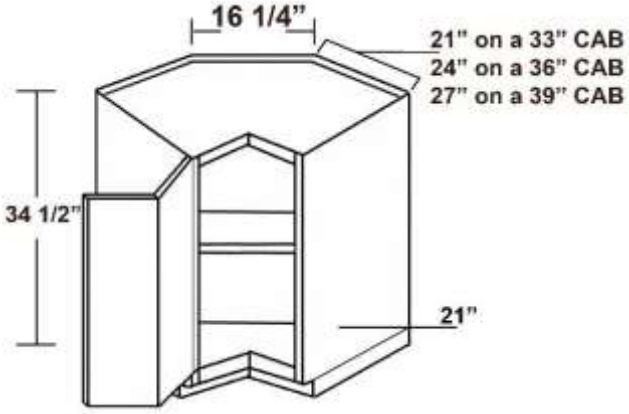

TOE KICK IS RECESSED BACK 3"

Wall Hung Vanity Sink Base with Full Height Doors

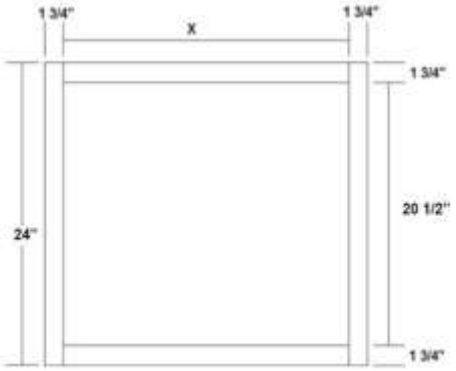

Opening Width Calculation
Cabinet Width: - 3.5" = X

Wall Hung Vanity Base with Two Drawers

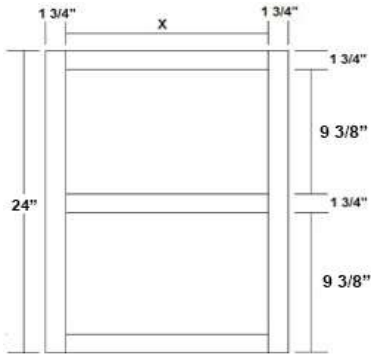

Opening Width Calculation
Cabinet Width: - 3.5" = X

A-Bristol, Prairie, Savannah15
B-Plateau, Ridgegate, Summerhill
C-Augusta15, Bedford, Charleston15, Easton, Fairway, Gateway, Harbor, Hastings15, Liberty, Seneca, Vicksburg

D-Regency
E-
F-
G-Aspen15, Centennial15, Madison15, Norfolk15, Orleans, Riverton

SEE PAGE 54 FOR DOORS AVAILABLE IN MOLDED & PRICING

CABINET TYPE

VANITIES

VANITY BASE - 32 1/2" & 34 1/2" (AH) HEIGHT

ADJUSTABLE 1/2" DEPTH SHELF
FULL WIDTH DRAWER ON 12" THRU 39"
FULL WIDTH FALSE FRONT NOT AVAILABLE 42" THRU 48"
FULL WIDTH DRAWER NOT AVAILABLE ON 42" THRU 48"

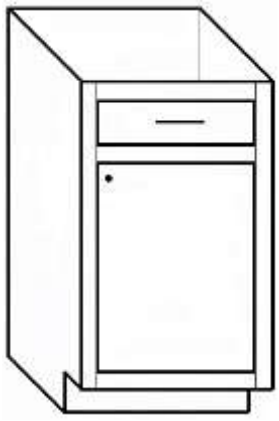

VB12R



VB33-2B

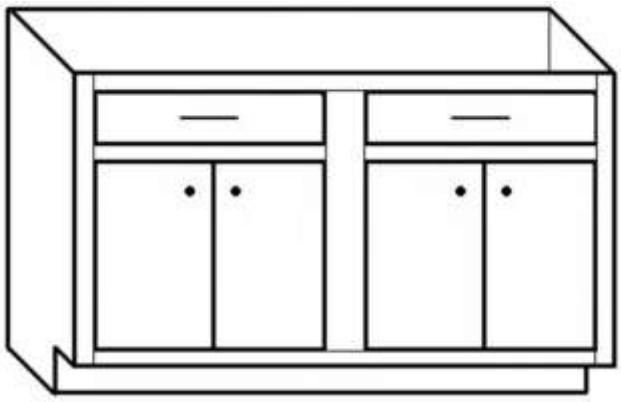

VB48-4B

FOR 18" VANITY USE CODE CR-VU18

21" DEEP CABINET	LIST PRICE						
	A	B	C	D	E	F	G
VB12L	981	996	1062	1062	1083	1098	1191
VB12R	981	996	1062	1062	1083	1098	1191
VB15L	1011	1026	1101	1101	1125	1137	1236
VB15R	1011	1026	1101	1101	1125	1137	1236
VB18L	1044	1059	1143	1143	1164	1182	1284
VB18R	1044	1059	1143	1143	1164	1182	1284
VB21L	1068	1083	1179	1179	1200	1221	1329
VB21R	1068	1083	1179	1179	1200	1221	1329
VB24L	1098	1113	1221	1221	1248	1266	1380
VB24R	1098	1113	1221	1221	1248	1266	1380
VB24-2B	1227	1242	1350	1350	1374	1398	1506
VB27-2B	1350	1383	1506	1506	1554	1566	1710
VB30-2B	1380	1416	1548	1548	1587	1605	1752
VB33-2B	1410	1446	1587	1587	1629	1647	1803
VB36-2B	1434	1470	1623	1623	1671	1692	1848
VB39-2B	1470	1506	1671	1671	1710	1734	1899
VB42-2B	2031	2061	2253	2253	2295	2337	2553
VB45-2B	2061	2091	2283	2283	2325	2367	2583
VB48-4B	2346	2379	2592	2592	2643	2691	2907

AH 21" DEEP CABINET	LIST PRICE						
	A	B	C	D	E	F	G
VB12AHL	1149	1167	1245	1245	1266	1302	1440
VB12AHR	1149	1167	1245	1245	1266	1302	1440
VB15AHL	1179	1200	1287	1287	1305	1338	1479
VB15AHR	1179	1200	1287	1287	1305	1338	1479
VB18AHL	1209	1230	1317	1317	1338	1371	1521
VB18AHR	1209	1230	1317	1317	1338	1371	1521
VB21AHL	1236	1254	1362	1362	1383	1422	1575
VB21AHR	1236	1254	1362	1362	1383	1422	1575
VB24AHL	1266	1287	1407	1407	1449	1470	1626
VB24AHR	1266	1287	1407	1407	1449	1470	1626
VB24AH-2B	1392	1413	1536	1536	1575	1599	1755
VB27AH-2B	1515	1557	1689	1689	1734	1764	1953
VB30AH-2B	1545	1587	1728	1728	1770	1806	1995
VB33AH-2B	1575	1617	1770	1770	1812	1851	2046
VB36AH-2B	1602	1644	1806	1806	1851	1890	2091
VB39AH-2B	1638	1677	1851	1851	1893	1935	2142
VB42AH-2B	2364	2406	2619	2619	2661	2742	3048
VB45AH-2B	2394	2436	2649	2649	2691	2772	3078
VB48AH-4B	2925	3006	3273	3273	3363	3420	3801

A-Bristol, Prairie, Savannah15
B-Plateau, Ridgegate, Summerhill
C-Augusta15, Bedford, Charleston15, Easton, Fairway, Gateway, Harbor, Hastings15, Liberty, Seneca, Vicksburg

D-Regency
E-
F-
G-Aspen15, Centennial15, Madison15, Norfolk15, Orleans, Riverton

SEE PAGE 54 FOR DOORS AVAILABLE IN MOLDED & PRICING

CABINET TYPE

VANITIES

VANITY BASE W/FULL HEIGHT DOORS 32 1/2" TALL AND 34 1/2" (AH) TALL

FULL HEIGHT DOOR
ONE ADJUSTABLE FULL DEPTH SHELF IN VBXXFHD
TWO ADJUSTABLE FULL DEPTH SHELVES IN VBXXFHDAH

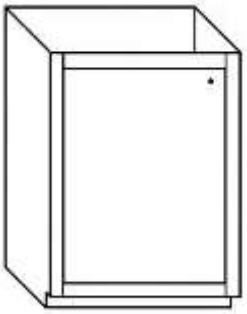

VB24FHDL



VB30FHD-2B

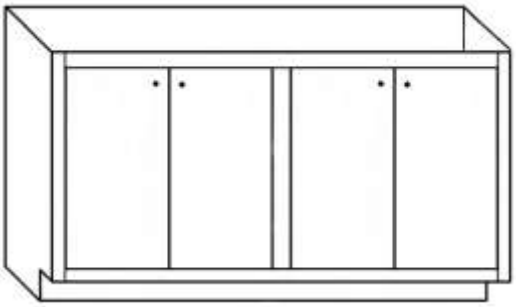

VB48FHD-4B

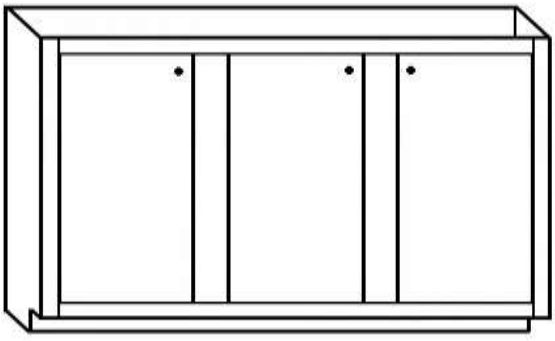

VB51FHDAHL

R OR L INDICATES HINGE SIDE OF MIDDLE DOOR
ON B51" TRHU B60" WIDE CABINET WITH THREE DOORS
OUTSIDE DOORS WILL HINGE TO THE OUTSIDE

FOR 18" VANITY USE CODE CR-VU18

21" DEEP CABINET	LIST PRICE						
	A	B	C	D	E	F	G
VB12FHDL	753	771	843	843	864	876	957
VB12FHDR	753	771	843	843	864	876	957
VB15FHDL	777	792	873	873	894	906	990
VB15FHDR	777	792	873	873	894	906	990
VB18FHDL	798	813	906	906	924	939	1026
VB18FHDR	798	813	906	906	924	939	1026
VB21FHDL	813	828	936	936	960	972	1068
VB21FHDR	813	828	936	936	960	972	1068
VB24FHDL	834	849	972	972	990	1008	1104
VB24FHDR	834	849	972	972	990	1008	1104
VB24FHD-2B	960	975	1098	1098	1119	1140	1230
VB27FHD-2B	1026	1062	1194	1194	1236	1242	1365
VB30FHD-2B	1041	1077	1221	1221	1266	1269	1395
VB33FHD-2B	1068	1104	1263	1263	1302	1311	1440
VB36FHD-2B	1083	1119	1287	1287	1329	1338	1470
VB39FHD-2B	1128	1164	1347	1347	1395	1407	1548
VB42FHD-2B	1155	1191	1389	1389	1431	1443	1587
VB45FHD-2B	1173	1209	1419	1419	1461	1473	1617
VB48FHD-4B	1602	1638	1857	1857	1896	1914	2061
3 DOOR CABINET							
VB51FHDL	1800	1839	2088	2088	2124	2211	2517
VB51FHDR	1800	1839	2088	2088	2124	2211	2517
VB54FHDL	1926	1968	2223	2223	2259	2352	2670
VB54FHDR	1926	1968	2223	2223	2259	2352	2670
VB57FHDL	2055	2094	2355	2355	2394	2490	2829
VB57FHDR	2055	2094	2355	2355	2394	2490	2829
VB60FHDL	2181	2223	2487	2487	2529	2631	2979
VB60FHDR	2181	2223	2487	2487	2529	2631	2979

AH 21" DEEP CABINET	LIST PRICE						
	A	B	C	D	E	F	G
VB12FHDAHL	876	891	975	975	1047	1023	1140
VB12FHDAHR	876	891	975	975	1047	1023	1140
VB15FHDAHL	921	936	1032	1032	1077	1071	1206
VB15FHDAHR	921	936	1032	1032	1077	1071	1206
VB18FHDAHL	963	975	1080	1080	1107	1137	1275
VB18FHDAHR	963	975	1080	1080	1107	1137	1275
VB21FHDAHL	978	999	1116	1116	1137	1176	1311
VB21FHDAHR	978	999	1116	1116	1137	1176	1311
VB24FHDAHL	999	1020	1149	1149	1173	1206	1347
VB24FHDAHR	999	1020	1149	1149	1173	1206	1347
VB24FHDAH-2B	1128	1149	1275	1275	1302	1335	1473
VB27FHDAH-2B	1194	1233	1377	1377	1419	1440	1608
VB30FHDAH-2B	1209	1251	1404	1404	1449	1473	1638
VB33FHDAH-2B	1233	1275	1437	1437	1485	1509	1683
VB36FHDAH-2B	1251	1290	1470	1470	1509	1536	1713
VB39FHDAH-2B	1296	1335	1530	1530	1575	1605	1791
VB42FHDAH-2B	1320	1377	1572	1572	1611	1647	1836
VB45FHDAH-2B	1377	1419	1623	1623	1671	1698	1881
VB48FHDAH-4B	2034	2118	2331	2331	2418	2442	2712
3 DOOR CABINET							
VB51FHDAHL	1950	1989	2238	2238	2274	2361	2667
VB51FHDAHR	1950	1989	2238	2238	2274	2361	2667
VB54FHDAHL	2076	2118	2373	2373	2409	2502	2820
VB54FHDAHR	2076	2118	2373	2373	2409	2502	2820
VB57FHDAHL	2205	2244	2505	2505	2544	2640	2979
VB57FHDAHR	2205	2244	2505	2505	2544	2640	2979
VB60FHDAHL	2331	2373	2637	2637	2679	2781	3129
VB60FHDAHR	2331	2373	2637	2637	2679	2781	3129

A-Bristol, Prairie, Savannah15
B-Plateau, Ridgegate, Summerhill
C-Augusta15, Bedford, Charleston15, Easton, Fairway, Gateway, Harbor, Hastings15, Liberty, Seneca, Vicksburg

D-Regency
E-
F-
G-Aspen15, Centennial15, Madison15, Norfolk15, Orleans, Riverton

SEE PAGE 54 FOR DOORS AVAILABLE IN MOLDED & PRICING

CABINET TYPE

VANITIES

32 1/2" & 34 1/2" (AH) TALL VANITY EASY REACH W/SHELF

3/4 DEPTH SHELF IN VBER33. FULL DEPTH SHELF (WITH NOTCH) ON VBER36 & 39
REMOVABLE TOE KICK

FINISHED END NEEDS TO BE ORDERED FOR ANY EXPOSED END
SEE PG 275 - END IS SENT LOOSE
NOT AVAILABLE WITH SOFT CLOSE HINGES

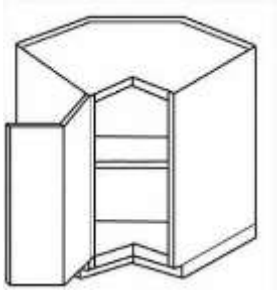

VBER33L

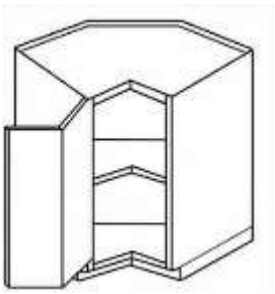

VBER36

21" DEEP CABINET	LIST PRICE						
	A	B	C	D	E	F	G
VBER33L	1677	1692	1890	1890	1908	1989	2232
VBER33R	1677	1692	1890	1890	1908	1989	2232
VBER36L	1710	1743	1917	1917	1965	2022	2265
VBER36R	1710	1743	1917	1917	1965	2022	2265
VBER39L	1785	1821	1998	1998	2040	2106	2358
VBER39R	1785	1821	1998	1998	2040	2106	2358

AH 21" DEEP CABINET	LIST PRICE						
	A	B	C	D	E	F	G
VBER33AHL	1842	1857	2055	2055	2073	2154	2397
VBER33AHR	1842	1857	2055	2055	2073	2154	2397
VBER36AHL	1875	1908	2082	2082	2130	2187	2430
VBER36AHR	1875	1908	2082	2082	2130	2187	2430
VBER39AHL	1950	1986	2163	2163	2205	2271	2523
VBER39AHR	1950	1986	2163	2163	2205	2271	2523

32 1/2" & 34 1/2" (AH) DIAGONAL CORNER VANITY WITH SHELF

3/4 DEPTH SHELF
NEEDS 33", 36", 39", OR 42" WALL SPACE
REMOVABLE TOE KICK
FINISHED END NEEDS TO BE ORDERED FOR EXPOSED END-SENT LOOSE
INTEGRATED ENDS NOT RECOMMENDED - SEE PAGE 277
2 1/4" STILES

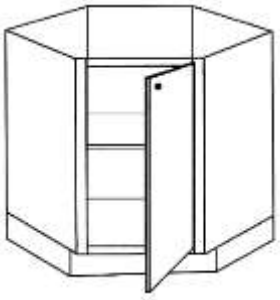

VB33DCL

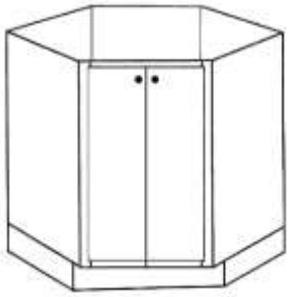

VB39DC-2B

21" DEEP CABINET	LIST PRICE						
	A	B	C	D	E	F	G
VB33DCL	1467	1509	1596	1596	1614	1683	1911
VB33DCR	1467	1509	1596	1596	1614	1683	1911
VB36DCL	1518	1560	1647	1647	1665	1734	1962
VB36DCR	1518	1560	1647	1647	1665	1734	1962
VB39DC-2B	1647	1686	1752	1752	1773	1842	2079
VB42DC-2B	1698	1737	1803	1803	1824	1899	2139

AH 21" DEEP CABINET	LIST PRICE						
	A	B	C	D	E	F	G
VB33DCAHL	1632	1674	1761	1761	1779	1848	2076
VB33DCAHR	1632	1674	1761	1761	1779	1848	2076
VB36DCAHL	1683	1725	1812	1812	1830	1899	2127
VB36DCAHR	1683	1725	1812	1812	1830	1899	2127
VB39DCAH-2B	1812	1851	1917	1917	1938	2007	2244
VB42DCAH-2B	1863	1902	1968	1968	1989	2064	2304

32 1/2" & 34 1/2" (AH) VANITY ANGLE TRANSITION

USED TO FORM A 135 DEGREE CORNER - 2 SHELVES
LEFT DOOR WILL HINGE LEFT AND RIGHT DOOR WILL HINGE RIGHT

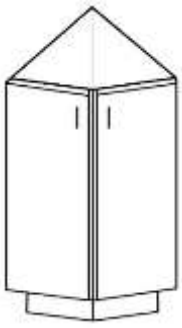

VB21V-135

21" DEEP CABINET	LIST PRICE						
	A	B	C	D	E	F	G
VB21V-135	1368	1410	1659	1659	1791	1713	1893

AH 21" DEEP CABINET	LIST PRICE						
	A	B	C	D	E	F	G
VB21VAH-135	1533	1575	1824	1824	1956	1878	2058

A-Bristol, Prairie, Savannah15
B-Plateau, Ridgegate, Summerhill
C-Augusta15, Bedford, Charleston15, Easton, Fairway, Gateway, Harbor, Hastings15, Liberty, Seneca, Vicksburg

D-Regency
E-
F-
G-Aspen15, Centennial15, Madison15, Norfolk15, Orleans, Riverton

SEE PAGE 54 FOR DOORS AVAILABLE IN MOLDED & PRICING

CABINET TYPE

VANITIES

32 1/2" & 34 1/2" (AH) DIAGONAL ANGLE VANITY

NEEDS 21" OF WALL SPACE
TWO SHELVES - 2 1/2" STILES



VB21DIA-2B

21" DEEP CABINET	LIST PRICE						
	A	B	C	D	E	F	G
VB21DIA-2B	1092	1134	1443	1443	1515	1449	1629

AH 21" DEEP CABINET	LIST PRICE						
	A	B	C	D	E	F	G
VB21DIAAH-2B	1257	1299	1608	1608	1680	1614	1794

VANITY 3 DRAWER BASE
32 1/2" TALL & 34 1/2" (AH) TALL

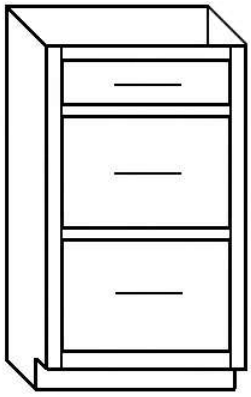

VDB12-3

21" DEEP CABINET	LIST PRICE						
	A	B	C	D	E	F	G
VDB12-3	1452	1452	1452	1452	1452	1452	1452
VDB15-3	1515	1515	1515	1515	1515	1515	1515
VDB18-3	1569	1569	1569	1569	1569	1569	1569
VDB21-3	1626	1626	1626	1626	1626	1626	1626
VDB24-3	1677	1677	1677	1677	1677	1677	1677
VDB27-3	1848	1848	1848	1848	1848	1848	1848
VDB30-3	1947	1947	1947	1947	1947	1947	1947
VDB33-3	2043	2043	2043	2043	2043	2043	2043
VDB36-3	2139	2139	2139	2139	2139	2139	2139

AH 21" DEEP CABINET	LIST PRICE						
	A	B	C	D	E	F	G
VDB12AH-3	1494	1494	1494	1494	1494	1494	1494
VDB15AH-3	1554	1554	1554	1554	1554	1554	1554
VDB18AH-3	1620	1620	1620	1620	1620	1620	1620
VDB21AH-3	1683	1683	1683	1683	1683	1683	1683
VDB24AH-3	1749	1749	1749	1749	1749	1749	1749
VDB27AH-3	2016	2016	2016	2016	2016	2016	2016
VDB30AH-3	2229	2229	2229	2229	2229	2229	2229
VDB33AH-3	2460	2460	2460	2460	2460	2460	2460
VDB36AH-3	2685	2685	2685	2685	2685	2685	2685

34 1/2" TALL VANITY 4 DRAWER BASE

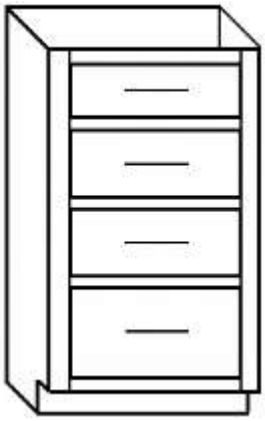

VDB12AH-4

AH 21" DEEP CABINET	LIST PRICE						
	A	B	C	D	E	F	G
VDB12AH-4	1782	1782	1782	1782	1782	1782	1782
VDB15AH-4	1842	1842	1842	1842	1842	1842	1842
VDB18AH-4	1908	1908	1908	1908	1908	1908	1908
VDB21AH-4	1971	1971	1971	1971	1971	1971	1971
VDB24AH-4	2037	2037	2037	2037	2037	2037	2037
VDB27AH-4	2286	2286	2286	2286	2286	2286	2286
VDB30AH-4	2517	2517	2517	2517	2517	2517	2517
VDB33AH-4	2748	2748	2748	2748	2748	2748	2748
VDB36AH-4	2973	2973	2973	2973	2973	2973	2973

A-Bristol, Prairie, Savannah15
B-Plateau, Ridgegate, Summerhill
C-Augusta15, Bedford, Charleston15, Easton, Fairway, Gateway, Harbor, Hastings15, Liberty, Seneca, Vicksburg

D-Regency
E-
F-
G-Aspen15, Centennial15, Madison15, Norfolk15, Orleans, Riverton

SEE PAGE 54 FOR DOORS AVAILABLE IN MOLDED & PRICING

CABINET TYPE — VANITIES

TUB FRONT



1 3/4" MULLIONS, STILES, TOP RAIL, AND A 3 1/2" BOTTOM RAIL
FIXED DOORS - CLIP ON HARDWARE WILL BE USED

PER SQUARE FOOT	LIST PRICE						
	A	*B*	*C*	*D*	*E*	*F*	*G*
TUB FRONT	210	210	261	261	261	261	261

UP TO 24" WIDE - 1 DOOR
OVER 24" WIDE UP TO 48" WIDE - 2 DOORS
OVER 48" WIDE UP TO 72" WIDE - 3 DOORS
OVER 72" WIDE UP TO 96" WIDE - 4 DOORS
MOLDED DOOR CHARGE WILL BE ADDED TO COST IF MOLDED DOOR STYLE IS CHOSEN

WALL HUNG CABINETS - KOCH AND COMPANY IS NOT RESPONSIBLE FOR ANY DAMAGES THAT OCCUR IF THE CABINET FALLS DOWN. WE CAN NOT CONTROL INSTALLATION, OR THE AMOUNT OF WEIGHT THAT IS PLACED IN THE CABINET. WE ARE NOT RESPONSIBLE FOR DETERMINING THE WEIGHT LOADING CAPACITY. LOAD CAPACITY IS SUBJECT TO THE CONSTRUCTION OF THE WALL AND THE INSTALLATION METHOD USED. <u>NO WIDTH INCREASES.</u>

24" TALL VANITY 2 DRAWER WALL HUNG VANITY

2 3/4" TALL HORIZONTAL STRETCHER ACROSS TOP BACK, & BOTTOM BACK

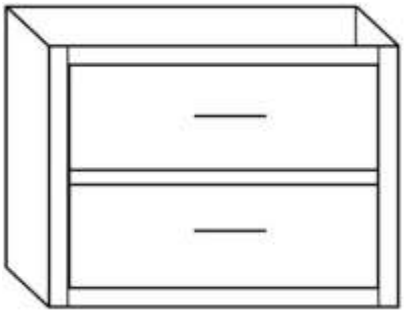

VDB2WH15-2

21" DEEP CABINET	LIST PRICE						
	A	B	C	D	E	F	G
VDBWH12-2	1050	1050	1050	1050	1050	1050	1050
VDBWH15-2	1116	1116	1116	1116	1116	1116	1116
VDBWH18-2	1167	1167	1167	1167	1167	1167	1167

24" TALL VANITY SINK WALL HUNG VANITY

2 3/4" TALL HORIZONTAL STRETCHER ACROSS TOP BACK, & BOTTOM BACK

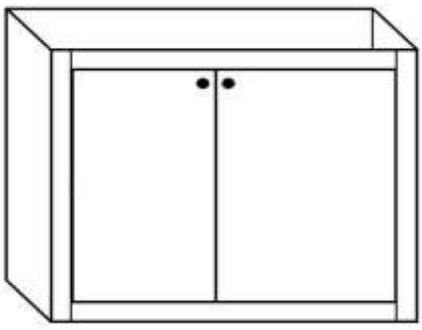

VSBWH24-2B

21" DEEP CABINET	LIST PRICE						
	A	B	C	D	E	F	G
VSBWH24-2B	996	1011	1110	1110	1134	1170	1251
VSBWH27-2B	1062	1098	1215	1215	1263	1299	1389
VSBWH30-2B	1083	1119	1242	1242	1287	1323	1419

A-Bristol, Prairie, Savannah15
B-Plateau, Ridgegate, Summerhill
C-Augusta15, Bedford, Charleston15, Easton, Fairway, Gateway, Harbor, Hastings15, Liberty, Seneca, Vicksburg

D-Regency
E-
F-
G-Aspen15, Centennial15, Madison15, Norfolk15, Orleans, Riverton

SEE PAGE 54 FOR DOORS AVAILABLE IN MOLDED & PRICING

CABINET TYPE

VANITIES

VANITY SINK BASE - 32 1/2" & 34 1/2" (AH) HEIGHT

FULL WIDTH FALSE FRONTS ON 18" THRU 39"
42" & 45" WILL HAVE FALSE BUTT DRAWER FRONTS
FULL WIDTH FALSE FRONT AVAILABLE ON 42" THRU 48"

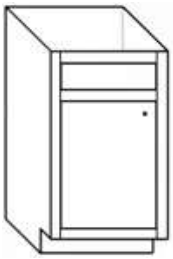

VSB18L



VSB24-2B



VSB42-2B

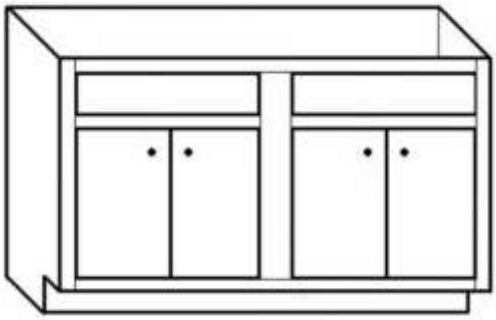

VSB48-4B

21" DEEP CABINET	LIST PRICE						
	A	B	C	D	E	F	G
VSB18L	819	834	915	915	936	972	1041
VSB18R	819	834	915	915	936	972	1041
VSB21L	843	858	951	951	975	1011	1083
VSB21R	843	858	951	951	975	1011	1083
VSB24L	870	885	984	984	1008	1044	1122
VSB24R	870	885	984	984	1008	1044	1122
VSB24-2B	996	1011	1110	1110	1134	1170	1251
VSB27-2B	1062	1098	1215	1215	1263	1299	1389
VSB30-2B	1083	1119	1242	1242	1287	1323	1419
VSB33-2B	1110	1143	1287	1287	1329	1365	1470
VSB36-2B	1134	1170	1314	1314	1353	1389	1500
VSB39-2B	1161	1194	1347	1347	1395	1431	1548
VSB42-2B	1179	1215	1383	1383	1425	1461	1584
VSB45-2B	1200	1236	1410	1410	1455	1491	1608
VSB48-4B	1893	1929	2103	2103	2148	2184	2307

AH 21" DEEP CABINET	LIST PRICE						
	A	B	C	D	E	F	G
VSB18AHL	984	999	1098	1098	1116	1149	1284
VSB18AHR	984	999	1098	1098	1116	1149	1284
VSB21AHL	1011	1026	1131	1131	1158	1191	1332
VSB21AHR	1011	1026	1131	1131	1158	1191	1332
VSB24AHL	1035	1050	1167	1167	1188	1221	1368
VSB24AHR	1035	1050	1167	1167	1188	1221	1368
VSB24AH-2B	1164	1179	1296	1296	1317	1353	1494
VSB27AH-2B	1230	1266	1398	1398	1443	1467	1632
VSB30AH-2B	1251	1284	1428	1428	1470	1494	1662
VSB33AH-2B	1275	1311	1470	1470	1509	1542	1713
VSB36AH-2B	1302	1335	1494	1494	1536	1566	1743
VSB39AH-2B	1326	1362	1530	1530	1575	1605	1791
VSB42AH-2B	1347	1383	1560	1560	1608	1641	1827
VSB45AH-2B	1365	1401	1590	1590	1635	1671	1857
VSB48AH-4B	2061	2097	2289	2289	2331	2382	2556

32 1/2" & 34 1/2" TALL INVERTED VANITY SINK BASE

FULL WIDTH BOTTOM DRAWER ON 24" THRU 39" WIDE
TWO WORKING BOTTOM DRAWERS ON 42", BUTT FRONTS
DRAWER DEPTH IS 21"

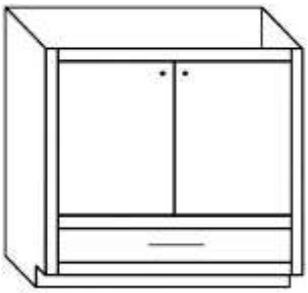

BS39IV-2B

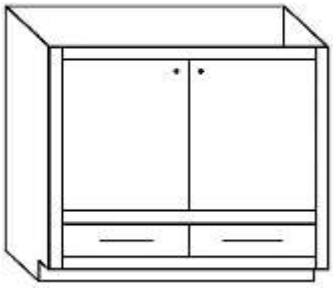

BS42IV-2B

FOR 18" VANITY USE CODE CR-VU18

21" DEEP CABINET	LIST PRICE						
	A	B	C	D	E	F	G
VSB24IV-2B	1689	1725	1923	1923	1965	2016	2256
VSB30IV-2B	1713	1749	1947	1947	1989	2040	2280
VSB33IV-2B	1737	1773	1971	1971	2013	2064	2304
VSB36IV-2B	1761	1797	1995	1995	2037	2088	2328
VSB39IV-2B	1788	1824	2037	2037	2082	2136	2379
VSB42IV-2B	2001	2037	2205	2205	2253	2304	2553

AH 21" DEEP CABINET	LIST PRICE						
	A	B	C	D	E	F	G
VSB24IVAH-2B	1779	1815	2013	2013	2055	2106	2346
VSB30IVAH-2B	1803	1839	2037	2037	2079	2130	2370
VSB33IVAH-2B	1827	1863	2061	2061	2103	2154	2394
VSB36IVAH-2B	1851	1887	2085	2085	2127	2178	2418
VSB39IVAH-2B	1878	1914	2127	2127	2172	2226	2469
VSB42IVAH-2B	2091	2127	2295	2295	2343	2394	2643

A-Bristol, Prairie, Savannah15
B-Plateau, Ridgegate, Summerhill
C-Augusta15, Bedford, Charleston15, Easton, Fairway, Gateway, Harbor, Hastings15, Liberty, Seneca, Vicksburg

D-Regency
E-
F-
G-Aspen15, Centennial15, Madison15, Norfolk15, Orleans, Riverton

SEE PAGE 54 FOR DOORS AVAILABLE IN MOLDED & PRICING

CABINET TYPE

VANITIES

VANITY SINK BASE W/SIDE DRAWERS
32 1/2" & 34 1/2" (AH) HEIGHT

CENTER BOWL WITH TWO SIDE DRAWERS
BUTT DRAWER FRONTS N/A
VB48SP THRU VB69SP HAVE CENTER BUTT DOORS
VB72SP HAS THREE SETS OF BUTT DOORS

5 PIECE FRONT NOT AVAILABLE ON VB36SP OR VB39SP DRAWERS UNLESS IT IS A MITER STYLE DRAWER OR FULL OVERLAY

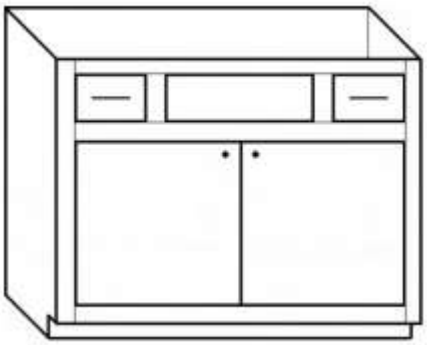

VB36SPAH-2B

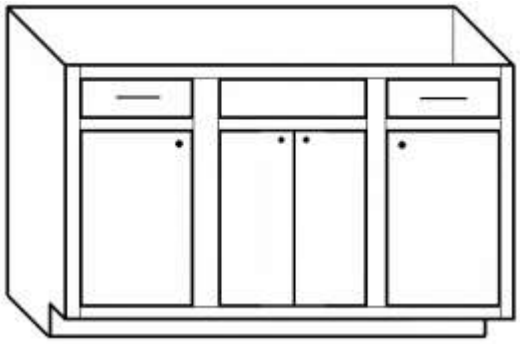

VB48SP thru VB69SP

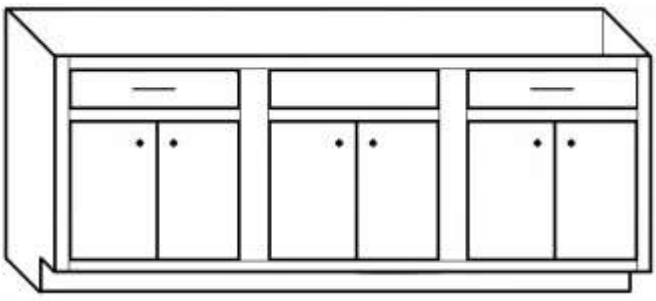

VB72SP-6B

FOR 18" VANITY USE CODE CR-VU18

21" DEEP CABINET	LIST PRICE						
	A	B	C	D	E	F	G
VB36SP-2B	1554	1590	1737	1737	1782	1797	1956
VB39SP-2B	1584	1620	1782	1782	1824	1845	2001
VB42SP-2B	1608	1644	1818	1818	1860	1881	2049
VB45SP-2B	1638	1674	1851	1851	1893	1917	2079
VB48SP	1770	1806	1989	1989	2031	2061	2226
VB51SP	1812	1863	2058	2058	2094	2130	2313
VB54SP	1896	1965	2163	2163	2196	2247	2439
VB57SP	1947	2016	2217	2217	2304	2367	2502
VB60SP	1971	2043	2271	2271	2358	2394	2562
VB63SP	1998	2067	2295	2295	2388	2418	2595
VB66SP	2022	2094	2322	2322	2409	2445	2625
VB69SP	2049	2118	2367	2367	2451	2469	2676
VB72SP-6B	2175	2247	2505	2505	2592	2598	2823

AH 21" DEEP CABINET	LIST PRICE						
	A	B	C	D	E	F	G
VB36SPAH-2B	1719	1755	1917	1917	1977	2001	2199
VB39SPAH-2B	1749	1785	1965	1965	2019	2043	2250
VB42SPAH-2B	1776	1812	2001	2001	2055	2079	2292
VB45SPAH-2B	1806	1842	2034	2034	2088	2112	2325
VB48SPAH	1938	1974	2172	2172	2226	2250	2469
VB51SPAH	1980	2031	2241	2241	2289	2313	2556
VB54SPAH	2061	2133	2346	2346	2391	2415	2682
VB57SPAH	2112	2184	2397	2397	2499	2523	2745
VB60SPAH	2139	2208	2454	2454	2553	2577	2811
VB63SPAH	2163	2235	2478	2478	2583	2607	2841
VB66SPAH	2190	2259	2505	2505	2604	2628	2871
VB69SPAH	2214	2286	2550	2550	2646	2670	2922
VB72SPAH-6B	2343	2412	2688	2688	2787	2811	3072

A-Bristol, Prairie, Savannah15
B-Plateau, Ridgegate, Summerhill
C-Augusta15, Bedford, Charleston15, Easton, Fairway, Gateway, Harbor, Hastings15, Liberty, Seneca, Vicksburg

D-Regency
E-
F-
G-Aspen15, Centennial15, Madison15, Norfolk15, Orleans, Riverton

SEE PAGE 54 FOR DOORS AVAILABLE IN MOLDED & PRICING

CABINET TYPE

VANITIES

VANITY SINK BASE W/3 CENTER DRAWERS 32 1/2" & 34 1/2" (AH) HEIGHT

ALL WORKING CENTER DRAWERS STACK
BUTT DRAWER FRONTS NOT AVAILABLE

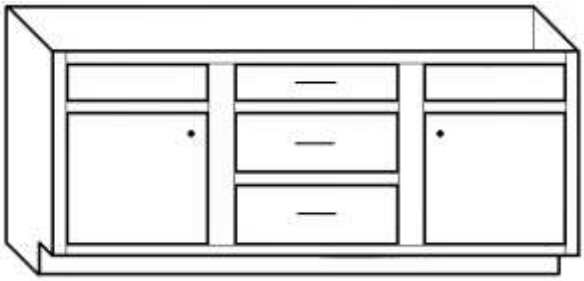

VB57CD-3

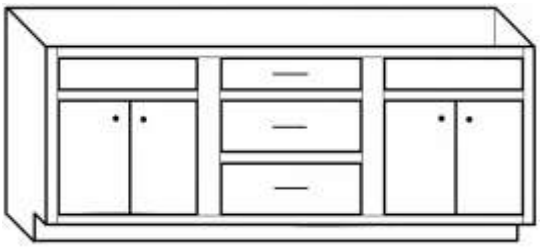

VB69CD-3-4B

21" DEEP CABINET	LIST PRICE						
	A	B	C	D	E	F	G
VB54CD-3	2385	2421	2619	2619	2664	2724	2970
VB57CD-3	2445	2481	2685	2685	2727	2793	3045
VB60CD-3-4B	2610	2646	2844	2844	2889	2952	3216
VB63CD-3-4B	2751	2838	2997	2997	3036	3000	3393
VB66CD-3-4B	2781	2868	3033	3033	3072	3150	3441
VB69CD-3-4B	2832	2919	3087	3087	3129	3204	3501
VB72CD-3-4B	2868	2955	3138	3138	3180	3261	3567

AH 21" DEEP CABINET	LIST PRICE						
	A	B	C	D	E	F	G
VB54CDAH-3	2550	2592	2802	2802	2847	2922	3219
VB57CDAH-3	2613	2652	2868	2868	2907	2988	3291
VB60CDAH-3-4B	2775	2817	3024	3024	3072	3153	3465
VB63CDAH-3-4B	3429	3510	3708	3708	3795	3867	4269
VB66CDAH-3-4B	3459	3540	3750	3750	3831	3909	4311
VB69CDAH-3-4B	3510	3591	3801	3801	3888	3963	4377
VB72CDAH-3-4B	3546	3627	3852	3852	3939	4020	4437

VANITY SINK BASE W/4 CENTER DRAWERS 34 1/2" (AH) HEIGHT

ALL WORKING CENTER DRAWERS STACK
BUTT DRAWER FRONTS NOT AVAILABLE

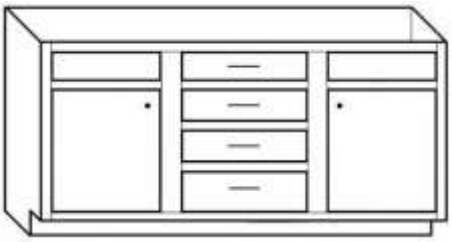

VB57CDAH-4

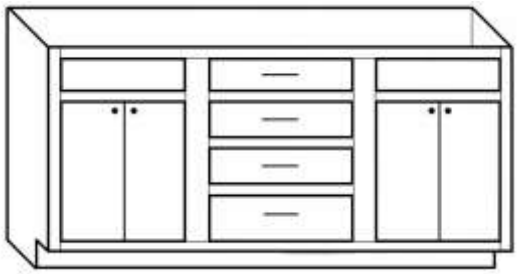

VB60CDAH-4-4B

FOR 18" VANITY USE CODE CR-VU18

AH 21" DEEP CABINET	LIST PRICE						
	A	B	C	D	E	F	G
VB54CDAH-4	3063	3105	3315	3315	3360	3435	3732
VB57CDAH-4	3126	3165	3381	3381	3420	3501	3804
VB60CDAH-4-4B	3288	3330	3537	3537	3582	3666	3978
VB63CDAH-4-4B	3942	4023	4221	4221	4308	4380	4782
VB66CDAH-4-4B	3972	4053	4263	4263	4344	4422	4824
VB69CDAH-4-4B	4023	4104	4314	4314	4401	4476	4890
VB72CDAH-4-4B	4059	4140	4365	4365	4452	4533	4950

A-Bristol, Prairie, Savannah15
B-Plateau, Ridgegate, Summerhill
C-Augusta15, Bedford, Charleston15, Easton, Fairway, Gateway, Harbor, Hastings15, Liberty, Seneca, Vicksburg

D-Regency
E-
F-
G-Aspen15, Centennial15, Madison15, Norfolk15, Orleans, Riverton

SEE PAGE 54 FOR DOORS AVAILABLE IN MOLDED & PRICING

CABINET TYPE

VANITIES

VANITY SINK BASE W/2 OPERATING TUB DRAWERS 32 1/2" & 34 1/2" (AH) HEIGHT

VB24 & 27 N/A WITH WORKING TOP DRAWER
VB24 & 27 HAVE A FULL WIDTH FALSE FRONT
BUTT DRAWER FRONTS N/A
TDL = DRAWERS LEFT AND SINGLE DOOR HINGED RIGHT
TDR = DRAWERS RIGHT AND SINGLE DOOR HINGED LEFT

SEE PAGE **346** FOR DRAWER OPTIONS

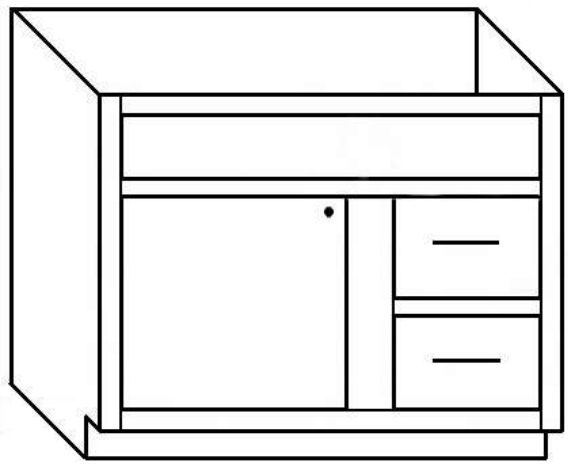

VB27TDR-3

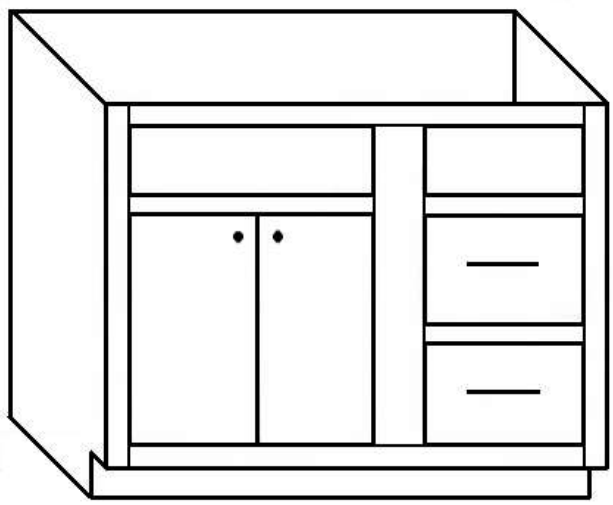

VB36TDRAH-3-2B

FOR 18" VANITY USE CODE CR-VU18

21" DEEP CABINET	LIST PRICE						
	A	B	C	D	E	F	G
VB24TDR-3	1563	1578	1797	1797	1830	1872	2166
VB24TDL-3	1563	1578	1797	1797	1830	1872	2166
VB27TDR-3	1593	1608	1839	1839	1863	1905	2199
VB27TDL-3	1593	1608	1839	1839	1863	1905	2199
VB30TDR-3	1665	1716	1878	1878	1938	1980	2274
VB30TDL-3	1665	1716	1878	1878	1938	1980	2274
VB33TDR-3	1716	1767	1905	1905	1974	2016	2310
VB33TDL-3	1716	1767	1905	1905	1974	2016	2310
VB36TDR-3	1767	1818	1929	1929	2046	2088	2382
VB36TDL-3	1767	1818	1929	1929	2046	2088	2382
VB36TDR-3-2B	1869	1920	2037	2037	2148	2190	2484
VB36TDL-3-2B	1869	1920	2037	2037	2148	2190	2484
VB39TDR-3	1797	1848	1962	1962	2070	2112	2406
VB39TDL-3	1797	1848	1962	1962	2070	2112	2406
VB39TDR-3-2B	1920	1971	2064	2064	2178	2220	2514
VB39TDL-3-2B	1920	1971	2064	2064	2178	2220	2514
VB42TDR-3	1845	1896	1986	1986	2097	2139	2433
VB42TDL-3	1845	1896	1986	1986	2097	2139	2433
VB42TDR-3-2B	1947	1998	2088	2088	2202	2244	2538
VB42TDL-3-2B	1947	1998	2088	2088	2202	2244	2538
VB45TDR-3-2B	1971	2022	2064	2064	2178	2220	2514
VB45TDL-3-2B	1971	2022	2064	2064	2178	2220	2514
VB48TDR-3-2B	1998	2049	2088	2088	2202	2244	2538
VB48TDL-3-2B	1998	2049	2088	2088	2202	2244	2538

AH 21" DEEP CABINET	LIST PRICE						
	A	B	C	D	E	F	G
VB24TDRAH-3	1731	1746	1980	1980	1995	2172	2346
VB24TDLAH-3	1731	1746	1980	1980	1995	2172	2346
VB27TDRAH-3	1761	1776	2016	2016	2037	2196	2424
VB27TDLAH-3	1761	1776	2016	2016	2037	2196	2424
VB30TDRAH-3	1833	1884	2061	2061	2112	2217	2448
VB30TDLAH-3	1833	1884	2061	2061	2112	2217	2448
VB33TDRAH-3	1884	1935	2088	2088	2139	2286	2526
VB33TDLAH-3	1884	1935	2088	2088	2139	2286	2526
VB36TDRAH-3	1935	1986	2112	2112	2169	2364	2613
VB36TDLAH-3	1935	1986	2112	2112	2169	2364	2613
VB36TDRAH-3-2B	2316	2367	2508	2508	2559	2613	2748
VB36TDLAH-3-2B	2316	2367	2508	2508	2559	2613	2748
VB39TDRAH-3	1986	2037	2139	2139	2193	2391	2643
VB39TDLAH-3	1986	2037	2139	2139	2193	2391	2643
VB39TDRAH-3-2B	2367	2418	2535	2535	2589	2643	2790
VB39TDLAH-3-2B	2367	2418	2535	2535	2589	2643	2790
VB42TDRAH-3	2010	2061	2169	2169	2220	2274	2673
VB42TDLAH-3	2010	2061	2169	2169	2220	2274	2673
VB42TDRAH-3-2B	2391	2442	2559	2559	2616	2670	2820
VB42TDLAH-3-2B	2391	2442	2559	2559	2616	2670	2820
VB45TDRAH-3-2B	2424	2475	2592	2592	2649	2703	2853
VB45TDLAH-3-2B	2424	2475	2592	2592	2649	2703	2853
VB48TDRAH-3-2B	2457	2508	2625	2625	2682	2736	2886
VB48TDLAH-3-2B	2457	2508	2625	2625	2682	2736	2886

A-Bristol, Prairie, Savannah15
B-Plateau, Ridgegate, Summerhill
C-Augusta15, Bedford, Charleston15, Easton, Fairway, Gateway, Harbor, Hastings15, Liberty, Seneca, Vicksburg
D-Regency
E-
F-
G-Aspen15, Centennial15, Madison15, Norfolk15, Orleans, Riverton

SEE PAGE 54 FOR DOORS AVAILABLE IN MOLDED & PRICING

CABINET TYPE — VANITIES

VANITY SINK BASE W/3 OPERATING TUB DRAWERS 34 1/2" (AH) HEIGHT

VB24 & 27 N/A WITH WORKING TOP DRAWER
VB24 & 27 HAVE A FULL WIDTH FALSE FRONT
BUTT DRAWER FRONTS N/A
TDR = DRAWERS RIGHT AND SINGLE DOOR HINGED LEFT
TDL = DRAWERS LEFT AND SINGLE DOOR HINGED RIGHT

SEE PAGE **346** FOR DRAWER OPTIONS

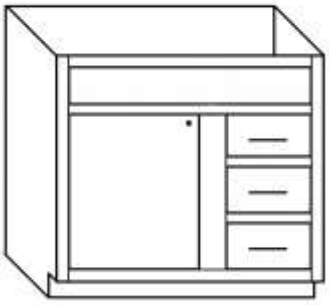

VB27TDRAH-4

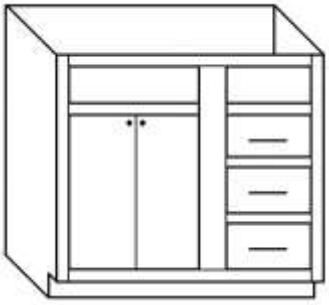

VB36TDRAH-4-2B

AH 21" DEEP CABINET	LIST PRICE						
	A	B	C	D	E	F	G
VB24TDRAH-4	2244	2259	2493	2493	2508	2640	2772
VB24TDLAH-4	2244	2259	2493	2493	2508	2640	2772
VB27TDRAH-4	2274	2289	2529	2529	2550	2682	2814
VB27TDLAH-4	2274	2289	2529	2529	2550	2682	2814
VB30TDRAH-4	2346	2397	2574	2574	2625	2757	2889
VB30TDLAH-4	2346	2397	2574	2574	2625	2757	2889
VB33TDRAH-4	2397	2448	2601	2601	2652	2784	2916
VB33TDLAH-4	2397	2448	2601	2601	2652	2784	2916
VB36TDRAH-4	2448	2499	2625	2625	2682	2814	2946
VB36TDLAH-4	2448	2499	2625	2625	2682	2814	2946
VB36TDRAH-4-2B	2829	2880	3021	3021	3072	3204	3336
VB36TDLAH-4-2B	2829	2880	3021	3021	3072	3204	3336
VB39TDRAH-4	2499	2550	2652	2652	2706	2838	2970
VB39TDLAH-4	2499	2550	2652	2652	2706	2838	2970
VB39TDRAH-4-2B	2880	2931	3048	3048	3102	3234	3366
VB39TDLAH-4-2B	2880	2931	3048	3048	3102	3234	3366
VB42TDRAH-4	2523	2574	2682	2682	2733	2865	2997
VB42TDLAH-4	2523	2574	2682	2682	2733	2865	2997
VB42TDRAH-4-2B	2931	2982	3099	3099	3153	3285	3417
VB42TDLAH-4-2B	2931	2982	3099	3099	3153	3285	3417
VB45TDRAH-4-2B	2982	3033	3150	3150	3204	3336	3468
VB45TDLAH-4-2B	2982	3033	3150	3150	3204	3336	3468
VB48TDRAH-4-2B	3033	3084	3201	3201	3255	3387	3519
VB48TDLAH-4-2B	3033	3084	3201	3201	3255	3387	3519

32 1/2" & 34 1/2" (AH) TALL CORNER VANITY SINK BASE

CORNER SINK CABINET 24" x 24"
7 1/2" SIDES - 2 1/4" STILES
ONE DOOR AND ONE FALSE FRONT
INTEGRATED ENDS NOT RECOMMENDED

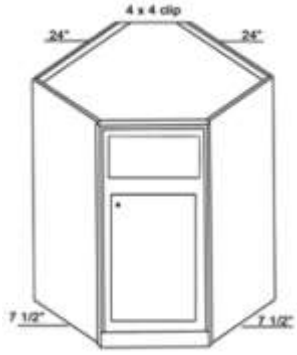

FOR 18" VANITY USE CODE CR-VU18

24" DEEP CABINET	LIST PRICE						
	A	B	C	D	E	F	G
VSB24CORL	1209	1230	1368	1368	1449	1521	1587
VSB24CORR	1209	1230	1368	1368	1449	1521	1587

AH 24" DEEP CABINET	LIST PRICE						
	A	B	C	D	E	F	G
VSB24CORAHL	1344	1365	1503	1503	1584	1656	1722
VSB24CORAHR	1344	1365	1503	1503	1584	1656	1722

A-Bristol, Prairie, Savannah15
B-Plateau, Ridgegate, Summerhill
C-Augusta15, Bedford, Charleston15, Easton, Fairway, Gateway, Harbor, Hastings15, Liberty, Seneca, Vicksburg

D-Regency
E-
F-
G-Aspen15, Centennial15, Madison15, Norfolk15, Orleans, Riverton

SEE PAGE 54 FOR DOORS AVAILABLE IN MOLDED & PRICING

CABINET TYPE

VANITIES

VANITY SINK BASE W/6 DOUBLE DRAWERS
32 1/2" & 34 1/2" (AH) HEIGHT

ALL WORKING DRAWERS STACK ON BOTH ENDS
BUTT DRAWER FRONTS N/A
BUTT DOORS STANDARD

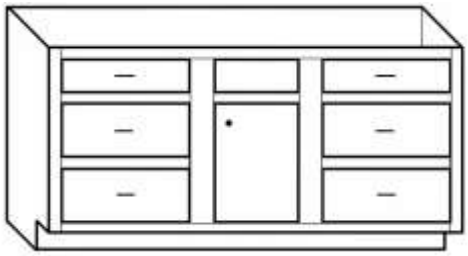

VB42DD-6R

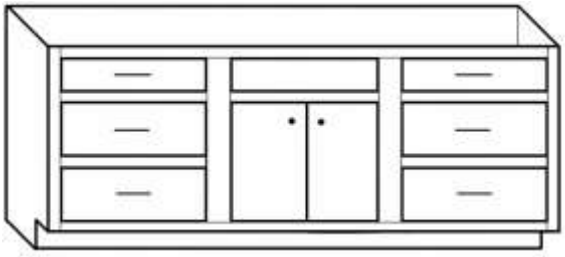

VB69DD-6-2B

21" DEEP CABINET	LIST PRICE						
	A	B	C	D	E	F	G
VB42DD-6L	2793	2829	2958	2958	2997	3057	3324
VB42DD-6R	2793	2829	2958	2958	2997	3057	3324
VB45DD-6L	2814	2850	2979	2979	3018	3078	3384
VB45DD-6R	2814	2850	2979	2979	3018	3078	3384
VB48DD-6-2B	2889	2925	3054	3054	3093	3153	3405
VB51DD-6-2B	2952	2988	3114	3114	3162	3216	3483
VB54DD-6-2B	3012	3048	3180	3180	3222	3285	3558
VB57DD-6-2B	3099	3135	3273	3273	3315	3384	3666
VB60DD-6-2B	3186	3222	3360	3360	3405	3474	3768
VB63DD-6-2B	3237	3273	3405	3405	3447	3522	3819
VB66DD-6-2B	3288	3324	3462	3462	3507	3582	3891
VB69DD-6-2B	3345	3381	3534	3534	3570	3657	3972
VB72DD-6-2B	3399	3435	3594	3594	3636	3720	4047

AH 21" DEEP CABINET	LIST PRICE						
	A	B	C	D	E	F	G
VB42DDAH-6L	2931	2997	3138	3138	3180	3255	3522
VB42DDAH-6R	2931	2997	3138	3138	3180	3255	3522
VB45DDAH-6L	2952	3018	3159	3159	3201	3276	3543
VB45DDAH-6R	2952	3018	3159	3159	3201	3276	3543
VB48DDAH-6-2B	3057	3093	3234	3234	3276	3351	3648
VB51DDAH-6-2B	3117	3153	3297	3297	3336	3420	3726
VB54DDAH-6-2B	3180	3216	3363	3363	3405	3486	3801
VB57DDAH-6-2B	3267	3303	3450	3450	3495	3582	3909
VB60DDAH-6-2B	3354	3387	3540	3540	3588	3675	4017
VB63DDAH-6-2B	3405	3438	3588	3588	3627	3723	4068
VB66DDAH-6-2B	3456	3489	3642	3642	3684	3780	4134
VB69DDAH-6-2B	3510	3546	3714	3714	3756	3855	4215
VB72DDAH-6-2B	3567	3603	3777	3777	3816	3924	4290

VANITY SINK BASE W/8 DOUBLE DRAWERS
34 1/2" (AH) HEIGHT

ALL WORKING DRAWERS STACK ON BOTH ENDS
BUTT DRAWER FRONTS N/A
BUTT DOORS STANDARD

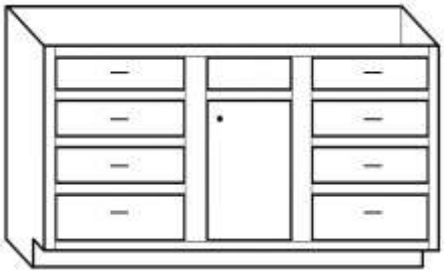

VB42DDAH-8R

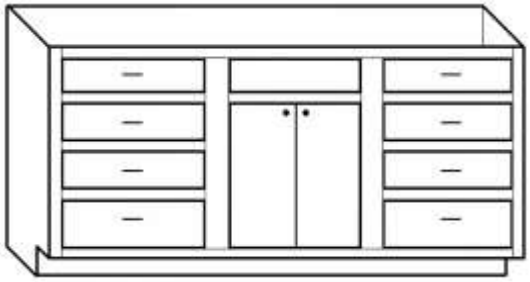

VB48DDAH-8-2B

FOR 18" VANITY USE CODE CR-VU18

AH 21" DEEP CABINET	LIST PRICE						
	A	B	C	D	E	F	G
VB42DDAH-8L	3582	3648	3789	3789	3831	3876	4173
VB42DDAH-8R	3582	3648	3789	3789	3831	3876	4173
VB45DDAH-8L	3603	3669	3810	3810	3852	3897	4194
VB45DDAH-8R	3603	3669	3810	3810	3852	3897	4194
VB48DDAH-8-2B	3708	3744	3885	3885	3927	4002	4299
VB51DDAH-8-2B	3768	3804	3948	3948	3987	4071	4377
VB54DDAH-8-2B	3831	3867	4014	4014	4056	4137	4452
VB57DDAH-8-2B	3867	3954	4101	4101	4146	4233	4560
VB60DDAH-8-2B	4005	4038	4191	4191	4239	4296	4668
VB63DDAH-8-2B	4056	4089	4239	4239	4278	4374	4719
VB66DDAH-8-2B	4107	4140	4293	4293	4335	4431	4785
VB69DDAH-8-2B	4161	4197	4365	4365	4407	4506	4866
VB72DDAH-8-2B	4218	4254	4428	4428	4467	4575	4941

SEE PAGE 54 FOR DOORS AVAILABLE IN MOLDED & PRICING

CABINET TYPE

VANITIES

32 1/2" & 34 1/2" (AH) TALL FURNITURE VANITY W/2 DRS

ONE 3/4" SHELF - WITH 1 1/2" COUNTER TOP EDGING
FULL HEIGHT DOORS - WILL HAVE FINISHED ENDS
NO MODS ON LEGS

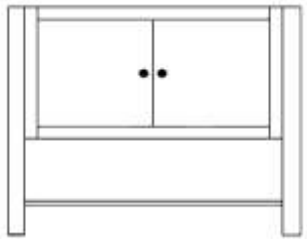

VB36FHDFUR-2B

OVERALL WIDTH INCLUDES POST
THIS CABINET MAY REQUIRE A LONGER LEAD TIME

21" DEEP CABINET	LIST PRICE						
	A	B	C	D	E	F	G
VB36FHDFUR-2B	4656	4704	4899	4899	5064	5079	5517
VB42FHDFUR-2B	5145	5193	5388	5388	5553	5568	6006

AH 21" DEEP CABINET	LIST PRICE						
	A	B	C	D	E	F	G
VB36FHDFURAH-2B	4821	4869	5064	5064	5229	5244	5682
VB42FHDFURAH-2B	5310	5358	5553	5553	5718	5733	6171

32 1/2" & 34 1/2" (AH) TALL FURNITURE VANITY W/4DWRS 2 DRS

4 DRAWERS - FULL HEIGHT DOORS W/ONE 3/4" SHELF
WITH 1 1/2" COUNTER TOP EDGING - WILL HAVE FINISHED ENDS
NO MODS ON LEGS



VB48FURAH-DDWR2B
DRAWERS ARE 6 3/8" TALL OVERALL WIDTH INCLUDES POST
THIS CABINET MAY REQUIRE A LONGER LEAD TIME

21" DEEP CABINET	LIST PRICE						
	A	B	C	D	E	F	G
VB48FUR-DDWR-2B	6186	6234	6429	6429	6594	6609	7047
VB51FUR-DDWR-2B	6675	6723	6918	6918	7083	7098	7536
VB54FUR-DDWR-2B	7161	7212	7404	7404	7569	7584	8022
VB57FUR-DDWR-2B	7650	7701	7893	7893	8058	8073	8511
VB60FUR-DDWR-2B	8139	8190	8382	8382	8547	8562	9000

AH 21" DEEP CABINET	LIST PRICE						
	A	B	C	D	E	F	G
VB48FURAH-DDWR2B	6351	6399	6594	6594	6759	6774	7212
VB51FURAH-DDWR2B	6840	6888	7083	7083	7248	7263	7701
VB54FURAH-DDWR2B	7326	7374	7569	7569	7734	7749	8187
VB57FURAH-DDWR2B	7812	7860	8055	8055	8220	8235	8673
VB60FURAH-DDWR2B	8298	8346	8541	8541	8706	8721	9159

32 1/2" & 34 1/2" (AH) TALL FURNITURE VANITY W/2DWRS 2 DRS

2 DRAWERS - FULL HEIGHT DOORS W/ONE 3/4" SHELF
WITH 1 1/2" COUNTER TOP EDGING - WILL HAVE FINISHED ENDS
NO MODS ON LEGS

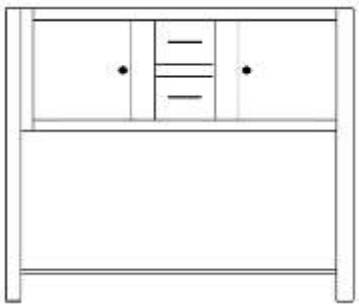

VB57FUR-CDWR
DRAWERS ARE 6 3/8" TALL
OVERALL WIDTH INCLUDES POST
THIS CABINET MAY REQUIRE A LONGER LEAD TIME

FOR 18" VANITY USE CODE CR-VU18

21" DEEP CABINET	LIST PRICE						
	A	B	C	D	E	F	G
VB57FUR-CDWR	7374	7512	7617	7617	7782	7797	8235
VB60FUR-CDWR	7863	8001	8106	8106	8271	8286	8724
VB63FUR-CDWR	8352	8490	8595	8595	8760	8775	9213
VB66FUR-CDWR	8841	8979	9084	9084	9249	9264	9702

AH 21" DEEP CABINET	LIST PRICE						
	A	B	C	D	E	F	G
VB57FURAH-CDWR	7539	7677	7782	7782	7947	7962	8400
VB60FURAH-CDWR	8028	8166	8271	8271	8436	8451	8889
VB63FURAH-CDWR	8517	8655	8760	8760	8925	8940	9378
VB66FURAH-CDWR	9006	9144	9249	9249	9414	9429	9867

SEE PAGE 54 FOR DOORS AVAILABLE IN MOLDED & PRICING

CABINET TYPE — VANITIES

23" TALL & 32 1/2" TALL HANDICAP WALL MOUNT ADA SINKS

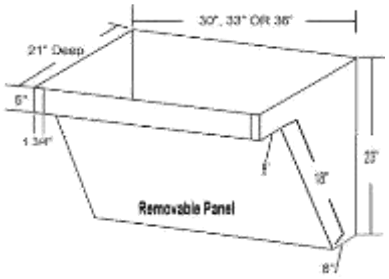

VSB-HC30

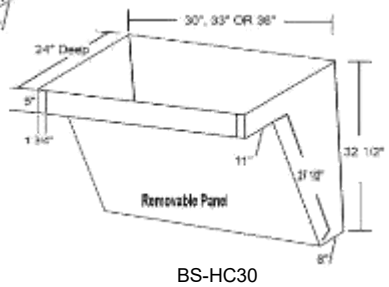

BS-HC30

SOLID FRAME FRONT
NO DRAWER FRONT ATTACHED
FINISHED INTERIOR & FINISHED SIDES (NO NEED TO APPLY FINISHED END)
FRONT PANEL IS REMOVABLE FOR ACCESS TO PLUMBING

21" DEEP CABINET	LIST PRICE						
	A	*B*	*C*	*D*	*E*	*F*	*G*
VSB-HC30	1350	1350	1350	1350	1350	1350	1350
VSB-HC33	1425	1425	1425	1425	1425	1425	1425
VSB-HC36	1500	1500	1500	1500	1500	1500	1500

24" DEEP CABINET	LIST PRICE						
	A	*B*	*C*	*D*	*E*	*F*	*G*
BS-HC30	1650	1650	1650	1650	1650	1650	1650
BS-HC33	1725	1725	1725	1725	1725	1725	1725
BS-HC36	1800	1800	1800	1800	1800	1800	1800

32 1/2" TALL CABINET WITH HANDICAP WALL MOUNT ADA SINK

ONLY AVAILABLE ON MULTI UNIT PROJECTS

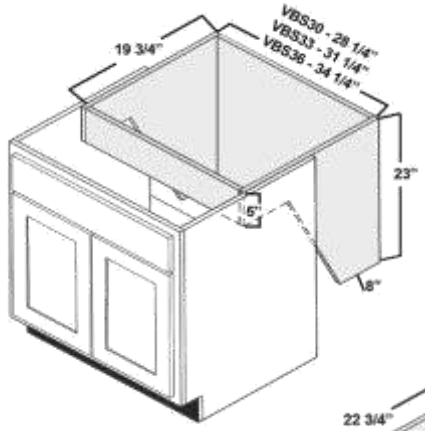

VSB-HC30-COMBO

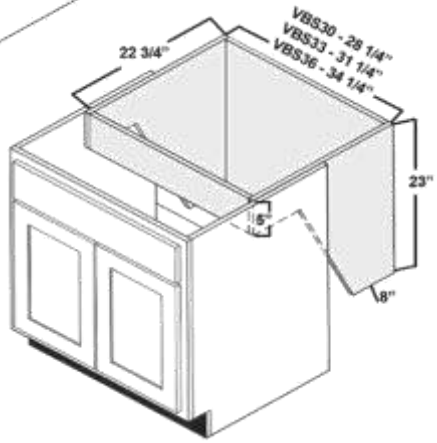

BS-HC30-COMBO

SHIPS AS TWO SEPARATE CABINETS
INCLUDES CABINET AND HANDICAP WALL UNIT

21" DEEP CABINET	LIST PRICE						
	A	*B*	*C*	*D*	*E*	*F*	*G*
VSB-HC30-COMBO	3612	3645	3795	3795	3840	3861	4020
VSB-HC33-COMBO	3699	3735	3897	3897	3939	4020	4128
VSB-HC36-COMBO	3783	3819	3993	3993	4035	4059	4233

24" DEEP CABINET	LIST PRICE						
	A	*B*	*C*	*D*	*E*	*F*	*G*
BS-HC30-COMBO	3663	3699	3822	3822	3867	3903	3999
BS-HC33-COMBO	3750	3783	3927	3927	3969	4005	4110
BS-HC36-COMBO	3834	3870	4014	4014	4053	4089	4200

A-Bristol, Prairie, Savannah15
B-Plateau, Ridgegate, Summerhill
C-Augusta15, Bedford, Charleston15, Easton, Fairway, Gateway, Harbor, Hastings15, Liberty, Seneca, Vicksburg

D-Regency
E-
F-
G-Aspen15, Centennial15, Madison15, Norfolk15, Orleans, Riverton

SEE PAGE 54 FOR DOORS AVAILABLE IN MOLDED & PRICING

CABINET TYPE

VANITIES

34 1/2" TALL VANITY BASE WITH SOFT CLOSE TRASH ROLLOUT

CASBM11PF-18 - 1 - 34 QT WASTE CONTAINER
STILES WILL BE 1 1/2" TO ACCOMMODATE TRASH UNIT



VBC15TRFHDAH-SC
(TRASH WITH FULL HEIGHT DOOR)



VBC15TRAH-SC
(TRASH WITH DRAWER ABOVE)



LID NOT INCLUDED - SEE ORGANIZERS TAB

21" DEEP CABINET	LIST PRICE						
	A	B	C	D	E	F	G
VBC15TRFHDAH-SC	2649	2685	2763	2763	2784	2817	2967
NO MODIFICATIONS							
VBC15TRAH-SC	3051	3072	3159	3159	3177	3210	3351
NO MODIFICATIONS							

34 1/2" TALL VANITY BASE WITH SOFT CLOSE HAMPER PULL OUT

CASHAM14PF-N - 1 - 34 QT HAMPER CONTAINER
STILES WILL BE 1 1/2" TO ACCOMMODATE HAMPER UNIT





21" DEEP CABINET	LIST PRICE						
	A	B	C	D	E	F	G
VBC18HFHDAH-SC	3039	3039	3096	3096	3117	3147	3195
NO MODIFICATIONS							

32 1/2" TALL BASE W/PULLOUT IRONING BOARD

IRONING BOARD SECTION 4" TALL - 19 7/8" DEEP
BALL BEARING SLIDE SYSTEM - N/A WITH 5 PC DRAWER FRONTS

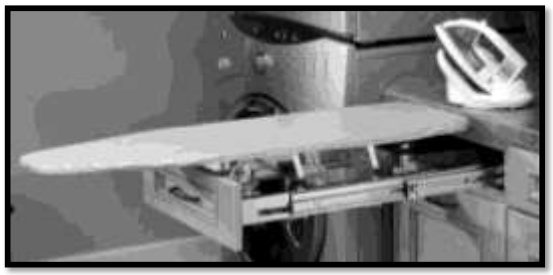

BALL BEARING SLIDE SYSTEM
CABINET STILES WILL BE ADJUSTED TO 1 1/2"

21" DEEP CABINET	LIST PRICE						
	A	B	C	D	E	F	G
VB18-VIB20CR-L	3021	3042	3069	3069	3090	3129	3279
VB18-VIB20CR-R	3021	3042	3069	3069	3090	3129	3279

A-Bristol, Prairie, Savannah15
B-Plateau, Ridgegate, Summerhill
C-Augusta15, Bedford, Charleston15, Easton, Fairway, Gateway, Harbor, Hastings15, Liberty, Seneca, Vicksburg

D-Regency
E-
F-
G-Aspen15, Centennial15, Madison15, Norfolk15, Orleans, Riverton

SEE PAGE 54 FOR DOORS AVAILABLE IN MOLDED & PRICING

CABINET TYPE — VANITIES

TOILET TOPPER

TWO ADJUSTABLE SHELVES
IN TOP SECTION

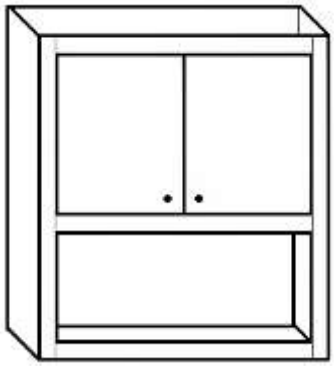

10" HIGH OPENING
MAPLE PRINT INTERIOR IN LOWER SECTION

8" DEEP CABINET	LIST PRICE						
	A	*B*	*C*	*D*	*E*	*F*	*G*
W2436TT-2B	1275	1311	1464	1464	1506	1533	1710
W2736TT-2B	1353	1386	1572	1572	1611	1644	1836
W3036TT-2B	1404	1437	1647	1647	1692	1731	1929
W3336TT-2B	1455	1488	1710	1710	1764	1803	2010
W3636TT-2B	1506	1539	1770	1770	1836	1866	2091

WITH FINISHED INTERIOR IN LOWER SECTION

W2436TTFI-2B	1659	1692	1845	1845	1887	1926	2091
W2736TTFI-2B	1734	1770	1953	1953	1995	2040	2220
W3036TTFI-2B	1785	1821	2031	2031	2076	2124	2310
W3336TTFI-2B	1836	1872	2106	2106	2157	2208	2397
W3636TTFI-2B	1887	1923	2184	2184	2235	2280	2484

MEDICINE CABINET

SURFACE MOUNT: FULL OVERLAY HAS 1/4" REVEAL ON SIDES AND BOTTOM, AND 1 1/4" REVEAL AT TOP. STANDARD OVERLAY HAS A 1 1/4" REVEAL ON ALL FOUR SIDES.
FLUSH MOUNT: FULL OVERLAY HAS 1/4" REVEAL ON ALL FOUR SIDES. STANDARD OVERLAY HAS A 1 1/4" REVEAL ON ALL FOUR SIDES.

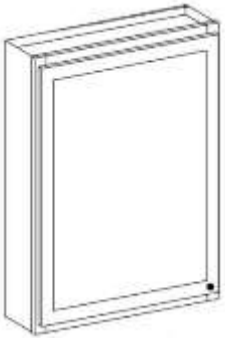

W1624MC-SML

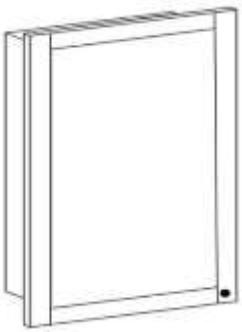

W1624MC-FML

FRAME DIMENSION IS 16" x 24"
BOX DIMENSION APPROX 14" x 22" X 4" ON FLUSH MOUNT ONLY
FITS BETWEEN STUDS ON 16" CENTERS
COMES WITH PANEL - NOT PREPPED FOR GLASS UNLESS REQUESTED
FOUR ADJUSTABLE SHELVES
SHELVES ARE 1/2" X 2 7/8" DEEP
NO MODIFICATIONS

4" DEEP CABINET	LIST PRICE						
	A	*B*	*C*	*D*	*E*	*F*	*G*
SURFACE MOUNT							
W1624MC-SML	612	639	690	690	720	723	807
W1624MC-SMR	612	639	690	690	720	723	807
FLUSH MOUNT							
W1624MC-FML	612	639	690	690	720	723	807
W1624MC-FMR	612	639	690	690	720	723	807

TRI VIEW MEDICINE CABINET

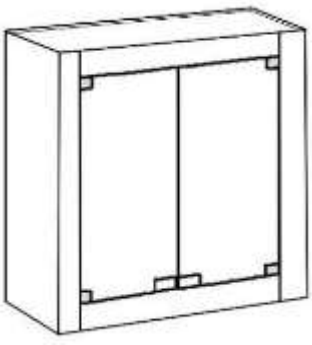

TVMC24SM

DOORS WILL HINGE ON THE OUTSIDE

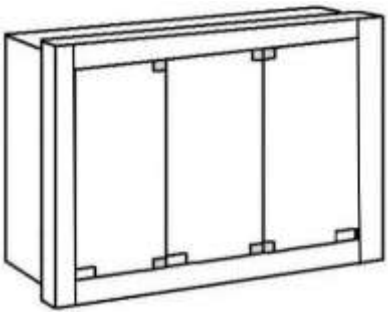

TVMC36FM

OUTSIDE DOORS WILL HINGE ON THE INSIDE. MIDDLE DOOR CAN HINGE EITHER WAY

28" TALL
BOX DIMENSION APPROX 22" X 26", 28" X 26" &
34" X 26" ON FLUSH MOUNT
TWO MIRRORS ON 24" & THREE MIRRORS ON 30" & 36"
NO LIGHTS
CHROME HARDWARE - ALL HARDWARE SENT LOOSE
FOUR ADJUSTABLE SHELVES
NO MODIFICATIONS

4" DEEP CABINET	LIST PRICE						
	A	*B*	*C*	*D*	*E*	*F*	*G*
SURFACE MOUNT							
TVMC24SM	1404	1404	1404	1404	1404	1404	1404
TVMC30SM	1659	1659	1659	1659	1659	1659	1659
TVMC36SM	1989	1989	1989	1989	1989	1989	1989
FLUSH MOUNT							
TVMC24FM	1404	1404	1404	1404	1404	1404	1404
TVMC30FM	1659	1659	1659	1659	1659	1659	1659
TVMC36FM	1989	1989	1989	1989	1989	1989	1989

NOTES OR ADDITIONS

TALL CABINET DIMENSIONS

Linen Cabinet W/1 DWR
32 1/2" Tall Lower Section

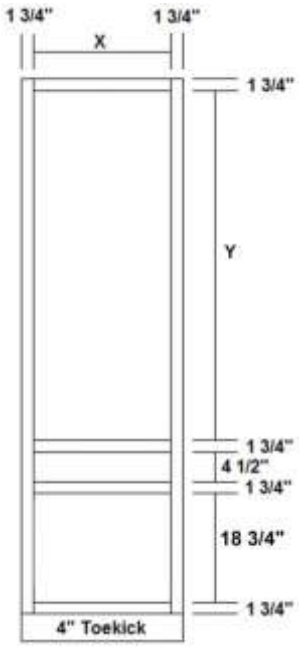

Opening Calculations
Cabinet Width - 3 1/2" = X
Cabinet Height - 34.25" = Y

Pantry/Linen Cabinet W/1 DWR
34 1/2" Tall Lower Section

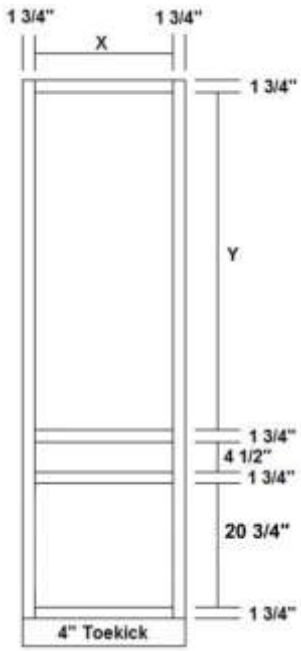

Opening Calculations
Cabinet Width - 3 1/2" = X
Cabinet Height - 36.25" = Y

Linen Cabinet W/3 DWRS
32 1/2" Tall Lower Section

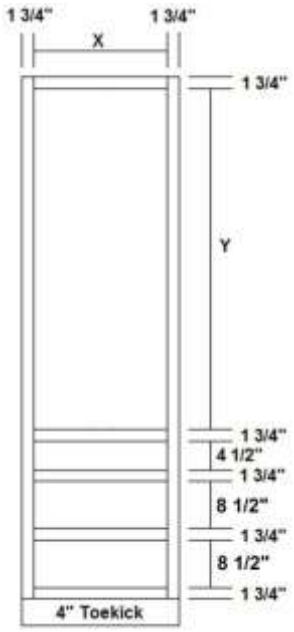

Opening Calculations
Cabinet Width - 3 1/2" = X
Cabinet Height - 34.25" = Y

Pantry/Linen Cabinet W/3 DWRS
34 1/2" Tall Lower Section

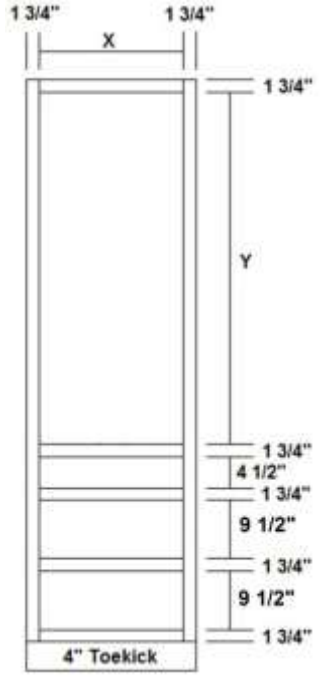

Opening Calculations
Cabinet Width - 3 1/2" = X
Cabinet Height - 36.25" = Y

Linen Inverted Cabinet
32 1/2" Tall Lower Section

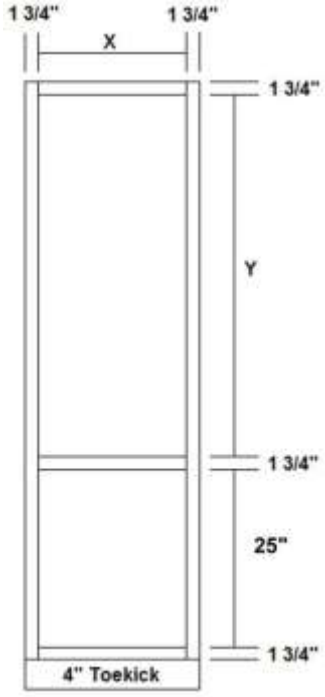

Opening Calculations
Cabinet Width - 3 1/2" = X
Cabinet Height - 34.25" = Y

Pantry/Linen Inverted Cabinet
34 1/2" Tall Lower Section

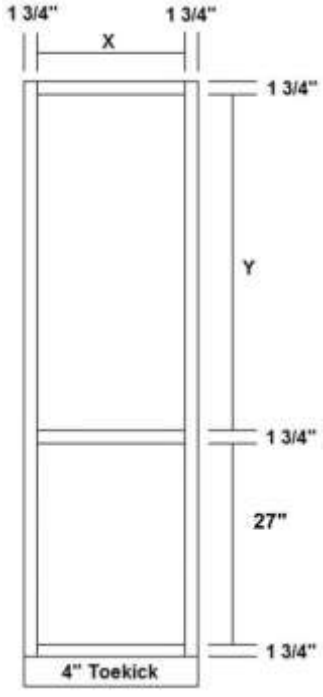

Opening Calculations
Cabinet Width - 3 1/2" = X
Cabinet Height - 36.25" = Y

TOE KICK IS RECESSED BACK 3"

TALL CABINET DIMENSIONS

Pantry

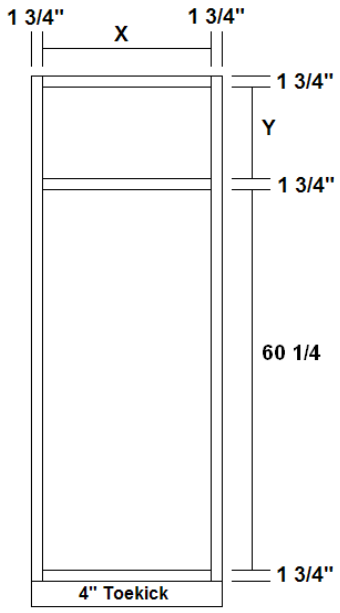

Opening Calculations
Cabinet Width - 3.5" = X
Cabinet Front Height - 69.50" = Y

Pantry Front

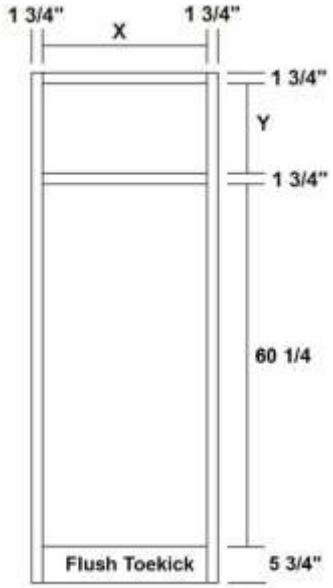

Opening Calculations
Cabinet Front Width - 3.5" = X
Cabinet Front Height - 69.50" = Y

Linen Closet

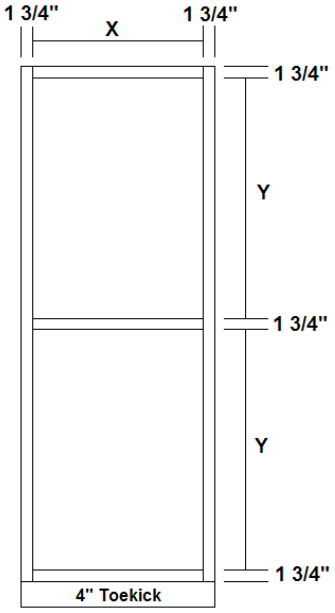

Opening Calculations
Cabinet Width - 3.5" = X
Cabinet Height - 9.25" /2 = Y

Linen Front

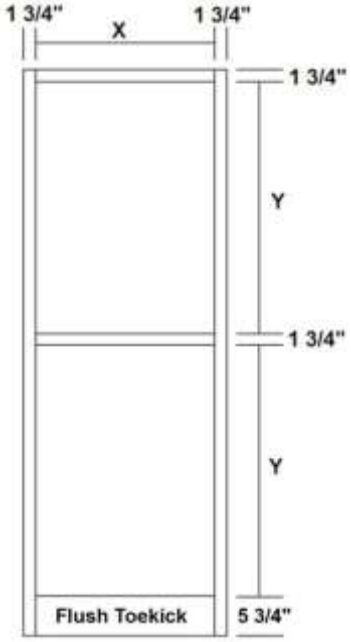

Opening Calculations
Cabinet Front Width - 3.5" = X
Cabinet Front Height - 9.25" / 2 = Y

84" Walk Thru Pantry

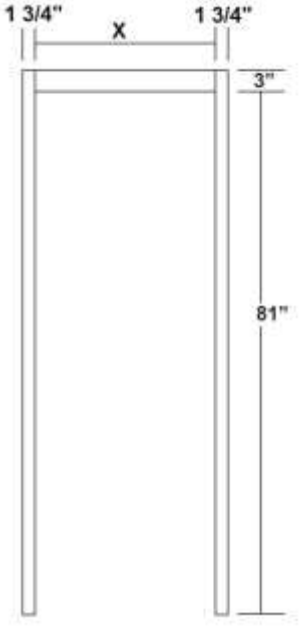

Opening Calculations
Cabinet Width - 3.5" = X
Cabinet Height - 3" = Y

90", 93", & 96" Walk Thru Pantry

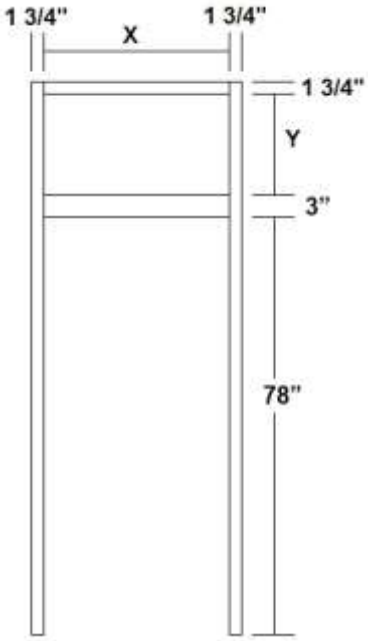

Opening Calculations
Cabinet Width - 3.5" = X
Cabinet Height - 82.75" = Y

TOE KICK IS RECESSED BACK 3"

TALL CABINET DIMENSIONS

Single Oven Cabinet

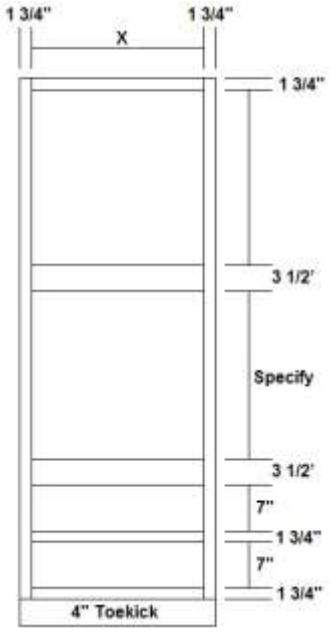

Opening Calculation
Cabinet Width - 3 1/2" = X

Microwave & Single Oven Cabinet

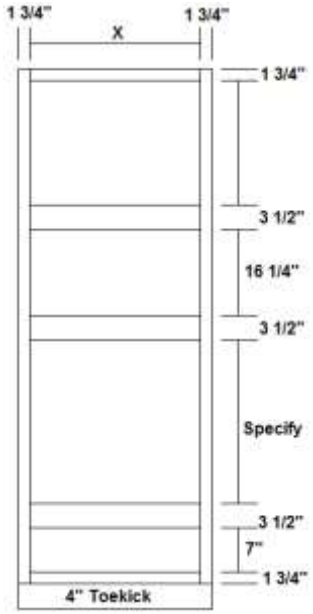

Opening Calculation
Cabinet Width - 3 1/2" = X

Double Oven Cabinet

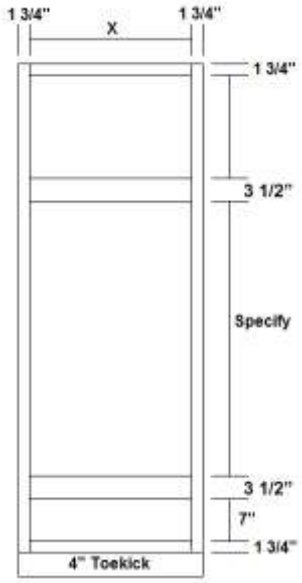

Opening Calculation
Cabinet Width - 3 1/2" = X

Microwave Oven Cabinet W/4 Drawers

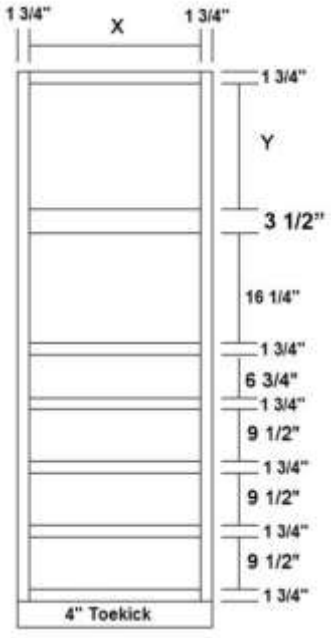

Opening Calculations
Cabinet Width - 3 1/2" = X
Cabinet Height - 69 1/2" = Y

Microwave Oven Cabinet with doors

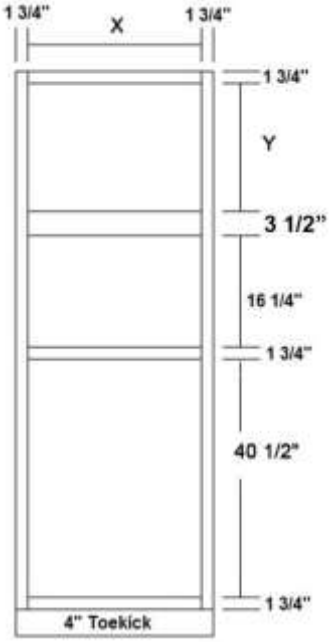

Opening Calculations
Cabinet Width - 3 1/2" = X
Cabinet Height - 69 1/2" = Y

TOE KICK IS RECESSED BACK 3"

TOP VIEW OF TALL CABINET CORNER DIMENSIONS

Tall Corner Linen
Top View

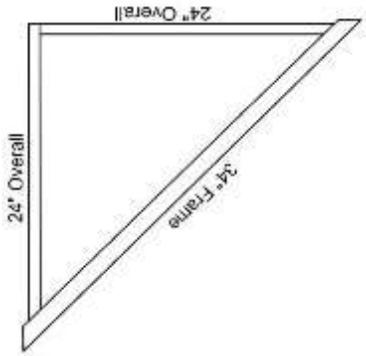



Angled Corner Linen
Top View

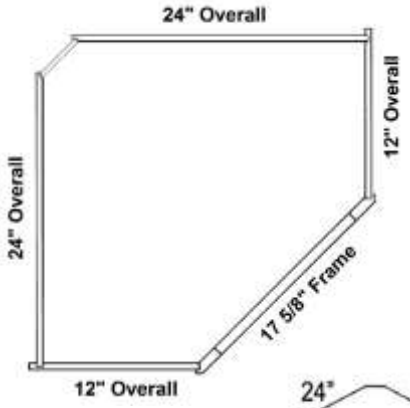

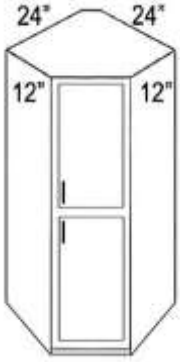

Angled Base Utility End
Top View

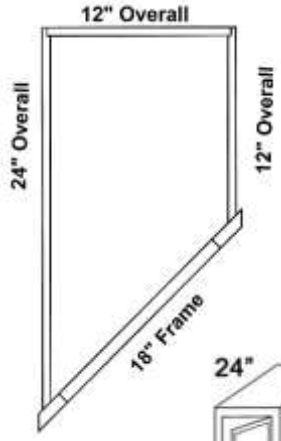



CHEF PANTRY

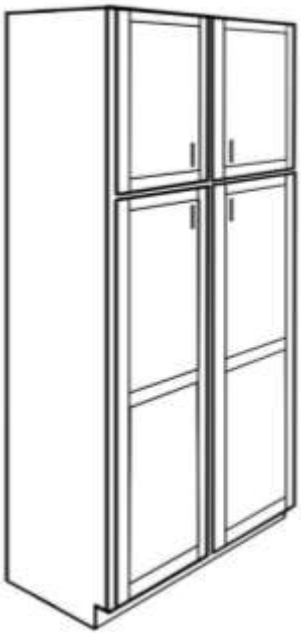

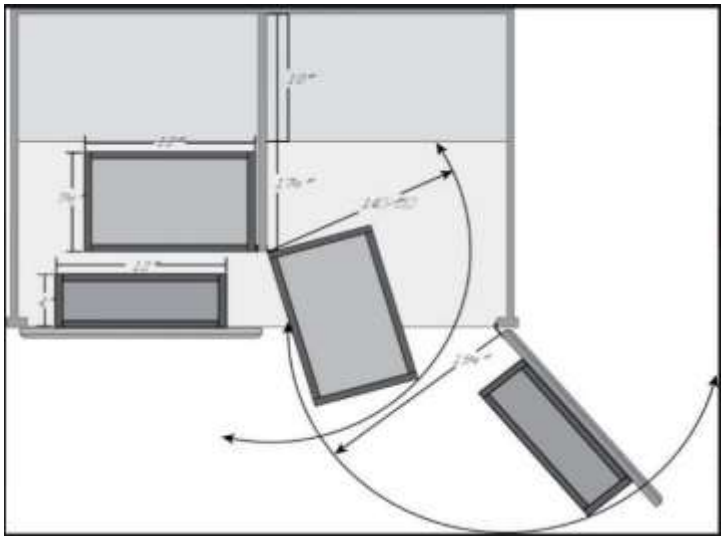



TOE KICK IS RECESSED BACK 3"

A-Bristol, Prairie, Savannah15
B-Plateau, Ridgegate, Summerhill
C-Augusta15, Bedford, Charleston15, Easton, Fairway, Gateway, Harbor, Hastings15, Liberty, Seneca, Vicksburg
D-Regency
E-
F-
G-Aspen15, Centennial15, Madison15, Norfolk15, Orleans, Riverton

SEE PAGE 54 FOR DOORS AVAILABLE IN MOLDED & PRICING

CABINET TYPE

LINEN

84" LINEN CLOSET

EQUAL DOOR OPENINGS
TWO ADJUSTABLE FULL DEPTH SHELVES IN EACH SECTION
BUTT DOORS INCLUDE TOP AND BOTTOM SECTIONS
TOP DOORS WILL MATCH STYLE USED ON WALL CABINETS

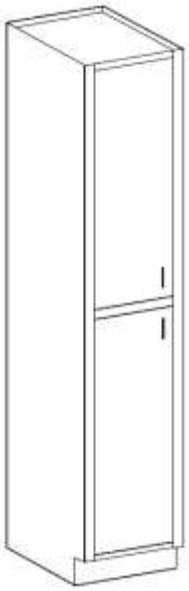

LC2484U12L

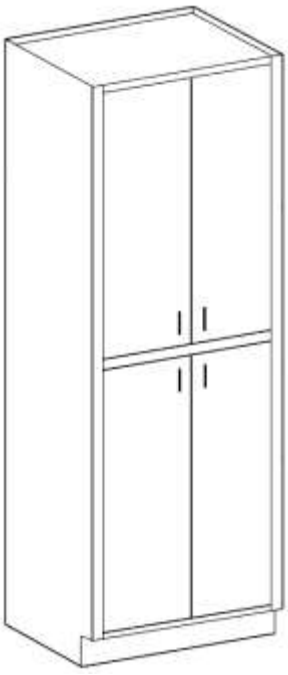

LC2484U12-4B

FOR 18" LINEN USE CODE CR-LU18

12" DEEP CABINET	LIST PRICE						
	A	B	C	D	E	F	G
LC1284U12L	1761	1785	1968	1968	2019	2064	2304
LC1284U12R	1761	1785	1968	1968	2019	2064	2304
LC1584U12L	1836	1863	2049	2049	2100	2151	2403
LC1584U12R	1836	1863	2049	2049	2100	2151	2403
LC1884U12L	1914	1938	2127	2127	2184	2235	2493
LC1884U12R	1914	1938	2127	2127	2184	2235	2493
LC2184U12L	1989	2016	2259	2259	2316	2376	2652
LC2184U12R	1989	2016	2259	2259	2316	2376	2652
LC2484U12L	2193	2220	2397	2397	2448	2511	2811
LC2484U12R	2193	2220	2397	2397	2448	2511	2811
LC2484U12-4B	2652	2703	2871	2871	2928	3012	3360
LC2784U12-4B	2703	2754	2922	2922	2979	3066	3411
LC3084U12-4B	2856	2907	3081	3081	3138	3228	3606
LC3384U12-4B	3009	3060	3243	3243	3294	3402	3795
LC3684U12-4B	3162	3213	3402	3402	3453	3564	3978
LC3984U12-4B	3315	3366	3561	3561	3615	3732	4167
LC4284U12-4B	3468	3519	3723	3723	3774	3900	4356

21" DEEP CABINET	LIST PRICE						
	A	B	C	D	E	F	G
LC1284U21L	2067	2091	2235	2235	2289	2343	2622
LC1284U21R	2067	2091	2235	2235	2289	2343	2622
LC1584U21L	2142	2169	2316	2316	2367	2427	2712
LC1584U21R	2142	2169	2316	2316	2367	2427	2712
LC1884U21L	2220	2244	2448	2448	2499	2571	2871
LC1884U21R	2220	2244	2448	2448	2499	2571	2871
LC2184U21L	2295	2322	2580	2580	2631	2706	3030
LC2184U21R	2295	2322	2580	2580	2631	2706	3030
LC2484U21L	2499	2526	2712	2712	2769	2847	3189
LC2484U21R	2499	2526	2712	2712	2769	2847	3189
LC2484U21-4B	2958	3009	3192	3192	3243	3345	3738
LC2784U21-4B	3009	3060	3243	3243	3294	3396	3789
LC3084U21-4B	3162	3213	3402	3402	3459	3564	3978
LC3384U21-4B	3315	3366	3561	3561	3615	3732	4167
LC3684U21-4B	3468	3519	3723	3723	3774	3900	4356
LC3984U21-4B	3621	3672	3882	3882	3933	4068	4545
LC4284U21-4B	3774	3825	4038	4038	4095	4236	4734

A-Bristol, Prairie, Savannah15
B-Plateau, Ridgegate, Summerhill
C-Augusta15, Bedford, Charleston15, Easton, Fairway, Gateway, Harbor, Hastings15, Liberty, Seneca, Vicksburg
D-Regency
E-
F-
G-Aspen15, Centennial15, Madison15, Norfolk15, Orleans, Riverton

SEE PAGE 54 FOR DOORS AVAILABLE IN MOLDED & PRICING

CABINET TYPE

LINEN

90" LINEN CLOSET

EQUAL DOOR OPENINGS
TWO ADJUSTABLE FULL DEPTH SHELVES IN EACH SECTION
BUTT DOORS INCLUDE TOP AND BOTTOM SECTIONS
TOP DOORS WILL MATCH STYLE USED ON WALL CABINETS

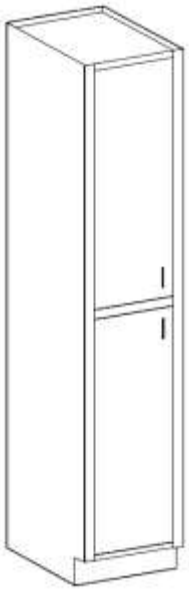

LC2490U12L

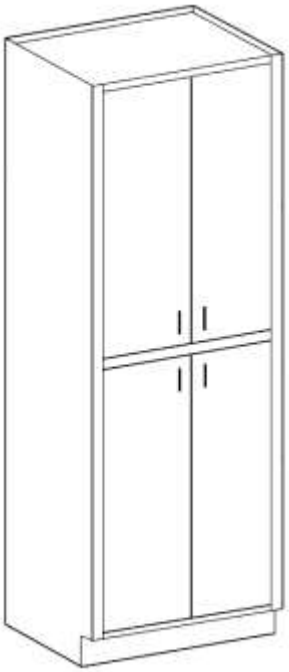

LC2490U12-4B

FOR 18" LINEN USE CODE CR-LU18

12" DEEP CABINET	LIST PRICE						
	A	B	C	D	E	F	G
LC1290U12L	1887	1914	2100	2100	2151	2202	2463
LC1290U12R	1887	1914	2100	2100	2151	2202	2463
LC1590U12L	1965	1989	2184	2184	2235	2286	2559
LC1590U12R	1965	1989	2184	2184	2235	2286	2559
LC1890U12L	2040	2067	2265	2265	2316	2370	2652
LC1890U12R	2040	2067	2265	2265	2316	2370	2652
LC2190U12L	2118	2142	2340	2340	2397	2454	2745
LC2190U12R	2118	2142	2340	2340	2397	2454	2745
LC2490U12L	2322	2346	2556	2556	2607	2679	3000
LC2490U12R	2322	2346	2556	2556	2607	2679	3000
LC2490U12-4B	2781	2832	3030	3030	3087	3177	3555
LC2790U12-4B	2832	2883	3081	3081	3138	3228	3606
LC3090U12-4B	2985	3036	3243	3243	3294	3396	3789
LC3390U12-4B	3138	3189	3402	3402	3453	3564	3984
LC3690U12-4B	3291	3342	3561	3561	3615	3732	4173
LC3990U12-4B	3444	3495	3723	3723	3774	3900	4362
LC4290U12-4B	3597	3648	3882	3882	3936	4074	4545

21" DEEP CABINET	LIST PRICE						
	A	B	C	D	E	F	G
LC1290U21L	2193	2220	2367	2367	2424	2487	2781
LC1290U21R	2193	2220	2367	2367	2424	2487	2781
LC1590U21L	2271	2295	2448	2448	2499	2571	2871
LC1590U21R	2271	2295	2448	2448	2499	2571	2871
LC1890U21L	2346	2373	2580	2580	2637	2706	3030
LC1890U21R	2346	2373	2580	2580	2637	2706	3030
LC2190U21L	2424	2448	2712	2712	2769	2847	3189
LC2190U21R	2424	2448	2712	2712	2769	2847	3189
LC2490U21L	2628	2652	2847	2847	2901	2991	3345
LC2490U21R	2628	2652	2847	2847	2901	2991	3345
LC2490U21-4B	3087	3111	3324	3324	3375	3486	3897
LC2790U21-4B	3138	3162	3375	3375	3426	3537	3948
LC3090U21-4B	3291	3315	3534	3534	3591	3705	4137
LC3390U21-4B	3444	3468	3699	3699	3750	3873	4326
LC3690U21-4B	3597	3621	3855	3855	3906	4041	4515
LC3990U21-4B	3750	3774	4014	4014	4071	4209	4701
LC4290U21-4B	3903	3927	4071	4071	4224	4374	4872

A-Bristol, Prairie, Savannah15
B-Plateau, Ridgegate, Summerhill
C-Augusta15, Bedford, Charleston15, Easton, Fairway, Gateway, Harbor, Hastings15, Liberty, Seneca, Vicksburg
D-Regency
E-
F-
G-Aspen15, Centennial15, Madison15, Norfolk15, Orleans, Riverton

SEE PAGE 54 FOR DOORS AVAILABLE IN MOLDED & PRICING

CABINET TYPE

LINEN

93" LINEN CLOSET

EQUAL DOOR OPENINGS
TWO ADJUSTABLE FULL DEPTH SHELVES IN EACH SECTION
BUTT DOORS INCLUDE TOP AND BOTTOM SECTIONS
TOP DOORS WILL MATCH STYLE USED ON WALL CABINETS



LC2193U12L

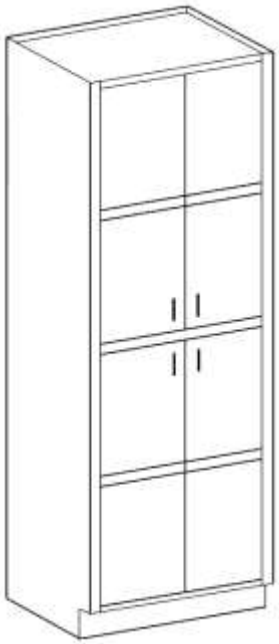

LC2493U21-4B

TOE KICK WILL BE ATTATCHED. ON 93" YOU MUST USE CODE FOR LOOSE TOE IF YOU WANT IT SENT LOOSE.

SEE PAGE 27 FOR INFORMATION ON MULTI PANEL DOORS

FOR 18" LINEN USE CODE CR-LU18

12" DEEP CABINET	LIST PRICE						
	A	B	C	D	E	F	G
LC1293U12L	2070	2094	2289	2289	2343	2397	2676
LC1293U12R	2070	2094	2289	2289	2343	2397	2676
LC1593U12L	2145	2172	2370	2370	2421	2481	2766
LC1593U12R	2145	2172	2370	2370	2421	2481	2766
LC1893U12L	2223	2247	2445	2445	2502	2565	2865
LC1893U12R	2223	2247	2445	2445	2502	2565	2865
LC2193U12L	2298	2325	2529	2529	2583	2649	2955
LC2193U12R	2298	2325	2529	2529	2583	2649	2955
LC2493U12L	2502	2529	2742	2742	2799	2877	3210
LC2493U12R	2502	2529	2742	2742	2799	2877	3210
LC2493U12-4B	3015	3066	3276	3276	3327	3426	3822
LC2793U12-4B	3066	3117	3327	3327	3378	3477	3873
LC3093U12-4B	3219	3270	3483	3483	3534	3645	4056
LC3393U12-4B	3372	3423	3642	3642	3699	3813	4245
LC3693U12-4B	3525	3576	3801	3801	3858	3981	4434
LC3993U12-4B	3678	3729	3963	3963	4014	4149	4623
LC4293U12-4B	3831	3882	4122	4122	4179	4317	4809
LOOSE TOE	0.01	0.01	0.01	0.01	0.01	0.01	0.01

21" DEEP CABINET	LIST PRICE						
	A	B	C	D	E	F	G
LC1293U21L	2400	2427	2553	2553	2610	2676	2988
LC1293U21R	2400	2427	2553	2553	2610	2676	2988
LC1593U21L	2478	2502	2634	2634	2685	2760	3084
LC1593U21R	2478	2502	2634	2634	2685	2760	3084
LC1893U21L	2553	2580	2766	2766	2823	2901	3243
LC1893U21R	2553	2580	2766	2766	2823	2901	3243
LC2193U21L	2631	2655	2901	2901	2955	3045	3399
LC2193U21R	2631	2655	2901	2901	2955	3045	3399
LC2493U21L	2835	2859	3033	3033	3090	3180	3558
LC2493U21R	2835	2859	3033	3033	3090	3180	3558
LC2493U21-4B	3348	3372	3567	3567	3618	3735	4164
LC2793U21-4B	3399	3423	3618	3618	3669	3789	4215
LC3093U21-4B	3552	3576	3774	3774	3831	3957	4401
LC3393U21-4B	3705	3729	3939	3939	3990	4125	4590
LC3693U21-4B	3858	3882	4095	4095	4146	4293	4779
LC3993U21-4B	4011	4035	4254	4254	4311	4461	4968
LC4293U21-4B	4164	4188	4419	4419	4470	4629	5157
LOOSE TOE	0.01	0.01	0.01	0.01	0.01	0.01	0.01

A-Bristol, Prairie, Savannah15
B-Plateau, Ridgegate, Summerhill
C-Augusta15, Bedford, Charleston15, Easton, Fairway, Gateway, Harbor, Hastings15, Liberty, Seneca, Vicksburg
D-Regency
E-
F-
G-Aspen15, Centennial15, Madison15, Norfolk15, Orleans, Riverton

SEE PAGE 54 FOR DOORS AVAILABLE IN MOLDED & PRICING

CABINET TYPE

LINEN

96" LINEN CLOSET

EQUAL DOOR OPENINGS
THREE ADJUSTABLE FULL DEPTH SHELVES IN EACH SECTION
BUTT DOORS INCLUDE TOP AND BOTTOM SECTIONS
TOP DOORS WILL MATCH STYLE USED ON WALL CABINETS



LC2196U12L

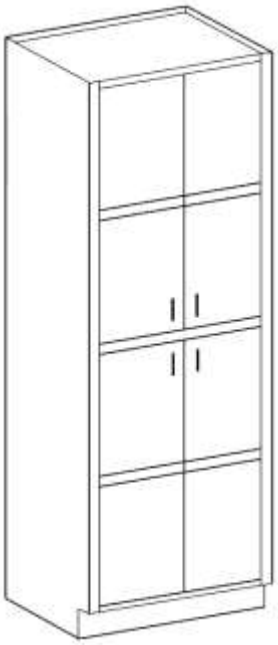

LC2496U21-4B

TOE KICK WILL BE ATTATCHED. ON 96" YOU MUST USE CODE FOR LOOSE TOE IF YOU WANT IT SENT LOOSE.

SEE PAGE 27 FOR INFORMATION ON MULTI PANEL DOORS

FOR 18" LINEN USE CODE CR-LU18

12" DEEP CABINET	LIST PRICE						
	A	B	C	D	E	F	G
LC1296U12L	2070	2094	2289	2289	2343	2397	2676
LC1296U12R	2070	2094	2289	2289	2343	2397	2676
LC1596U12L	2145	2172	2370	2370	2421	2481	2766
LC1596U12R	2145	2172	2370	2370	2421	2481	2766
LC1896U12L	2223	2247	2445	2445	2502	2565	2865
LC1896U12R	2223	2247	2445	2445	2502	2565	2865
LC2196U12L	2298	2325	2529	2529	2583	2649	2955
LC2196U12R	2298	2325	2529	2529	2583	2649	2955
LC2496U12L	2502	2529	2742	2742	2799	2877	3210
LC2496U12R	2502	2529	2742	2742	2799	2877	3210
LC2496U12-4B	3015	3066	3276	3276	3327	3426	3822
LC2796U12-4B	3066	3117	3327	3327	3378	3477	3873
LC3096U12-4B	3219	3270	3483	3483	3534	3645	4056
LC3396U12-4B	3372	3423	3642	3642	3699	3813	4245
LC3696U12-4B	3525	3576	3801	3801	3858	3981	4434
LC3996U12-4B	3678	3729	3963	3963	4014	4149	4623
LC4296U12-4B	3831	3882	4122	4122	4179	4317	4809
LOOSE TOE	0.01	0.01	0.01	0.01	0.01	0.01	0.01

21" DEEP CABINET	LIST PRICE						
	A	B	C	D	E	F	G
LC1296U21L	2400	2427	2553	2553	2610	2676	2988
LC1296U21R	2400	2427	2553	2553	2610	2676	2988
LC1596U21L	2478	2502	2634	2634	2685	2760	3084
LC1596U21R	2478	2502	2634	2634	2685	2760	3084
LC1896U21L	2553	2580	2766	2766	2823	2901	3243
LC1896U21R	2553	2580	2766	2766	2823	2901	3243
LC2196U21L	2631	2655	2901	2901	2955	3045	3399
LC2196U21R	2631	2655	2901	2901	2955	3045	3399
LC2496U21L	2835	2859	3033	3033	3090	3180	3558
LC2496U21R	2835	2859	3033	3033	3090	3180	3558
LC2496U21-4B	3348	3372	3567	3567	3618	3735	4164
LC2796U21-4B	3399	3423	3618	3618	3669	3789	4215
LC3096U21-4B	3552	3576	3774	3774	3831	3957	4401
LC3396U21-4B	3705	3729	3939	3939	3990	4125	4590
LC3696U21-4B	3858	3882	4095	4095	4146	4293	4779
LC3996U21-4B	4011	4035	4254	4254	4311	4461	4968
LC4296U21-4B	4164	4188	4419	4419	4470	4629	5157
LOOSE TOE	0.01	0.01	0.01	0.01	0.01	0.01	0.01

A-Bristol, Prairie, Savannah15
B-Plateau, Ridgegate, Summerhill
C-Augusta15, Bedford, Charleston15, Easton, Fairway, Gateway, Harbor, Hastings15, Liberty, Seneca, Vicksburg
D-Regency
E-
F-
G-Aspen15, Centennial15, Madison15, Norfolk15, Orleans, Riverton

SEE PAGE 54 FOR DOORS AVAILABLE IN MOLDED & PRICING

CABINET TYPE

84" & 90" TALL LINEN CLOSET W/3 DRAWERS

LOWER SECTION WILL BE 32 1/2" HEIGHT OR ADULT HEIGHT (AH) OF 34 1/2"
THREE ADJUSTABLE FULL DEPTH SHELVES IN TOP SECTION
1 - 4 1/2" DRAWER & 2 - 8 1/2" DRAWERS
AH WILL HAVE 1 - 4 1/2" DRAWER & 2 - 9 1/2" DRAWERS



LCD1584-3L



LCD2484-3-2B

SEE PAGE 27 FOR INFORMATION ON MULTI PANEL DOORS

FOR 18" LINEN USE CODE CR-LU18

LINEN

84" TALL LINEN W/3 DRAWERS

21" DEEP CABINET	LIST PRICE						
	A	B	C	D	E	F	G
LCD1584-3L	3297	3324	3507	3507	3558	3657	4047
LCD1584-3R	3297	3324	3507	3507	3558	3657	4047
LCD1884-3L	3375	3399	3582	3582	3639	3801	4206
LCD1884-3R	3375	3399	3582	3582	3639	3801	4206
LCD2184-3L	3450	3477	3771	3771	3822	3942	4362
LCD2184-3R	3450	3477	3771	3771	3822	3942	4362
LCD2484-3L	3654	3681	3903	3903	3954	4077	4521
LCD2484-3R	3654	3681	3903	3903	3954	4077	4521
LCD2484-3-2B	4038	4065	4302	4302	4353	4497	4986
LCD2784-3-2B	4089	4116	4353	4353	4404	4551	5037
LCD3084-3-2B	4242	4269	4512	4512	4569	4719	5226
LCD3384-3-2B	4395	4422	4665	4665	4722	4872	5379
LCD3684-3-2B	4548	4575	4818	4818	4875	5025	5532

AH 21" DEEP CABINET	LIST PRICE						
	A	B	C	D	E	F	G
LCD1584AH-3L	3297	3324	3507	3507	3558	3657	4047
LCD1584AH-3R	3297	3324	3507	3507	3558	3657	4047
LCD1884AH-3L	3375	3399	3582	3582	3639	3801	4206
LCD1884AH-3R	3375	3399	3582	3582	3639	3801	4206
LCD2184AH-3L	3450	3477	3771	3771	3822	3942	4362
LCD2184AH-3R	3450	3477	3771	3771	3822	3942	4362
LCD2484AH-3L	3654	3681	3903	3903	3954	4077	4521
LCD2484AH-3R	3654	3681	3903	3903	3954	4077	4521
LCD2484AH-3-2B	4038	4065	4302	4302	4353	4497	4986
LCD2784AH-3-2B	4089	4116	4353	4353	4404	4551	5037
LCD3084AH-3-2B	4242	4269	4512	4512	4569	4719	5226
LCD3384AH-3-2B	4395	4422	4665	4665	4722	4872	5379
LCD3684AH-3-2B	4548	4575	4818	4818	4875	5025	5532

90" TALL LINEN W/3 DRAWERS

21" DEEP CABINET	LIST PRICE						
	A	B	C	D	E	F	G
LCD1590-3L	3432	3459	3642	3642	3693	3792	4206
LCD1590-3R	3432	3459	3642	3642	3693	3792	4206
LCD1890-3L	3510	3534	3717	3717	3774	3936	4365
LCD1890-3R	3510	3534	3717	3717	3774	3936	4365
LCD2190-3L	3585	3612	3906	3906	3957	4077	4521
LCD2190-3R	3585	3612	3906	3906	3957	4077	4521
LCD2490-3L	3789	3816	4038	4038	4089	4212	4680
LCD2490-3R	3789	3816	4038	4038	4089	4212	4680
LCD2490-3-2B	4173	4200	4437	4437	4488	4632	5145
LCD2790-3-2B	4224	4251	4488	4488	4539	4686	5196
LCD3090-3-2B	4377	4404	4647	4647	4704	4854	5385
LCD3390-3-2B	4530	4557	4800	4800	4857	5007	5538
LCD3690-3-2B	4683	4710	4953	4953	5010	5160	5691

AH 21" DEEP CABINET	LIST PRICE						
	A	B	C	D	E	F	G
LCD1590AH-3L	3432	3459	3642	3642	3693	3792	4206
LCD1590AH-3R	3432	3459	3642	3642	3693	3792	4206
LCD1890AH-3L	3510	3534	3717	3717	3774	3936	4365
LCD1890AH-3R	3510	3534	3717	3717	3774	3936	4365
LCD2190AH-3L	3585	3612	3906	3906	3957	4077	4521
LCD2190AH-3R	3585	3612	3906	3906	3957	4077	4521
LCD2490AH-3L	3789	3816	4038	4038	4089	4212	4680
LCD2490AH-3R	3789	3816	4038	4038	4089	4212	4680
LCD2490AH-3-2B	4173	4200	4437	4437	4488	4632	5145
LCD2790AH-3-2B	4224	4251	4488	4488	4539	4686	5196
LCD3090AH-3-2B	4377	4404	4647	4647	4704	4854	5385
LCD3390AH-3-2B	4530	4557	4800	4800	4857	5007	5538
LCD3690AH-3-2B	4683	4710	4953	4953	5010	5160	5691

A-Bristol, Prairie, Savannah15
B-Plateau, Ridgegate, Summerhill
C-Augusta15, Bedford, Charleston15, Easton, Fairway, Gateway, Harbor, Hastings15, Liberty, Seneca, Vicksburg
D-Regency
E-
F-
G-Aspen15, Centennial15, Madison15, Norfolk15, Orleans, Riverton

SEE PAGE 54 FOR DOORS AVAILABLE IN MOLDED & PRICING

CABINET TYPE

LINEN

93" & 96" TALL LINEN CLOSET W/3 DRAWERS

LOWER SECTION WILL BE 32 1/2" HEIGHT OR ADULT HEIGHT (AH) OF 34 1/2"
93" HAS THREE ADJUSTABLE FULL DEPTH SHELVES IN TOP SECTION
96" HAS FOUR ADJUSTABLE FULL DEPTH SHELVES IN TOP SECTION
1 - 4 1/2" DRAWER & 2 - 8 1/2" DRAWERS
AH WILL HAVE 1 - 4 1/2" DRAWER & 2 - 9 1/2" DRAWERS

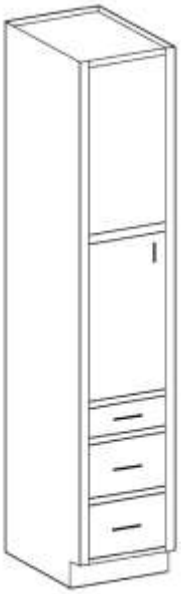

LCD1593-3L



LCD2493-3-2B

TOE KICK WILL BE ATTATCHED. ON 96" YOU MUST USE CODE FOR LOOSE TOE IF YOU WANT IT SENT LOOSE.

SEE PAGE 27 FOR INFORMATION ON MULTI PANEL DOORS

FOR 18" LINEN USE CODE CR-LU18

93" TALL LINEN W/3 DRAWERS

21" DEEP CABINET	LIST PRICE						
	A	B	C	D	E	F	G
LCD1593-3L	3567	3594	3777	3777	3828	3927	4365
LCD1593-3R	3567	3594	3777	3777	3828	3927	4365
LCD1893-3L	3645	3669	3852	3852	3909	4071	4524
LCD1893-3R	3645	3669	3852	3852	3909	4071	4524
LCD2193-3L	3720	3747	4041	4041	4092	4212	4680
LCD2193-3R	3720	3747	4041	4041	4092	4212	4680
LCD2493-3L	3924	3951	4173	4173	4224	4347	4839
LCD2493-3R	3924	3951	4173	4173	4224	4347	4839
LCD2493-3-2B	4308	4335	4572	4572	4623	4767	5304
LCD2793-3-2B	4359	4386	4623	4623	4674	4821	5355
LCD3093-3-2B	4512	4539	4782	4782	4839	4989	5544
LCD3393-3-2B	4665	4692	4935	4935	4992	5142	5697
LCD3693-3-2B	4818	4710	5088	5088	5145	5295	5850

AH 21" DEEP CABINET	LIST PRICE						
	A	B	C	D	E	F	G
LCD1593AH-3L	3567	3594	3777	3777	3828	3927	4365
LCD1593AH-3R	3567	3594	3777	3777	3828	3927	4365
LCD1893AH-3L	3645	3669	3852	3852	3909	4071	4524
LCD1893AH-3R	3645	3669	3852	3852	3909	4071	4524
LCD2193AH-3L	3720	3747	4041	4041	4092	4212	4680
LCD2193AH-3R	3720	3747	4041	4041	4092	4212	4680
LCD2493AH-3L	3924	3951	4173	4173	4224	4347	4839
LCD2493AH-3R	3924	3951	4173	4173	4224	4347	4839
LCD2493AH-3-2B	4308	4335	4572	4572	4623	4767	5304
LCD2793AH-3-2B	4359	4386	4623	4623	4674	4821	5355
LCD3093AH-3-2B	4512	4539	4782	4782	4839	4989	5544
LCD3393AH-3-2B	4665	4692	4935	4935	4992	5142	5697
LCD3693AH-3-2B	4818	4710	5088	5088	5145	5295	5850

96" TALL LINEN W/3 DRAWERS

21" DEEP CABINET	LIST PRICE						
	A	B	C	D	E	F	G
LCD1596-3L	3702	3729	3912	3912	3963	4062	4524
LCD1596-3R	3702	3729	3912	3912	3963	4062	4524
LCD1896-3L	3780	3804	3987	3987	4044	4206	4683
LCD1896-3R	3780	3804	3987	3987	4044	4206	4683
LCD2196-3L	3855	3882	4176	4176	4227	4347	4839
LCD2196-3R	3855	3882	4176	4176	4227	4347	4839
LCD2496-3L	4059	4086	4308	4308	4359	4482	4998
LCD2496-3R	4059	4086	4308	4308	4359	4482	4998
LCD2496-3-2B	4443	4470	4707	4707	4758	4902	5463
LCD2796-3-2B	4494	4521	4758	4758	4809	4956	5514
LCD3096-3-2B	4647	4674	4917	4917	4974	5124	5703
LCD3396-3-2B	4800	4827	5070	5070	5127	5277	5856
LCD3696-3-2B	4953	4845	5223	5223	5280	5430	6009
LOOSE TOE	0.01	0.01	0.01	0.01	0.01	0.01	0.01

AH 21" DEEP CABINET	LIST PRICE						
	A	B	C	D	E	F	G
LCD1596AH-3L	3702	3729	3912	3912	3963	4062	4524
LCD1596AH-3R	3702	3729	3912	3912	3963	4062	4524
LCD1896AH-3L	3780	3804	3987	3987	4044	4206	4683
LCD1896AH-3R	3780	3804	3987	3987	4044	4206	4683
LCD2196AH-3L	3855	3882	4176	4176	4227	4347	4839
LCD2196AH-3R	3855	3882	4176	4176	4227	4347	4839
LCD2496AH-3L	4059	4086	4308	4308	4359	4482	4998
LCD2496AH-3R	4059	4086	4308	4308	4359	4482	4998
LCD2496AH-3-2B	4443	4470	4707	4707	4758	4902	5463
LCD2796AH-3-2B	4494	4521	4758	4758	4809	4956	5514
LCD3096AH-3-2B	4647	4674	4917	4917	4974	5124	5703
LCD3396AH-3-2B	4800	4827	5070	5070	5127	5277	5856
LCD3696AH-3-2B	1651	1662	1741	1741	1760	1810	2003
LOOSE TOE	0.01	0.01	0.01	0.01	0.01	0.01	0.01

A-Bristol, Prairie, Savannah15
B-Plateau, Ridgegate, Summerhill
C-Augusta15, Bedford, Charleston15, Easton, Fairway, Gateway, Harbor, Hastings15, Liberty, Seneca, Vicksburg
D-Regency
E-
F-
G-Aspen15, Centennial15, Madison15, Norfolk15, Orleans, Riverton

SEE PAGE 54 FOR DOORS AVAILABLE IN MOLDED & PRICING

CABINET TYPE

84" & 90" TALL LINEN WITH ONE DRAWER

LOWER SECTION WILL BE 32 1/2" HEIGHT OR ADULT HEIGHT (AH) OF 34 1/2"
TOP SECTION HAS THREE ADJUSTABLE FULL DEPTH SHELVES
BOTTOM SECTION HAS ONE ADJUSTABLE FULL DEPTH SHELF
DRAWER IS 4 1/2" TALL

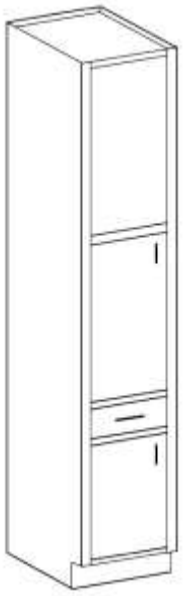

LCD1584-1L

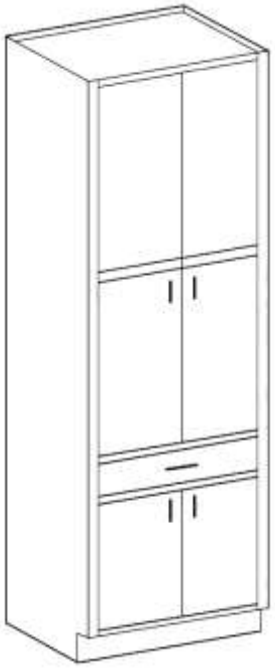

LCD2484-1-4B

SEE PAGE 27 FOR INFORMATION ON MULTI PANEL DOORS

FOR 18" LINEN USE CODE CR-LU18

LINEN

84" TALL LINEN W/1 DRAWER

21" DEEP CABINET	LIST PRICE						
	A	B	C	D	E	F	G
LCD1584-1L	3117	3144	3327	3327	3378	3477	3867
LCD1584-1R	3117	3144	3327	3327	3378	3477	3867
LCD1884-1L	3195	3219	3402	3402	3459	3621	4026
LCD1884-1R	3195	3219	3402	3402	3459	3621	4026
LCD2184-1L	3270	3297	3591	3591	3642	3762	4182
LCD2184-1R	3270	3297	3591	3591	3642	3762	4182
LCD2484-1L	3474	3501	3723	3723	3774	3897	4341
LCD2484-1R	3474	3501	3723	3723	3774	3897	4341
LCD2484-1-4B	3909	3936	4173	4173	4224	4368	4857
LCD2784-1-4B	3960	3987	4224	4224	4275	4422	4908
LCD3084-1-4B	4113	4140	4383	4383	4440	4590	5097
LCD3384-1-4B	4266	4293	4536	4536	4593	4743	5250
LCD3684-1-4B	4419	4446	4689	4689	4746	4896	5403

AH 21" DEEP CABINET	LIST PRICE						
	A	B	C	D	E	F	G
LCD1584AH-1L	3117	3144	3327	3327	3378	3477	3867
LCD1584AH-1R	3117	3144	3327	3327	3378	3477	3867
LCD1884AH-1L	3195	3219	3402	3402	3459	3621	4026
LCD1884AH-1R	3195	3219	3402	3402	3459	3621	4026
LCD2184AH-1L	3270	3297	3591	3591	3642	3762	4182
LCD2184AH-1R	3270	3297	3591	3591	3642	3762	4182
LCD2484AH-1L	3474	3501	3723	3723	3774	3897	4341
LCD2484AH-1R	3474	3501	3723	3723	3774	3897	4341
LCD2484AH-1-4B	3909	3936	4173	4173	4224	4368	4857
LCD2784AH-1-4B	3960	3987	4224	4224	4275	4422	4908
LCD3084AH-1-4B	4113	4140	4383	4383	4440	4590	5097
LCD3384AH-1-4B	4266	4293	4536	4536	4593	4743	5250
LCD3684AH-1-4B	4419	4446	4689	4689	4746	4896	5403

90" TALL LINEN W/1 DRAWER

21" DEEP CABINET	LIST PRICE						
	A	B	C	D	E	F	G
LCD1590-1L	3252	3279	3462	3462	3513	3612	4026
LCD1590-1R	3252	3279	3462	3462	3513	3612	4026
LCD1890-1L	3330	3354	3537	3537	3594	3756	4185
LCD1890-1R	3330	3354	3537	3537	3594	3756	4185
LCD2190-1L	3405	3432	3726	3726	3777	3897	4341
LCD2190-1R	3405	3432	3726	3726	3777	3897	4341
LCD2490-1L	3609	3636	3858	3858	3909	4032	4500
LCD2490-1R	3609	3636	3858	3858	3909	4032	4500
LCD2490-1-4B	4044	4071	4308	4308	4359	4503	5016
LCD2790-1-4B	4095	4122	4359	4359	4410	4557	5067
LCD3090-1-4B	4248	4275	4518	4518	4575	4725	5256
LCD3390-1-4B	4401	4428	4671	4671	4728	4878	5409
LCD3690-1-4B	4554	4581	4824	4824	4881	5031	5562

AH 21" DEEP CABINET	LIST PRICE						
	A	B	C	D	E	F	G
LCD1590AH-1L	3252	3279	3462	3462	3513	3612	4026
LCD1590AH-1R	3330	3354	3537	3537	3594	3756	4185
LCD1890AH-1L	3330	3354	3537	3537	3594	3756	4185
LCD1890AH-1R	3405	3432	3726	3726	3777	3897	4341
LCD2190AH-1L	3405	3432	3726	3726	3777	3897	4341
LCD2190AH-1R	3609	3636	3858	3858	3909	4032	4500
LCD2490AH-1L	3609	3636	3858	3858	3909	4032	4500
LCD2490AH-1R	4044	4071	4308	4308	4359	4503	5016
LCD2490AH-1-4B	4095	4122	4359	4359	4410	4557	5067
LCD2790AH-1-4B	4248	4275	4518	4518	4575	4725	5256
LCD3090AH-1-4B	4401	4428	4671	4671	4728	4878	5409
LCD3390AH-1-4B	4554	4581	4824	4824	4881	5031	5562
LCD3690AH-1-4B	1518	1527	1608	1608	1627	1677	1854

A-Bristol, Prairie, Savannah15
B-Plateau, Ridgegate, Summerhill
C-Augusta15, Bedford, Charleston15, Easton, Fairway, Gateway, Harbor, Hastings15, Liberty, Seneca, Vicksburg
D-Regency
E-
F-
G-Aspen15, Centennial15, Madison15, Norfolk15, Orleans, Riverton

SEE PAGE 54 FOR DOORS AVAILABLE IN MOLDED & PRICING

CABINET TYPE

LINEN

93" TALL LINEN W/ONE DRAWER

LOWER SECTION WILL BE 32 1/2" HEIGHT OR ADULT HEIGHT (AH) OF 34 1/2"
93" HAS THREE ADJUSTABLE FULL DEPTH SHELVES IN TOP SECTION
96" HAS FOUR ADJUSTABLE FULL DEPTH SHELVES IN TOP SECTION
93" & 96" HAS ONE ADJUSTABLE FULL DEPTH SHELF IN BOTTOM SECTION
DRAWER IS 4 1/2" TALL

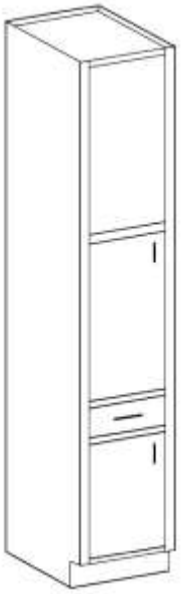

LCD1593-1L

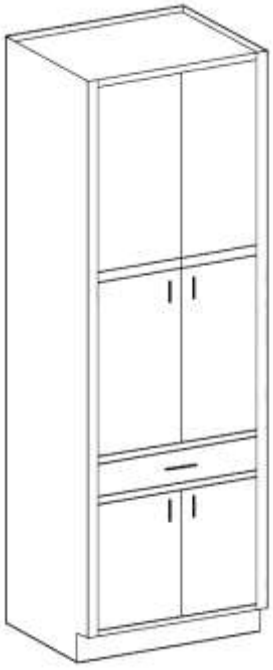

LCD2493-1-4B

SEE PAGE 27 FOR INFORMATION ON MULTI PANEL DOORS

FOR 18" LINEN USE CODE CR-LU18

93" TALL LINEN W/1 DRAWER

21" DEEP CABINET	LIST PRICE						
	A	B	C	D	E	F	G
LCD1593-1L	3387	3414	3597	3597	3648	3747	4185
LCD1593-1R	3387	3414	3597	3597	3648	3747	4185
LCD1893-1L	3465	3489	3672	3672	3729	3891	4344
LCD1893-1R	3465	3489	3672	3672	3729	3891	4344
LCD2193-1L	3540	3567	3861	3861	3912	4032	4500
LCD2193-1R	3540	3567	3861	3861	3912	4032	4500
LCD2493-1L	3744	3771	3993	3993	4044	4167	4659
LCD2493-1R	3744	3771	3993	3993	4044	4167	4659
LCD2493-1-4B	4179	4206	4443	4443	4494	4638	5175
LCD2793-1-4B	4230	4257	4494	4494	4545	4692	5226
LCD3093-1-4B	4383	4410	4653	4653	4710	4860	5415
LCD3393-1-4B	4536	4563	4806	4806	4863	5013	5568
LCD3693-1-4B	4689	4581	4959	4959	5016	5166	5721

AH 21" DEEP CABINET	LIST PRICE						
	A	B	C	D	E	F	G
LCD1593AH-1L	3387	3414	3597	3597	3648	3747	4185
LCD1593AH-1R	3387	3414	3597	3597	3648	3747	4185
LCD1893AH-1L	3465	3489	3672	3672	3729	3891	4344
LCD1893AH-1R	3465	3489	3672	3672	3729	3891	4344
LCD2193AH-1L	3540	3567	3861	3861	3912	4032	4500
LCD2193AH-1R	3540	3567	3861	3861	3912	4032	4500
LCD2493AH-1L	3744	3771	3993	3993	4044	4167	4659
LCD2493AH-1R	3744	3771	3993	3993	4044	4167	4659
LCD2493AH-1-4B	4179	4206	4443	4443	4494	4638	5175
LCD2793AH-1-4B	4230	4257	4494	4494	4545	4692	5226
LCD3093AH-1-4B	4383	4410	4653	4653	4710	4860	5415
LCD3393AH-1-4B	4536	4563	4806	4806	4863	5013	5568
LCD3693AH-1-4B	4689	4581	4959	4959	5016	5166	5721

96" TALL LINEN W/1 DRAWER

21" DEEP CABINET	LIST PRICE						
	A	B	C	D	E	F	G
LCD1596-1L	3522	3549	3732	3732	3783	3882	4344
LCD1596-1R	3522	3549	3732	3732	3783	3882	4344
LCD1896-1L	3570	3594	3777	3777	3834	3996	4473
LCD1896-1R	3570	3594	3777	3777	3834	3996	4473
LCD2196-1L	3645	3672	3966	3966	4017	4137	4629
LCD2196-1R	3645	3672	3966	3966	4017	4137	4629
LCD2496-1L	3849	3876	4098	4098	4149	4272	4788
LCD2496-1R	3849	3876	4098	4098	4149	4272	4788
LCD2496-1-4B	4284	4311	4548	4548	4599	4743	5304
LCD2796-1-4B	4335	4362	4599	4599	4650	4797	5355
LCD3096-1-4B	4488	4515	4758	4758	4815	4965	5544
LCD3396-1-4B	4641	4668	4911	4911	4968	5118	5697
LCD3696-1-4B	4794	4686	5064	5064	5121	5271	5850
LOOSE TOE	0.01	0.01	0.01	0.01	0.01	0.01	0.01

AH 21" DEEP CABINET	LIST PRICE						
	A	B	C	D	E	F	G
LCD1596AH-1L	3522	3549	3732	3732	3783	3882	4344
LCD1596AH-1R	3522	3549	3732	3732	3783	3882	4344
LCD1896AH-1L	3570	3594	3777	3777	3834	3996	4473
LCD1896AH-1R	3570	3594	3777	3777	3834	3996	4473
LCD2196AH-1L	3645	3672	3966	3966	4017	4137	4629
LCD2196AH-1R	3645	3672	3966	3966	4017	4137	4629
LCD2496AH-1L	3849	3876	4098	4098	4149	4272	4788
LCD2496AH-1R	3849	3876	4098	4098	4149	4272	4788
LCD2496AH-1-4B	4284	4311	4548	4548	4599	4743	5304
LCD2796AH-1-4B	4335	4362	4599	4599	4650	4797	5355
LCD3096AH-1-4B	4488	4515	4758	4758	4815	4965	5544
LCD3396AH-1-4B	4641	4668	4911	4911	4968	5118	5697
LCD3696AH-1-4B	4794	4821	5064	5064	5121	5271	5850
LOOSE TOE	0.01	0.01	0.01	0.01	0.01	0.01	0.01

A-Bristol, Prairie, Savannah15
B-Plateau, Ridgegate, Summerhill
C-Augusta15, Bedford, Charleston15, Easton, Fairway, Gateway, Harbor, Hastings15, Liberty, Seneca, Vicksburg
D-Regency
E-
F-
G-Aspen15, Centennial15, Madison15, Norfolk15, Orleans, Riverton

SEE PAGE 54 FOR DOORS AVAILABLE IN MOLDED & PRICING

CABINET TYPE

84" & 90" TALL INVERTED LINEN

LOWER SECTION WILL BE 32 1/2" HEIGHT OR ADULT HEIGHT (AH) OF 34 1/2"

84" HAS THREE ADJUSTABLE FULL DEPTH SHELVES IN TOP SECTION
84" HAS ONE ADJUSTABLE FULL DEPTH SHELF IN BOTTOM SECTION
84" (AH) HAS THREE ADJUSTABLE FULL DEPTH SHELVES IN TOP SECTION
84" (AH) HAS TWO ADJUSTABLE FULL DEPTH SHELVES IN BOTTOM SECTION

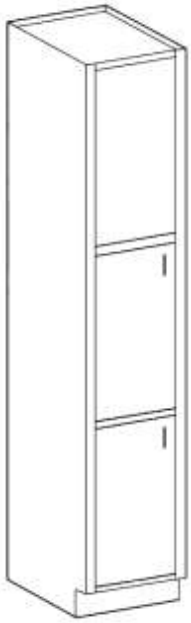

LCIV1584L

90" HAS THREE ADJUSTABLE FULL DEPTH SHELVES IN TOP SECTION
90" HAS ONE ADJUSTABLE FULL DEPTH SHELF IN BOTTOM SECTION
90" (AH) HAS THREE ADJUSTABLE FULL DEPTH SHELVES IN TOP SECTION
90" (AH) HAS TWO ADJUSTABLE FULL DEPTH SHELVES IN BOTTOM SECTION

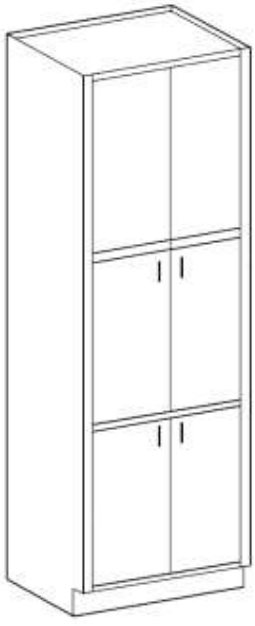

LCIV2484-4B

SEE PAGE 27 FOR INFORMATION ON MULTI PANEL DOORS
FOR 18" LINEN USE CODE CR-LU18

LINEN

84" TALL INVERTED LINEN

21" DEEP CABINET	LIST PRICE						
	A	B	C	D	E	F	G
LCIV1584L	2994	3021	3204	3204	3255	3354	3744
LCIV1584R	2994	3021	3204	3204	3255	3354	3744
LCIV1884L	3072	3096	3279	3279	3336	3498	3903
LCIV1884R	3072	3096	3279	3279	3336	3498	3903
LCIV2184L	3147	3174	3468	3468	3519	3639	4059
LCIV2184R	3147	3174	3468	3468	3519	3639	4059
LCIV2484L	3351	3378	3600	3600	3651	3774	4218
LCIV2484R	3351	3378	3600	3600	3651	3774	4218
LCIV2484-4B	3786	3813	4050	4050	4101	4245	4734
LCIV2784-4B	3837	3864	4101	4101	4152	4299	4785
LCIV3084-4B	3990	4017	4260	4260	4317	4467	4974
LCIV3384-4B	4143	4170	4413	4413	4470	4620	5127
LCIV3684-4B	4296	4323	4566	4566	4623	4773	5280

AH 21" DEEP CABINET	LIST PRICE						
	A	B	C	D	E	F	G
LCIV1584AHL	2994	3021	3204	3204	3255	3354	3744
LCIV1584AHR	2994	3021	3204	3204	3255	3354	3744
LCIV1884AHL	3072	3096	3279	3279	3336	3498	3903
LCIV1884AHR	3072	3096	3279	3279	3336	3498	3903
LCIV2184AHL	3147	3174	3468	3468	3519	3639	4059
LCIV2184AHR	3147	3174	3468	3468	3519	3639	4059
LCIV2484AHL	3351	3378	3600	3600	3651	3774	4218
LCIV2484AHR	3351	3378	3600	3600	3651	3774	4218
LCIV2484AH-4B	3786	3813	4050	4050	4101	4245	4734
LCIV2784AH-4B	3837	3864	4101	4101	4152	4299	4785
LCIV3084AH-4B	3990	4017	4260	4260	4317	4467	4974
LCIV3384AH-4B	4143	4170	4413	4413	4470	4620	5127
LCIV3684AH-4B	4296	4323	4566	4566	4623	4773	5280

90" TALL INVERTED LINEN

21" DEEP CABINET	LIST PRICE						
	A	B	C	D	E	F	G
LCIV1590L	3099	3126	3309	3309	3360	3459	3873
LCIV1590R	3099	3126	3309	3309	3360	3459	3873
LCIV1890L	3177	3201	3384	3384	3441	3603	4032
LCIV1890R	3177	3201	3384	3384	3441	3603	4032
LCIV2190L	3252	3279	3573	3573	3624	3744	4188
LCIV2190R	3252	3279	3573	3573	3624	3744	4188
LCIV2490L	3456	3483	3705	3705	3756	3879	4347
LCIV2490R	3456	3483	3705	3705	3756	3879	4347
LCIV2490-4B	3891	3918	4155	4155	4206	4350	4863
LCIV2790-4B	3942	3969	4206	4206	4257	4404	4914
LCIV3090-4B	4095	4122	4365	4365	4422	4572	5103
LCIV3390-4B	4248	4275	4518	4518	4575	4725	5256
LCIV3690-4B	4401	4428	4671	4671	4728	4878	5409

AH 21" DEEP CABINET	LIST PRICE						
	A	B	C	D	E	F	G
LCIV1590AHL	3099	3126	3309	3309	3360	3459	3873
LCIV1590AHR	3099	3126	3309	3309	3360	3459	3873
LCIV1890AHL	3177	3201	3384	3384	3441	3603	4032
LCIV1890AHR	3177	3201	3384	3384	3441	3603	4032
LCIV2190AHL	3252	3279	3573	3573	3624	3744	4188
LCIV2190AHR	3252	3279	3573	3573	3624	3744	4188
LCIV2490AHL	3456	3483	3705	3705	3756	3879	4347
LCIV2490AHR	3456	3483	3705	3705	3756	3879	4347
LCIV2490AH-4B	3891	3918	4155	4155	4206	4350	4863
LCIV2790AH-4B	3942	3969	4206	4206	4257	4404	4914
LCIV3090AH-4B	4095	4122	4365	4365	4422	4572	5103
LCIV3390AH-4B	4248	4275	4518	4518	4575	4725	5256
LCIV3690AH-4B	4401	4428	4671	4671	4728	4878	5409

A-Bristol, Prairie, Savannah15
B-Plateau, Ridgegate, Summerhill
C-Augusta15, Bedford, Charleston15, Easton, Fairway, Gateway, Harbor, Hastings15, Liberty, Seneca, Vicksburg
D-Regency
E-
F-
G-Aspen15, Centennial15, Madison15, Norfolk15, Orleans, Riverton

SEE PAGE 54 FOR DOORS AVAILABLE IN MOLDED & PRICING

CABINET TYPE

93" & 96" TALL INVERTED LINEN

LOWER SECTION WILL BE 32 1/2" HEIGHT OR ADULT HEIGHT (AH) OF 34 1/2"
93" HAS THREE ADJUSTABLE FULL DEPTH SHELVES IN TOP SECTION
96" HAS FOUR ADJUSTABLE FULL DEPTH SHELF IN TOP SECTION
93" & 96" HAVE ONE ADJUSTABLE FULL DEPTH SHELF IN BOTTOM SECTION
93" (AH) HAS THREE ADJUSTABLE FULL DEPTH SHELVES IN TOP SECTION
96" (AH) HAS FOUR ADJUSTABLE FULL DEPTH SHELVES IN TOP SECTION
93" & 96" (AH) HAVE TWO ADJUSTABLE FULL DEPTH SHELF IN BOTTOM SECTION

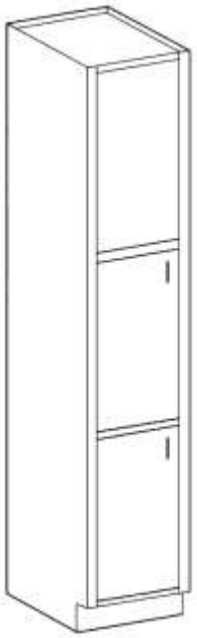

LCIV1593L

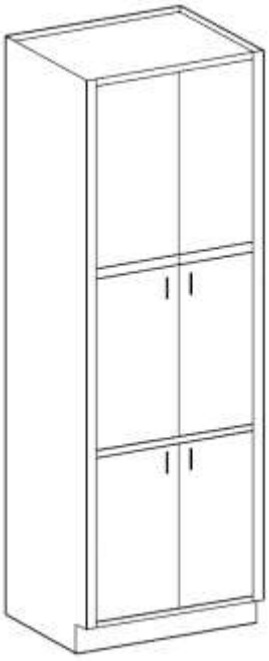

LCIV2493-4B

SEE PAGE 27 FOR INFORMATION ON MULTI PANEL DOORS
FOR 18" LINEN USE CODE CR-LU18

LINEN

93" TALL INVERTED LINEN

21" DEEP CABINET	LIST PRICE						
	A	B	C	D	E	F	G
LCIV1593L	3234	3261	3444	3444	3495	3594	4032
LCIV1593R	3234	3261	3444	3444	3495	3594	4032
LCIV1893L	3312	3336	3519	3519	3576	3738	4191
LCIV1893R	3312	3336	3519	3519	3576	3738	4191
LCIV2193L	3387	3414	3708	3708	3759	3879	4347
LCIV2193R	3387	3414	3708	3708	3759	3879	4347
LCIV2493L	3591	3618	3840	3840	3891	4014	4506
LCIV2493R	3591	3618	3840	3840	3891	4014	4506
LCIV2493-4B	4026	4053	4290	4290	4341	4485	5022
LCIV2793-4B	4077	4104	4341	4341	4392	4539	5073
LCIV3093-4B	4230	4257	4500	4500	4557	4707	5262
LCIV3393-4B	4383	4410	4653	4653	4710	4860	5415
LCIV3693-4B	4536	4587	4806	4806	4863	5013	5568

AH 21" DEEP CABINET	LIST PRICE						
	A	B	C	D	E	F	G
LCIV1593AHL	3234	3261	3444	3444	3495	3594	4032
LCIV1593AHR	3234	3261	3444	3444	3495	3594	4032
LCIV1893AHL	3312	3336	3519	3519	3576	3738	4191
LCIV1893AHR	3312	3336	3519	3519	3576	3738	4191
LCIV2193AHL	3387	3414	3708	3708	3759	3879	4347
LCIV2193AHR	3387	3414	3708	3708	3759	3879	4347
LCIV2493AHL	3591	3618	3840	3840	3891	4014	4506
LCIV2493AHR	3591	3618	3840	3840	3891	4014	4506
LCIV2493AH-4B	4026	4053	4290	4290	4341	4485	5022
LCIV2793AH-4B	4077	4104	4341	4341	4392	4539	5073
LCIV3093AH-4B	4230	4257	4500	4500	4557	4707	5262
LCIV3393AH-4B	4383	4410	4653	4653	4710	4860	5415
LCIV3693AH-4B	4536	4587	4806	4806	4863	5013	5568

96" TALL INVERTED LINEN

21" DEEP CABINET	LIST PRICE						
	A	B	C	D	E	F	G
LCIV1596L	3369	3396	3579	3579	3630	3729	4191
LCIV1596R	3369	3396	3579	3579	3630	3729	4191
LCIV1896L	3417	3441	3624	3624	3681	3843	4320
LCIV1896R	3417	3441	3624	3624	3681	3843	4320
LCIV2196L	3492	3519	3813	3813	3864	3984	4476
LCIV2196R	3492	3519	3813	3813	3864	3984	4476
LCIV2496L	3696	3723	3945	3945	3996	4119	4635
LCIV2496R	3696	3723	3945	3945	3996	4119	4635
LCIV2496-4B	4131	4158	4395	4395	4446	4590	5151
LCIV2796-4B	4182	4209	4446	4446	4497	4644	5202
LCIV3096-4B	4335	4362	4605	4605	4662	4812	5391
LCIV3396-4B	4488	4515	4758	4758	4815	4965	5544
LCIV3696-4B	4641	4668	4911	4911	4968	5118	5697
LOOSE TOE	0.01	0.01	0.01	0.01	0.01	0.01	0.01

AH 21" DEEP CABINET	LIST PRICE						
	A	B	C	D	E	F	G
LCIV1596AHL	3369	3396	3579	3579	3630	3729	4191
LCIV1596AHR	3369	3396	3579	3579	3630	3729	4191
LCIV1896AHL	3417	3441	3624	3624	3681	3843	4320
LCIV1896AHR	3417	3441	3624	3624	3681	3843	4320
LCIV2196AHL	3492	3519	3813	3813	3864	3984	4476
LCIV2196AHR	3492	3519	3813	3813	3864	3984	4476
LCIV2496AHL	3696	3723	3945	3945	3996	4119	4635
LCIV2496AHR	3696	3723	3945	3945	3996	4119	4635
LCIV2496AH-4B	4131	4158	4395	4395	4446	4590	5151
LCIV2796AH-4B	4182	4209	4446	4446	4497	4644	5202
LCIV3096AH-4B	4335	4362	4605	4605	4662	4812	5391
LCIV3396AH-4B	4488	4515	4758	4758	4815	4965	5544
LCIV3696AH-4B	4641	4668	4911	4911	4968	5118	5697
LOOSE TOE	0.01	0.01	0.01	0.01	0.01	0.01	0.01

A-Bristol, Prairie, Savannah15
B-Plateau, Ridgegate, Summerhill
C-Augusta15, Bedford, Charleston15, Easton, Fairway, Gateway, Harbor, Hastings15, Liberty, Seneca, Vicksburg
D-Regency
E-
F-
G-Aspen15, Centennial15, Madison15, Norfolk15, Orleans, Riverton

SEE PAGE 54 FOR DOORS AVAILABLE IN MOLDED & PRICING

CABINET TYPE — LINEN

84", 90", 93" AND 96" TALL CORNER LINEN

DIAGONAL FRONT
TWO ADJUSTABLE SHELVES IN EACH SECTION
2 1/2" STILES
2 EQUAL OPENINGS
TOP DOORS MATCH STYLE USED ON WALL CABINETS

TOE KICK WILL BE SENT LOOSE



LC2484DIA-4B

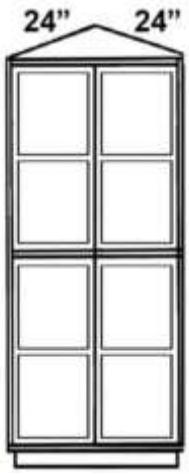

LC2496DIA-4B

SEE PAGE 27 FOR INFORMATION ON MULTI PANEL DOORS

24" DEEP CABINET	LIST PRICE						
	A	B	C	D	E	F	G
LC2484DIA-4B	4872	4923	5133	5133	5187	5811	6030
LC2490DIA-4B	5001	5025	5271	5271	5322	5970	6198
LC2493DIA-4B	5187	5283	5499	5499	5550	6213	6459
LC2496DIA-4B	5262	5388	5619	5619	5670	6357	6600
LOOSE TOE	0.01	0.01	0.01	0.01	0.01	0.01	0.01

84", 90", 93" AND 96" TALL ANGLED CORNER LINEN W/12" DEEP SIDES

TWO ADJUSTABLE SHELVES IN EACH SECTION
2 EQUAL OPENINGS
TOP DOORS MATCH STYLE USED ON WALL CABINETS
2 1/4" STILES
INTEGRATED ENDS NOT RECOMMENDED - SEE PAGE **281**

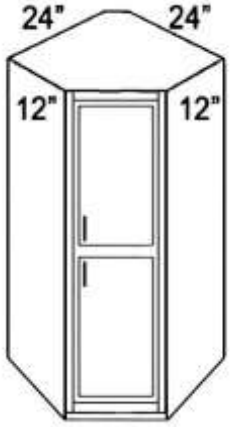

LD2484R

TOE KICK WILL BE ATTATCHED. ON 96" YOU MUST USE CODE FOR LOOSE TOE IF YOU WANT IT SENT LOOSE.

SEE PAGE 27 FOR INFORMATION ON MULTI PANEL DOORS

24" DEEP CABINET	LIST PRICE						
	A	B	C	D	E	F	G
LD2484L	5070	5121	5331	5331	5385	6009	6228
LD2484R	5070	5121	5331	5331	5385	6009	6228
LD2490L	5199	5223	5469	5469	5520	6168	6396
LD2490R	5199	5223	5469	5469	5520	6168	6396
LD2493L	5256	5418	5685	5685	5694	6366	6303
LD2493R	5256	5418	5685	5685	5694	6366	6303
LD2496L	5406	5532	5763	5763	5814	6501	6744
LD2496R	5406	5532	5763	5763	5814	6501	6744
FOR 96" ONLY							
LOOSE TOE	0.01	0.01	0.01	0.01	0.01	0.01	0.01

A-Bristol, Prairie, Savannah15
B-Plateau, Ridgegate, Summerhill
C-Augusta15, Bedford, Charleston15, Easton, Fairway, Gateway, Harbor, Hastings15, Liberty, Seneca, Vicksburg
D-Regency
E-
F-
G-Aspen15, Centennial15, Madison15, Norfolk15, Orleans, Riverton

SEE PAGE 54 FOR DOORS AVAILABLE IN MOLDED & PRICING

CABINET TYPE

LINEN

84", 90", 93" and 96" TALL LINEN FRONT

5 3/4" FLUSH TOE KICK
1 3/4" STILES
1 3/4" RAILS

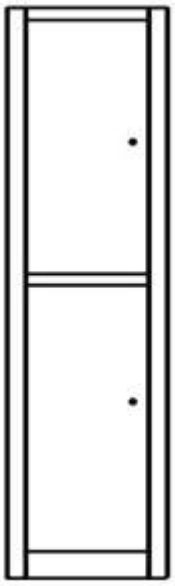

LF1584L

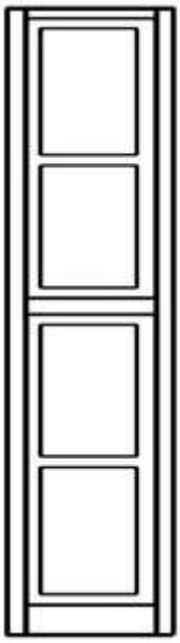

LF1593R

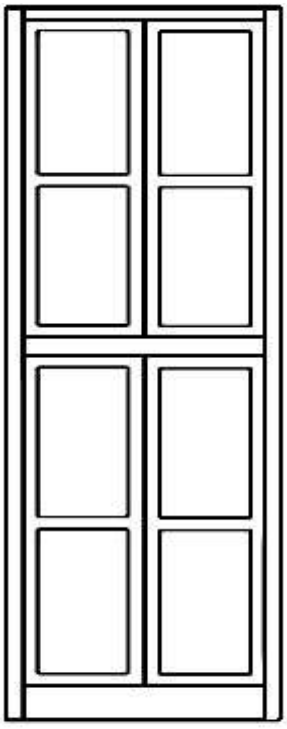

LF2796-4B

84" TALL FRONT	LIST PRICE						
	A	B	C	D	E	F	G
LF1584L	852	945	1077	1077	1173	1224	1305
LF1584R	852	945	1077	1077	1173	1224	1305
LF1884L	945	1035	1173	1173	1269	1320	1422
LF1884R	945	1035	1173	1173	1269	1320	1422
LF2184L	1035	1128	1269	1269	1365	1416	1542
LF2184R	1035	1128	1269	1269	1365	1416	1542
LF2484L	1128	1218	1365	1365	1557	1608	1659
LF2484R	1128	1218	1365	1365	1557	1608	1659
LF2484-4B	1362	1455	1608	1608	1704	1755	1947
LF2784-4B	1566	1659	1812	1812	1908	1959	2151
LF3084-4B	1659	1749	1908	1908	2004	2055	2268
LF3384-4B	1749	1842	2004	2004	2100	2151	2388
LF3684-4B	1842	1932	2100	2100	2196	2247	2505
LF3984-4B	1932	2025	2196	2196	2292	2343	2622
LF4284-4B	2025	2118	2292	2292	2385	2436	2742

90" TALL FRONT	LIST PRICE						
	A	B	C	D	E	F	G
LF1590L	1056	1149	1281	1281	1377	1428	1509
LF1590R	1056	1149	1281	1281	1377	1428	1509
LF1890L	1149	1239	1377	1377	1473	1524	1626
LF1890R	1149	1239	1377	1377	1473	1524	1626
LF2190L	1239	1332	1473	1473	1569	1620	1746
LF2190R	1239	1332	1473	1473	1569	1620	1746
LF2490L	1332	1422	1569	1569	1761	1812	1863
LF2490R	1332	1422	1569	1569	1761	1812	1863
LF2490-4B	1566	1659	1812	1812	1908	1959	2151
LF2790-4B	1770	1863	2016	2016	2112	2163	2355
LF3090-4B	1863	1953	2112	2112	2208	2259	2472
LF3390-4B	1953	2046	2208	2208	2304	2355	2592
LF3690-4B	2046	2136	2304	2304	2400	2451	2709
LF3990-4B	2136	2229	2400	2400	2496	2547	2826
LF4290-4B	2229	2322	2496	2496	2589	2640	2946

93" TALL FRONT	LIST PRICE						
	A	B	C	D	E	F	G
LF1593L	1314	1407	1539	1539	1635	1686	1767
LF1593R	1314	1407	1539	1539	1635	1686	1767
LF1893L	1407	1497	1635	1635	1731	1782	1884
LF1893R	1407	1497	1635	1635	1731	1782	1884
LF2193L	1497	1590	1731	1731	1827	1878	2004
LF2193R	1497	1590	1731	1731	1827	1878	2004
LF2493L	1590	1680	1827	1827	2019	2070	2121
LF2493R	1590	1680	1827	1827	2019	2070	2121
LF2493-4B	1878	1971	2124	2124	2220	2271	2463
LF2793-4B	2082	2175	2328	2328	2424	2475	2667
LF3093-4B	2175	2265	2424	2424	2520	2571	2784
LF3393-4B	2265	2358	2520	2520	2616	2667	2904
LF3693-4B	2358	2448	2616	2616	2712	2763	3021
LF3993-4B	2448	2541	2712	2712	2808	2859	3138
LF4293-4B	2541	2634	2808	2808	2901	2952	3258

96" TALL FRONT	LIST PRICE						
	A	B	C	D	E	F	G
LF1596L	1335	1428	1560	1560	1656	1707	1788
LF1596R	1335	1428	1560	1560	1656	1707	1788
LF1896L	1428	1518	1656	1656	1752	1803	1905
LF1896R	1428	1518	1656	1656	1752	1803	1905
LF2196L	1518	1611	1752	1752	1848	1899	2025
LF2196R	1518	1611	1752	1752	1848	1899	2025
LF2496L	1611	1701	1848	1848	2040	2091	2142
LF2496R	1611	1701	1848	1848	2040	2091	2142
LF2496-4B	1899	1992	2145	2145	2241	2292	2484
LF2796-4B	2103	2196	2349	2349	2445	2496	2688
LF3096-4B	2196	2286	2445	2445	2541	2592	2805
LF3396-4B	2286	2379	2541	2541	2637	2688	2925
LF3696-4B	2379	2469	2637	2637	2733	2784	3042
LF3996-4B	2469	2562	2733	2733	2829	2880	3159
LF4296-4B	2562	2655	2829	2829	2922	2973	3279

A-Bristol, Prairie, Savannah15
B-Plateau, Ridgegate, Summerhill
C-Augusta15, Bedford, Charleston15, Easton, Fairway, Gateway, Harbor, Hastings15, Liberty, Seneca, Vicksburg
D-Regency
E-
F-
G-Aspen15, Centennial15, Madison15, Norfolk15, Orleans, Riverton

SEE PAGE 54 FOR DOORS AVAILABLE IN MOLDED & PRICING

CABINET TYPE

PANTRY

84" PANTRY

NO SHELF IN TOP SECTION
FOUR ADJUSTABLE FULL DEPTH SHELVES IN BOTTOM SECTION

BUTT DOORS INCLUDE TOP AND BOTTOM SECTIONS
TOP DOORS WILL MATCH STYLE USED ON WALL CABINETS
42" MAXIMUM WIDTH

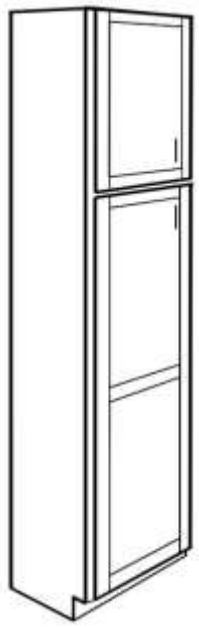

P1884U12R

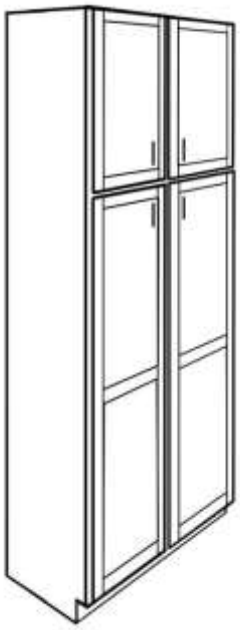

P2484U12-4B

SEE PAGE 27 FOR INFORMATION ON MULTI PANEL DOORS

12" DEEP CABINET	LIST PRICE						
	A	B	C	D	E	F	G
P1284U12L	1320	1473	1695	1695	1854	1905	1986
P1284U12R	1320	1473	1695	1695	1854	1905	1986
P1584U12L	1380	1533	1755	1755	1914	1965	2046
P1584U12R	1380	1533	1755	1755	1914	1965	2046
P1884U12L	1533	1686	1914	1914	2073	2124	2235
P1884U12R	1533	1686	1914	1914	2073	2124	2235
P2184U12L	1686	1839	2073	2073	2235	2286	2424
P2184U12R	1686	1839	2073	2073	2235	2286	2424
P2484U12L	1839	1992	2232	2232	2394	2445	2613
P2484U12R	1839	1992	2232	2232	2394	2445	2613
P2484U12-4B	2223	2376	2631	2631	2793	2844	3069
P2784U12-4B	2376	2529	2787	2787	2952	3003	3246
P3084U12-4B	2529	2682	2952	2952	3108	3159	3435
P3384U12-4B	2682	2835	3108	3108	3267	3318	3624
P3684U12-4B	2835	2988	3267	3267	3429	3480	3813
P3984U12-4B	2988	3141	3429	3429	3588	3639	4002
P4284U12-4B	3141	3294	3588	3588	3747	3798	4191

24" DEEP CABINET	LIST PRICE						
	A	B	C	D	E	F	G
P1284U24L	1548	1701	1932	1932	2094	2145	2271
P1284U24R	1548	1701	1932	1932	2094	2145	2271
P1584U24L	1608	1761	1992	1992	2154	2205	2331
P1584U24R	1608	1761	1992	1992	2154	2205	2331
P1884U24L	1761	1914	2154	2154	2316	2367	2520
P1884U24R	1761	1914	2154	2154	2316	2367	2520
P2184U24L	1914	2067	2313	2313	2475	2526	2709
P2184U24R	1914	2067	2313	2313	2475	2526	2709
P2484U24L	2067	2220	2472	2472	2634	2685	2898
P2484U24R	2067	2220	2472	2472	2634	2685	2898
P2484U24-4B	2451	2604	2868	2868	3033	3084	3354
P2784U24-4B	2604	2757	3027	3027	3192	3243	3531
P3084U24-4B	2757	2910	3192	3192	3348	3399	3720
P3384U24-4B	2910	3063	3348	3348	3507	3558	3909
P3684U24-4B	3063	3216	3507	3507	3669	3720	4098
P3984U24-4B	3216	3369	3669	3669	3828	3879	4287
P4284U24-4B	3369	3522	3828	3828	3987	4038	4476

SEE PAGE 54 FOR DOORS AVAILABLE IN MOLDED & PRICING

CABINET TYPE

PANTRY

90" PANTRY

ONE ADJUSTABLE FULL DEPTH SHELF IN TOP SECTION
FOUR ADJUSTABLE FULL DEPTH SHELVES IN BOTTOM SECTION

BUTT DOORS INCLUDE TOP AND BOTTOM SECTIONS
TOP DOORS WILL MATCH STYLE USED ON WALL CABINETS
42" MAXIMUM WIDTH

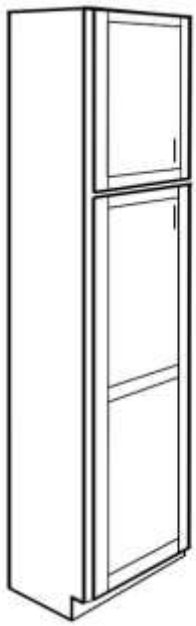

P2190U12R

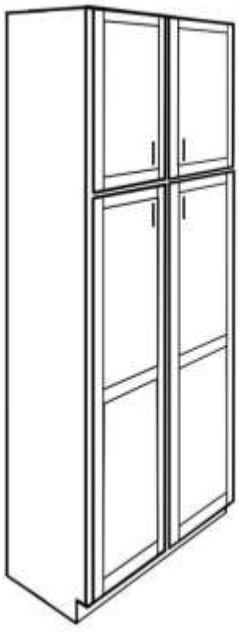

P2490U12-4B

SEE PAGE 27 FOR INFORMATION ON MULTI PANEL DOORS

12" DEEP CABINET	LIST PRICE						
	A	B	C	D	E	F	G
P1290U12L	1539	1692	1923	1923	2085	2136	2259
P1290U12R	1539	1692	1923	1923	2085	2136	2259
P1590U12L	1599	1752	1983	1983	2145	2196	2319
P1590U12R	1599	1752	1983	1983	2145	2196	2319
P1890U12L	1752	1905	2142	2142	2301	2352	2508
P1890U12R	1752	1905	2142	2142	2301	2352	2508
P2190U12L	1905	2058	2301	2301	2466	2517	2694
P2190U12R	1905	2058	2301	2301	2466	2517	2694
P2490U12L	2058	2211	2463	2463	2622	2673	2883
P2490U12R	2058	2211	2463	2463	2622	2673	2883
P2490U12-4B	2442	2595	2859	2859	3021	3072	3339
P2790U12-4B	2595	2748	3018	3018	3180	3231	3516
P3090U12-4B	2748	2901	3180	3180	3339	3390	3705
P3390U12-4B	2901	3054	3339	3339	3498	3549	3894
P3690U12-4B	3054	3207	3498	3498	3660	3711	4083
P3990U12-4B	3207	3360	3660	3660	3819	3870	4272
P4290U12-4B	3360	3513	3819	3819	3975	4026	4461

24" DEEP CABINET	LIST PRICE						
	A	B	C	D	E	F	G
P1290U24L	1767	1920	2163	2163	2322	2373	2541
P1290U24R	1767	1920	2163	2163	2322	2373	2541
P1590U24L	1827	1980	2223	2223	2382	2433	2601
P1590U24R	1827	1980	2223	2223	2382	2433	2601
P1890U24L	1980	2133	2382	2382	2547	2598	2790
P1890U24R	1980	2133	2382	2382	2547	2598	2790
P2190U24L	2133	2286	2541	2541	2706	2757	2979
P2190U24R	2133	2286	2541	2541	2706	2757	2979
P2490U24L	2286	2439	2703	2703	2862	2913	3168
P2490U24R	2286	2439	2703	2703	2862	2913	3168
P2490U24-4B	2670	2823	3099	3099	3261	3312	3624
P2790U24-4B	2823	2976	3258	3258	3420	3471	3804
P3090U24-4B	2976	3129	3420	3420	3579	3630	3990
P3390U24-4B	3129	3282	3579	3579	3735	3786	4179
P3690U24-4B	3282	3435	3735	3735	3900	3951	4368
P3990U24-4B	3435	3588	3900	3900	4059	4110	4557
P4290U24-4B	3588	3741	4059	4059	4215	4266	4746

A-Bristol, Prairie, Savannah15
B-Plateau, Ridgegate, Summerhill
C-Augusta15, Bedford, Charleston15, Easton, Fairway, Gateway, Harbor, Hastings15, Liberty, Seneca, Vicksburg
D-Regency
E-
F-
G-Aspen15, Centennial15, Madison15, Norfolk15, Orleans, Riverton

SEE PAGE 54 FOR DOORS AVAILABLE IN MOLDED & PRICING

CABINET TYPE

PANTRY

93" PANTRY

ONE ADJUSTABLE FULL DEPTH SHELF IN TOP SECTION
FOUR ADJUSTABLE FULL DEPTH SHELVES IN BOTTOM SECTION
42" MAXIMUM WIDTH
BUTT DOORS INCLUDE TOP AND BOTTOM SECTIONS
TOP DOORS WILL MATCH STYLE USED ON WALL CABINETS

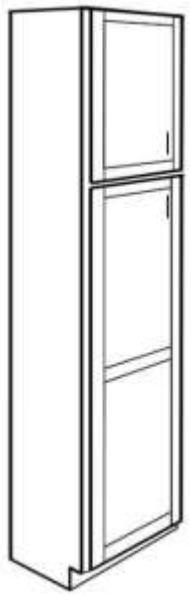

P1893U12R

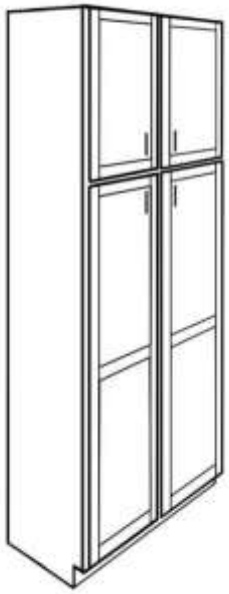

P4293U12-4B

SEE PAGE 27 FOR INFORMATION ON MULTI PANEL DOORS

12" DEEP CABINET	LIST PRICE						
	A	B	C	D	E	F	G
P1293U12L	1752	1905	2145	2145	2307	2358	2523
P1293U12R	1752	1905	2145	2145	2307	2358	2523
P1593U12L	1812	1965	2205	2205	2367	2418	2583
P1593U12R	1812	1965	2205	2205	2367	2418	2583
P1893U12L	1965	2118	2367	2367	2526	2577	2772
P1893U12R	1965	2118	2367	2367	2526	2577	2772
P2193U12L	2118	2271	2526	2526	2688	2739	2961
P2193U12R	2118	2271	2526	2526	2688	2739	2961
P2493U12L	2271	2424	2685	2685	2847	2898	3147
P2493U12R	2271	2424	2685	2685	2847	2898	3147
P2493U12-4B	2655	2808	3084	3084	3246	3297	3603
P2793U12-4B	2808	2961	3243	3243	3405	3456	3783
P3093U12-4B	2961	3114	3399	3399	3564	3615	3972
P3393U12-4B	3114	3267	3564	3564	3720	3771	4161
P3693U12-4B	3267	3420	3720	3720	3879	3930	4347
P3993U12-4B	3420	3573	3879	3879	4041	4092	4536
P4293U12-4B	3573	3726	4041	4041	4200	4251	4725

24" DEEP CABINET	LIST PRICE						
	A	B	C	D	E	F	G
P1293U24L	1983	2136	2385	2385	2547	2598	2805
P1293U24R	1983	2136	2385	2385	2547	2598	2805
P1593U24L	2043	2196	2445	2445	2607	2658	2865
P1593U24R	2043	2196	2445	2445	2607	2658	2865
P1893U24L	2196	2349	2607	2607	2766	2817	3054
P1893U24R	2196	2349	2607	2607	2766	2817	3054
P2193U24L	2349	2502	2766	2766	2928	2979	3243
P2193U24R	2349	2502	2766	2766	2928	2979	3243
P2493U24L	2502	2655	2925	2925	3087	3138	3432
P2493U24R	2502	2655	2925	2925	3087	3138	3432
P2493U24-4B	2886	3039	3324	3324	3486	3537	3888
P2793U24-4B	3039	3192	3480	3480	3645	3696	4068
P3093U24-4B	3192	3345	3639	3639	3804	3855	4257
P3393U24-4B	3345	3498	3804	3804	3960	4011	4446
P3693U24-4B	3498	3651	3960	3960	4125	4176	4635
P3993U24-4B	3651	3804	4119	4119	4281	4332	4824
P4293U24-4B	3804	3957	4281	4281	4440	4491	5010

A-Bristol, Prairie, Savannah15
B-Plateau, Ridgegate, Summerhill
C-Augusta15, Bedford, Charleston15, Easton, Fairway, Gateway, Harbor, Hastings15, Liberty, Seneca, Vicksburg
D-Regency
E-
F-
G-Aspen15, Centennial15, Madison15, Norfolk15, Orleans, Riverton

SEE PAGE 54 FOR DOORS AVAILABLE IN MOLDED & PRICING

CABINET TYPE

PANTRY

96" PANTRY

TWO ADJUSTABLE FULL DEPTH SHELVES IN TOP SECTION
FOUR ADJUSTABLE FULL DEPTH SHELVES IN BOTTOM SECTION
42" MAXIMUM WIDTH
BUTT DOORS INCLUDE TOP AND BOTTOM SECTIONS
TOP DOORS WILL MATCH STYLE USED ON WALL CABINETS

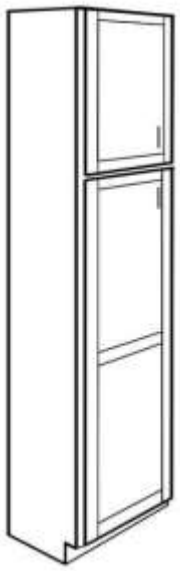

P1896U12R

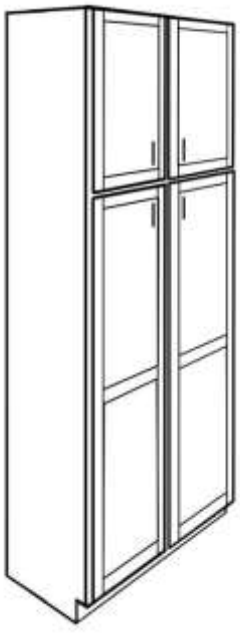

P4296U12-4B

SEE PAGE 27 FOR INFORMATION ON MULTI PANEL DOORS

TOE KICK WILL BE ATTATCHED. ON 96" YOU MUST USE CODE FOR LOOSE TOE IF YOU WANT IT SENT LOOSE.

12" DEEP CABINET	LIST PRICE						
	A	B	C	D	E	F	G
P1296U12L	1773	1926	2166	2166	2328	2379	2544
P1296U12R	1773	1926	2166	2166	2328	2379	2544
P1596U12L	1833	1986	2226	2226	2388	2439	2604
P1596U12R	1833	1986	2226	2226	2388	2439	2604
P1896U12L	1986	2139	2388	2388	2547	2598	2793
P1896U12R	1986	2139	2388	2388	2547	2598	2793
P2196U12L	2139	2292	2547	2547	2709	2760	2982
P2196U12R	2139	2292	2547	2547	2709	2760	2982
P2496U12L	2292	2445	2706	2706	2868	2919	3168
P2496U12R	2292	2445	2706	2706	2868	2919	3168
P2496U12-4B	2676	2829	3105	3105	3267	3318	3624
P2796U12-4B	2829	2982	3264	3264	3426	3477	3804
P3096U12-4B	2982	3135	3420	3420	3585	3636	3993
P3396U12-4B	3135	3288	3585	3585	3741	3792	4182
P3696U12-4B	3288	3441	3741	3741	3900	3951	4368
P3996U12-4B	3441	3594	3900	3900	4062	4113	4557
P4296U12-4B	3594	3747	4062	4062	4221	4272	4746
LOOSE TOE	0.01	0.01	0.01	0.01	0.01	0.01	0.01

24" DEEP CABINET	LIST PRICE						
	A	B	C	D	E	F	G
P1296U24L	2004	2157	2406	2406	2568	2619	2826
P1296U24R	2004	2157	2406	2406	2568	2619	2826
P1596U24L	2064	2217	2466	2466	2628	2679	2886
P1596U24R	2064	2217	2466	2466	2628	2679	2886
P1896U24L	2217	2370	2628	2628	2787	2838	3075
P1896U24R	2217	2370	2628	2628	2787	2838	3075
P2196U24L	2370	2523	2787	2787	2949	3000	3264
P2196U24R	2370	2523	2787	2787	2949	3000	3264
P2496U24L	2523	2676	2946	2946	3108	3159	3453
P2496U24R	2523	2676	2946	2946	3108	3159	3453
P2496U24-4B	2907	3060	3345	3345	3507	3558	3909
P2796U24-4B	3060	3213	3501	3501	3666	3717	4089
P3096U24-4B	3213	3366	3660	3660	3825	3876	4278
P3396U24-4B	3366	3519	3825	3825	3981	4032	4467
P3696U24-4B	3519	3672	3981	3981	4146	4197	4656
P3996U24-4B	3672	3825	4140	4140	4302	4353	4845
P4296U24-4B	3825	3978	4302	4302	4461	4512	5031
LOOSE TOE	0.01	0.01	0.01	0.01	0.01	0.01	0.01

A-Bristol, Prairie, Savannah15
B-Plateau, Ridgegate, Summerhill
C-Augusta15, Bedford, Charleston15, Easton, Fairway, Gateway, Harbor, Hastings15, Liberty, Seneca, Vicksburg
D-Regency
E-
F-
G-Aspen15, Centennial15, Madison15, Norfolk15, Orleans, Riverton

SEE PAGE 54 FOR DOORS AVAILABLE IN MOLDED & PRICING

CABINET TYPE

PANTRY

CHEF PANTRY CABINET - BASE DEPTH

SEE PAGE 27 FOR INFORMATION ON MULTI PANEL DOORS

BUTT DOORS INCLUDE TOP AND BOTTOM SECTIONS

TOP DOORS MATCH STYLE USED ON WALL CABINETS

NO MODIFICATIONS

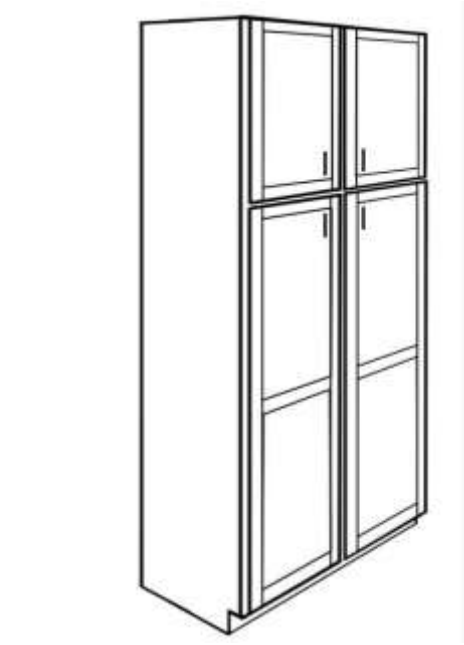



SPECS FOR THIS REV-A-SHELF ITEM ARE ON PAGE 226

PCP3696U24-4B DOES NOT INCLUDE TOP RAIL

TOE KICK WILL BE ATTATCHED. ON 96" YOU MUST USE CODE FOR LOOSE TOE IF YOU WANT IT SENT LOOSE.

24" DEEP CABINET	LIST PRICE						
	A	B	C	D	E	F	G
PCP3684U24-4B	10849	11002	11293	11293	11455	11506	11884
PCP3690U24-4B	11068	11221	11521	11521	11686	11737	12154
PCP3693U24-4B	11284	11437	11746	11746	11911	11962	12421
PCP3696U24-4B	11305	11458	11767	11767	11932	11983	12442
LOOSE TOE	0.01	0.01	0.01	0.01	0.01	0.01	0.01

A-Bristol, Prairie, Savannah15
B-Plateau, Ridgegate, Summerhill
C-Augusta15, Bedford, Charleston15, Easton, Fairway, Gateway, Harbor, Hastings15, Liberty, Seneca, Vicksburg
D-Regency
E-
F-
G-Aspen15, Centennial15, Madison15, Norfolk15, Orleans, Riverton

SEE PAGE 54 FOR DOORS AVAILABLE IN MOLDED & PRICING

CABINET TYPE — PANTRY

PANTRY BROOM CLOSET

84", 90", 93" OR 96" TALL
NO TOP SHELF IN 84" TALL - ONE FULL DEPTH SHELF IN TOP OF 90" AND 93"
TWO FULL DEPTH SHELVES IN TOP OF 96"
NO SHELVES IN LOWER SECTION
TOP DOORS WILL MATCH STYLE USED ON WALL CABS

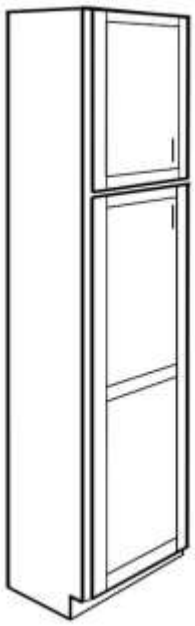

PBC1884U12R

SEE PAGE 27 FOR INFORMATION ON MULTI PANEL DOORS

TOE KICK WILL BE ATTATCHED. ON 96" YOU MUST USE CODE FOR LOOSE TOE IF YOU WANT IT SENT LOOSE.

12" DEEP CABINET	LIST PRICE						
	A	B	C	D	E	F	G
PBC1584U12L	1380	1533	1755	1755	1914	1965	2046
PBC1584U12R	1380	1533	1755	1755	1914	1965	2046
PBC1884U12L	1533	1686	1914	1914	2073	2124	2235
PBC1884U12R	1533	1686	1914	1914	2073	2124	2235
PBC1590U12L	1599	1752	1983	1983	2127	2178	2319
PBC1590U12R	1599	1752	1983	1983	2127	2178	2319
PBC1890U12L	1752	1905	2142	2142	2301	2352	2508
PBC1890U12R	1752	1905	2142	2142	2301	2352	2508
PBC1593U12L	1812	1965	2205	2205	2367	2418	2583
PBC1593U12R	1812	1965	2205	2205	2367	2418	2583
PBC1893U12L	1965	2118	2367	2367	2526	2577	2772
PBC1893U12R	1965	2118	2367	2367	2526	2577	2772
PBC1596U12L	1833	1986	2226	2226	2388	2439	2604
PBC1596U12R	1833	1986	2226	2226	2388	2439	2604
PBC1896U12L	1986	2139	2388	2388	2547	2598	2793
PBC1896U12R	1986	2139	2388	2388	2547	2598	2793
LOOSE TOE	0.01	0.01	0.01	0.01	0.01	0.01	0.01

24" DEEP CABINET	LIST PRICE						
	A	B	C	D	E	F	G
PBC1584U24L	1608	1761	1992	1992	2154	2205	2331
PBC1584U24R	1608	1761	1992	1992	2154	2205	2331
PBC1884U24L	1761	1914	2154	2154	2316	2367	2520
PBC1884U24R	1761	1914	2154	2154	2316	2367	2520
PBC1590U24L	1827	1980	2223	2223	2382	2433	2601
PBC1590U24R	1827	1980	2223	2223	2382	2433	2601
PBC1890U24L	1980	2133	2382	2382	2547	2598	2790
PBC1890U24R	1980	2133	2382	2382	2547	2598	2790
PBC1593U24L	2043	2196	2445	2445	2607	2658	2865
PBC1593U24R	2043	2196	2445	2445	2607	2658	2865
PBC1893U24L	2196	2349	2607	2607	2766	2817	3054
PBC1893U24R	2196	2349	2607	2607	2766	2817	3054
PBC1596U24L	2064	2217	2466	2466	2628	2679	2886
PBC1596U24R	2064	2217	2466	2466	2628	2679	2886
PBC1896U24L	2217	2370	2628	2628	2787	2838	3075
PBC1896U24R	2217	2370	2628	2628	2787	2838	3075
LOOSE TOE	0.01	0.01	0.01	0.01	0.01	0.01	0.01

A-Bristol, Prairie, Savannah15
B-Plateau, Ridgegate, Summerhill
C-Augusta15, Bedford, Charleston15, Easton, Fairway, Gateway, Harbor, Hastings15, Liberty, Seneca, Vicksburg
D-Regency
E-
F-
G-Aspen15, Centennial15, Madison15, Norfolk15, Orleans, Riverton

SEE PAGE 54 FOR DOORS AVAILABLE IN MOLDED & PRICING

CABINET TYPE

PANTRY

84", 90", 93" & 96" TALL PANTRY W/ 3 DRWS AT 34 1/2" TALL

84", 90" & 93" HAVE THREE ADJUSTABLE FULL DEPTH SHELVES IN TOP SECTION
96" HAS FOUR ADJUSTABLE FULL DEPTH SHELVES IN TOP SECTION
DRAWERS WILL BE AT 34 1/2" HEIGHT
1 - 4 1/2" DRAWER & 2 - 9 1/2" DRAWERS



PD1584-3L

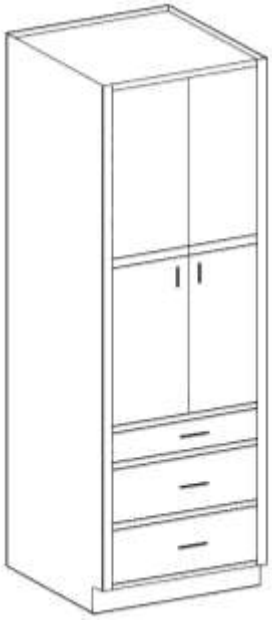

PD2484-3-2B

SEE PAGE 27 FOR INFORMATION ON MULTI PANEL DOORS

TOE KICK WILL BE ATTATCHED. ON 96" YOU MUST USE CODE FOR LOOSE TOE IF YOU WANT IT SENT LOOSE.

84" TALL PANTRY W/ 3 DRAWERS

24" DEEP CABINET	LIST PRICE						
	A	B	C	D	E	F	G
PD1584-3L	3630	3654	3849	3849	3903	4020	4455
PD1584-3R	3630	3654	3849	3849	3903	4020	4455
PD1884-3L	3705	3732	3981	3981	4038	4161	4614
PD1884-3R	3705	3732	3981	3981	4038	4161	4614
PD2184-3L	3783	3807	4119	4119	4170	4305	4770
PD2184-3R	3783	3807	4119	4119	4170	4305	4770
PD2484-3L	3987	4011	4251	4251	4302	4440	4929
PD2484-3R	3987	4011	4251	4251	4302	4440	4929
PD2484-3-2B	4371	4395	4650	4650	4701	4860	5394
PD2784-3-2B	4422	4446	4701	4701	4752	4911	5445
PD3084-3-2B	4575	4599	4860	4860	4914	5079	5634
PD3384-3-2B	4728	4752	5013	5013	5067	5232	5787
PD3684-3-2B	4881	4905	5166	5166	5220	5385	5940

90" TALL PANTRY W/ 3 DRAWERS

24" DEEP CABINET	LIST PRICE						
	A	B	C	D	E	F	G
PD1590-3L	3756	3783	3987	3987	4038	4161	4614
PD1590-3R	3756	3783	3987	3987	4038	4161	4614
PD1890-3L	3834	3858	4119	4119	4170	4305	4770
PD1890-3R	3834	3858	4119	4119	4170	4305	4770
PD2190-3L	3909	3936	4251	4251	4302	4440	4929
PD2190-3R	3909	3936	4251	4251	4302	4440	4929
PD2490-3L	4113	4140	4383	4383	4434	4581	5088
PD2490-3R	4113	4140	4383	4383	4434	4581	5088
PD2490-3-2B	4497	4524	4782	4782	4833	5001	5553
PD2790-3-2B	4548	4575	4833	4833	4884	5055	5604
PD3090-3-2B	4701	4728	4992	4992	5049	5223	5793
PD3390-3-2B	4863	4887	5148	5148	5202	5367	5946
PD3690-3-2B	5016	5040	5301	5301	5355	5520	6099

93" TALL PANTRY W/ 3 DRAWERS

24" DEEP CABINET	LIST PRICE						
	A	B	C	D	E	F	G
PD1593-3L	3885	3909	4119	4119	4170	4305	4770
PD1593-3R	3885	3909	4119	4119	4170	4305	4770
PD1893-3L	3960	3987	4251	4251	4302	4440	4929
PD1893-3R	3960	3987	4251	4251	4302	4440	4929
PD2193-3L	4038	4062	4383	4383	4434	4581	5088
PD2193-3R	4038	4062	4383	4383	4434	4581	5088
PD2493-3L	4242	4266	4515	4515	4566	4725	5244
PD2493-3R	4242	4266	4515	4515	4566	4725	5244
PD2493-3-2B	4626	4650	4914	4914	4965	5139	5712
PD2793-3-2B	4677	4701	4965	4965	5016	5190	5763
PD3093-3-2B	4830	4854	5124	5124	5181	5358	5952
PD3393-3-2B	4998	5022	5283	5283	5337	5502	6105
PD3693-3-2B	5151	5175	5436	5436	5490	5655	6258

96" TALL PANTRY W/ 3 DRAWERS

24" DEEP CABINET	LIST PRICE						
	A	B	C	D	E	F	G
PD1596-3L	3906	3930	4140	4140	4191	4326	4791
PD1596-3R	3906	3930	4140	4140	4191	4326	4791
PD1896-3L	3981	4008	4272	4272	4323	4461	4950
PD1896-3R	3981	4008	4272	4272	4323	4461	4950
PD2196-3L	4059	4083	4404	4404	4455	4602	5109
PD2196-3R	4059	4083	4404	4404	4455	4602	5109
PD2496-3L	4263	4287	4536	4536	4587	4746	5265
PD2496-3R	4263	4287	4536	4536	4587	4746	5265
PD2496-3-2B	4647	4671	4935	4935	4986	5160	5733
PD2796-3-2B	4698	4722	4986	4986	5037	5211	5784
PD3096-3-2B	4851	4875	5145	5145	5202	5379	5973
PD3396-3-2B	5019	5043	5304	5304	5358	5523	6126
PD3696-3-2B	5172	5196	5457	5457	5511	5676	6279
LOOSE TOE	0.01	0.01	0.01	0.01	0.01	0.01	0.01

A-Bristol, Prairie, Savannah15
B-Plateau, Ridgegate, Summerhill
C-Augusta15, Bedford, Charleston15, Easton, Fairway, Gateway, Harbor, Hastings15, Liberty, Seneca, Vicksburg
D-Regency
E-
F-
G-Aspen15, Centennial15, Madison15, Norfolk15, Orleans, Riverton

SEE PAGE 54 FOR DOORS AVAILABLE IN MOLDED & PRICING

CABINET TYPE

PANTRY

84", 90", 93" & 96" TALL PANTRY W/ 34 1/2" TALL LOWER SECTION

LOWER SECTION IS 34 1/2" TALL

84", 90" & 93" HAVE THREE ADJUSTABLE FULL DEPTH SHELVES IN TOP SECTION
96" HAS FOUR ADJUSTABLE FULL DEPTH SHELVES IN TOP SECTION
84", 90", 93" & 96" HAVE ONE ADJUSTABLE FULL DEPTH SHELF IN BOTTOM SECTION

DRAWER IS 4 1/2" TALL

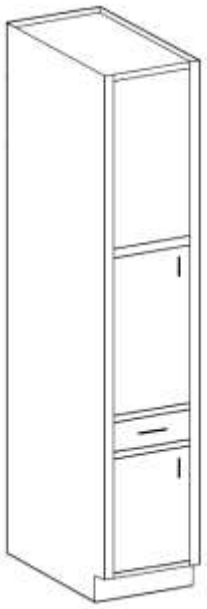

PD1584-1L



PD3384-1-4B

SEE PAGE 27 FOR INFORMATION ON MULTI PANEL DOORS

84" TALL PANTRY W/ 1 DRAWER

24" DEEP CABINET	LIST PRICE						
	A	B	C	D	E	F	G
PD1584-1L	3450	3474	3669	3669	3723	3840	4275
PD1584-1R	3450	3474	3669	3669	3723	3840	4275
PD1884-1L	3525	3552	3801	3801	3858	3981	4434
PD1884-1R	3525	3552	3801	3801	3858	3981	4434
PD2184-1L	3603	3627	3939	3939	3990	4125	4590
PD2184-1R	3603	3627	3939	3939	3990	4125	4590
PD2484-1L	3807	3831	4071	4071	4122	4260	4749
PD2484-1R	3807	3831	4071	4071	4122	4260	4749
PD2484-1-4B	4242	4266	4521	4521	4572	4731	5265
PD2784-1-4B	4293	4317	4572	4572	4623	4782	5316
PD3084-1-4B	4446	4470	4731	4731	4785	4950	5505
PD3384-1-4B	4599	4623	4884	4884	4938	5103	5658
PD3684-1-4B	4752	4776	5037	5037	5091	5256	5811

90" TALL PANTRY W/ 1 DRAWER

24" DEEP CABINET	LIST PRICE						
	A	B	C	D	E	F	G
PD1590-1L	3576	3603	3807	3807	3858	3981	4434
PD1590-1R	3576	3603	3807	3807	3858	3981	4434
PD1890-1L	3654	3678	3939	3939	3990	4125	4590
PD1890-1R	3654	3678	3939	3939	3990	4125	4590
PD2190-1L	3729	3756	4071	4071	4122	4260	4749
PD2190-1R	3729	3756	4071	4071	4122	4260	4749
PD2490-1L	3933	3960	4203	4203	4254	4401	4908
PD2490-1R	3933	3960	4203	4203	4254	4401	4908
PD2490-1-4B	4368	4395	4653	4653	4704	4872	5424
PD2790-1-4B	4419	4446	4704	4704	4755	4926	5475
PD3090-1-4B	4572	4599	4863	4863	4920	5094	5664
PD3390-1-4B	4734	4758	5019	5019	5073	5238	5817
PD3690-1-4B	4887	4911	5172	5172	5226	5391	5970

93" TALL PANTRY W/ 1 DRAWER

24" DEEP CABINET	LIST PRICE						
	A	B	C	D	E	F	G
PD1593-1L	3705	3729	3939	3939	3990	4125	4590
PD1593-1R	3705	3729	3939	3939	3990	4125	4590
PD1893-1L	3780	3807	4071	4071	4122	4260	4749
PD1893-1R	3780	3807	4071	4071	4122	4260	4749
PD2193-1L	3858	3882	4203	4203	4254	4401	4908
PD2193-1R	3858	3882	4203	4203	4254	4401	4908
PD2493-1L	4062	4086	4335	4335	4386	4545	5064
PD2493-1R	4062	4086	4335	4335	4386	4545	5064
PD2493-1-4B	4497	4521	4785	4785	4836	5010	5583
PD2793-1-4B	4548	4572	4836	4836	4887	5061	5634
PD3093-1-4B	4701	4725	4995	4995	5052	5229	5823
PD3393-1-4B	4869	4893	5154	5154	5208	5373	5976
PD3693-1-4B	5022	5046	5307	5307	5361	5526	6129

96" TALL PANTRY W/ 1 DRAWER

24" DEEP CABINET	LIST PRICE						
	A	B	C	D	E	F	G
PD1596-1L	3726	3750	3960	3960	4011	4146	4611
PD1596-1R	3726	3750	3960	3960	4011	4146	4611
PD1896-1L	3801	3828	4092	4092	4143	4281	4770
PD1896-1R	3801	3828	4092	4092	4143	4281	4770
PD2196-1L	3879	3903	4224	4224	4275	4422	4929
PD2196-1R	3879	3903	4224	4224	4275	4422	4929
PD2496-1L	4083	4107	4356	4356	4407	4566	5085
PD2496-1R	4083	4107	4356	4356	4407	4566	5085
PD2496-1-4B	4518	4542	4806	4806	4857	5031	5604
PD2796-1-4B	4569	4593	4857	4857	4908	5082	5655
PD3096-1-4B	4722	4746	5016	5016	5073	5250	5844
PD3396-1-4B	5025	5049	5310	5310	5364	5529	6156
PD3696-1-4B	5178	5202	5463	5463	5517	5682	6309
LOOSE TOE	0.01	0.01	0.01	0.01	0.01	0.01	0.01

A-Bristol, Prairie, Savannah15
B-Plateau, Ridgegate, Summerhill
C-Augusta15, Bedford, Charleston15, Easton, Fairway, Gateway, Harbor, Hastings15, Liberty, Seneca, Vicksburg
D-Regency
E-
F-
G-Aspen15, Centennial15, Madison15, Norfolk15, Orleans, Riverton

SEE PAGE 54 FOR DOORS AVAILABLE IN MOLDED & PRICING

CABINET TYPE

PANTRY

84" & 90" TALL INVERTED PANTRY W/ 34 1/2" TALL LOWER SECTION

LOWER SECTION IS 34 1/2" TALL
84" HAS THREE ADJUSTABLE FULL DEPTH SHELVES IN TOP SECTION
84" HAS TWO ADJUSTABLE FULL DEPTH SHELVES IN BOTTOM SECTION

90" HAS THREE ADJUSTABLE FULL DEPTH SHELVES IN TOP SECTION
90" HAS TWO ADJUSTABLE FULL DEPTH SHELVES IN BOTTOM SECTION



PIV1584L

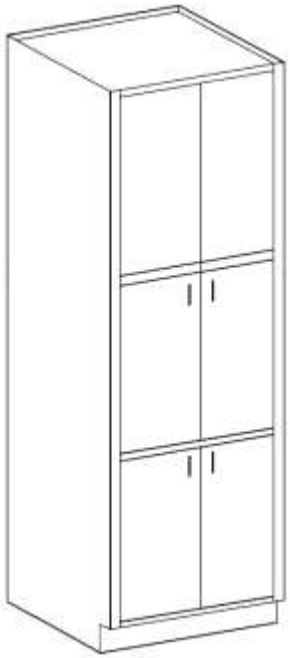

PIV3084-4B

SEE PAGE 27 FOR INFORMATION ON MULTI PANEL DOORS

84" TALL INVERTED PANTRY

24" DEEP CABINET	LIST PRICE						
	A	B	C	D	E	F	G
PIV1584L	3297	3321	3516	3516	3570	3687	4122
PIV1584R	3297	3321	3516	3516	3570	3687	4122
PIV1884L	3372	3399	3648	3648	3705	3828	4281
PIV1884R	3372	3399	3648	3648	3705	3828	4281
PIV2184L	3450	3474	3786	3786	3837	3972	4437
PIV2184R	3450	3474	3786	3786	3837	3972	4437
PIV2484L	3654	3678	3918	3918	3969	4107	4596
PIV2484R	3654	3678	3918	3918	3969	4107	4596
PIV2484-4B	4089	4113	4368	4368	4419	4578	5112
PIV2784-4B	4140	4164	4419	4419	4470	4629	5163
PIV3084-4B	4293	4317	4578	4578	4632	4797	5352
PIV3384-4B	4446	4470	4731	4731	4785	4950	5505
PIV3684-4B	4599	4623	4884	4884	4938	5103	5658

90" TALL INVERTED PANTRY

24" DEEP CABINET	LIST PRICE						
	A	B	C	D	E	F	G
PIV1590L	3423	3450	3654	3654	3705	3828	4281
PIV1590R	3423	3450	3654	3654	3705	3828	4281
PIV1890L	3501	3525	3786	3786	3837	3972	4437
PIV1890R	3501	3525	3786	3786	3837	3972	4437
PIV2190L	3576	3603	3918	3918	3969	4107	4596
PIV2190R	3576	3603	3918	3918	3969	4107	4596
PIV2490L	3780	3807	4050	4050	4101	4248	4755
PIV2490R	3780	3807	4050	4050	4101	4248	4755
PIV2490-4B	4215	4242	4500	4500	4551	4719	5271
PIV2790-4B	4266	4293	4551	4551	4602	4773	5322
PIV3090-4B	4419	4446	4710	4710	4767	4941	5511
PIV3390-4B	4581	4605	4866	4866	4920	5085	5664
PIV3690-4B	4734	4758	5019	5019	5073	5238	5817

A-Bristol, Prairie, Savannah15
B-Plateau, Ridgegate, Summerhill
C-Augusta15, Bedford, Charleston15, Easton, Fairway, Gateway, Harbor, Hastings15, Liberty, Seneca, Vicksburg
D-Regency
E-
F-
G-Aspen15, Centennial15, Madison15, Norfolk15, Orleans, Riverton

SEE PAGE 54 FOR DOORS AVAILABLE IN MOLDED & PRICING

CABINET TYPE — PANTRY

93" & 96" TALL INVERTED PANTRY W/ 34 1/2" LOWER SECTION

LOWER SECTION IS 34 1/2" HEIGHT

93" HAS THREE ADJUSTABLE FULL DEPTH SHELVES IN TOP SECTION
93" HAS TWO ADJUSTABLE FULL DEPTH SHELVES IN BOTTOM SECTION

96" HAS FOUR ADJUSTABLE FULL DEPTH SHELVES IN TOP SECTION
96" HAS TWO ADJUSTABLE FULL DEPTH SHELVES IN BOTTOM SECTION



PIV1593L



PIV2493-4B

SEE PAGE 27 FOR INFORMATION ON MULTI PANEL DOORS

TOE KICK WILL BE ATTATCHED. ON 96" YOU MUST USE CODE FOR LOOSE TOE IF YOU WANT IT SENT LOOSE.

93" TALL INVERTED PANTRY

24" DEEP CABINET	LIST PRICE						
	A	B	C	D	E	F	G
PIV1593L	3552	3576	3786	3786	3837	3972	4437
PIV1593R	3552	3576	3786	3786	3837	3972	4437
PIV1893L	3627	3654	3918	3918	3969	4107	4596
PIV1893R	3627	3654	3918	3918	3969	4107	4596
PIV2193L	3705	3729	4050	4050	4101	4248	4755
PIV2193R	3705	3729	4050	4050	4101	4248	4755
PIV2493L	3909	3933	4182	4182	4233	4392	4911
PIV2493R	3909	3933	4182	4182	4233	4392	4911
PIV2493-4B	4344	4368	4632	4632	4683	4857	5430
PIV2793-4B	4395	4419	4683	4683	4734	4908	5481
PIV3093-4B	4548	4572	4842	4842	4899	5076	5670
PIV3393-4B	4716	4740	5001	5001	5055	5220	5823
PIV3693-4B	4869	4893	5154	5154	5208	5373	5976

96" TALL INVERTED PANTRY

24" DEEP CABINET	LIST PRICE						
	A	B	C	D	E	F	G
PIV1596L	3573	3597	3807	3807	3858	3993	4458
PIV1596R	3573	3597	3807	3807	3858	3993	4458
PIV1896L	3648	3675	3939	3939	3990	4128	4617
PIV1896R	3648	3675	3939	3939	3990	4128	4617
PIV2196L	3726	3750	4071	4071	4122	4269	4776
PIV2196R	3726	3750	4071	4071	4122	4269	4776
PIV2496L	3930	3954	4203	4203	4254	4413	4932
PIV2496R	3930	3954	4203	4203	4254	4413	4932
PIV2496-4B	4365	4389	4653	4653	4704	4878	5451
PIV2796-4B	4416	4440	4704	4704	4755	4929	5502
PIV3096-4B	4569	4593	4863	4863	4920	5097	5691
PIV3396-4B	4872	4896	5157	5157	5211	5376	6003
PIV3696-4B	5025	5049	5310	5310	5364	5529	6156
LOOSE TOE	0.01	0.01	0.01	0.01	0.01	0.01	0.01

A-Bristol, Prairie, Savannah15
B-Plateau, Ridgegate, Summerhill
C-Augusta15, Bedford, Charleston15, Easton, Fairway, Gateway, Harbor, Hastings15, Liberty, Seneca, Vicksburg
D-Regency
E-
F-
G-Aspen15, Centennial15, Madison15, Norfolk15, Orleans, Riverton

SEE PAGE 54 FOR DOORS AVAILABLE IN MOLDED & PRICING

CABINET TYPE

PANTRY

ANGLED BASE DEPTH UTILITY END

SEE PAGE 27 FOR INFORMATION ON MULTI PANEL DOORS
NO SHELF IN TOP SECTION OF 84" TALL
ONE ADJUSTABLE SHELF IN TOP SECTION OF 90" AND 93" TALL
TWO ADJUSTABLE SHELVES IN TOP OF 96" TALL
FOUR ADJUSTABLE SHELVES IN BOTTOM SECTION
2 1/2" STILES

84", 90", 93",
AND 96" TALL

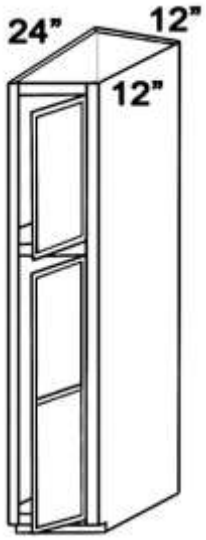

PAUE1293R

TOE KICK WILL BE ATTATCHED. ON 96" YOU MUST USE CODE FOR LOOSE TOE IF YOU WANT IT SENT LOOSE.

24" DEEP CABINET	LIST PRICE						
	A	B	C	D	E	F	G
PAUE1284L	5097	5148	5358	5358	5412	6036	6255
PAUE1284R	5097	5148	5358	5358	5412	6036	6255
PAUE1290L	5226	5250	5496	5496	5547	6195	6423
PAUE1290R	5226	5250	5496	5496	5547	6195	6423
PAUE1293L	5229	5391	5658	5658	5667	6339	6276
PAUE1293R	5229	5391	5658	5658	5667	6339	6276
PAUE1296L	5379	5505	5736	5736	5787	6474	6717
PAUE1296R	5379	5505	5736	5736	5787	6474	6717
LOOSE TOE	0.01	0.01	0.01	0.01	0.01	0.01	0.01

A-Bristol, Prairie, Savannah15
B-Plateau, Ridgegate, Summerhill
C-Augusta15, Bedford, Charleston15, Easton, Fairway, Gateway, Harbor, Hastings15, Liberty, Seneca, Vicksburg

D-Regency
E-
F-
G-Aspen15, Centennial15, Madison15, Norfolk15, Orleans, Riverton

SEE PAGE 54 FOR DOORS AVAILABLE IN MOLDED & PRICING

CABINET TYPE

PANTRY

WALK THRU PANTRY

SEE PAGE 27 FOR INFORMATION ON MULTI PANEL DOORS
FINISHED INTERIOR. WALK THRU SECTION OF 84" TALL WILL BE 81" TALL. WALK THRU SECTION OF 90", 93" AND 96" TALL WILL BE 78" TALL

NO BOTTOM RAIL OR FLOOR

THE 84" TALL PANTY WILL HAVE ONE TALL OPENING. THE DOORS WILL HAVE A 3 1/2 " TOP, MIDDLE AND BOTTOM RAIL. THE 90", 93", & 96" TALL PANTRY DOOR WILL ALSO HAVE A 3 1/2 " TOP, MIDDLE AND BOTTOM RAIL ON LOWER SECTION. THE TOP SECTION WILL HAVE THE STANDARD STILE AND RAIL SIZE FOR THE DOOR STYLE CHOSEN.

FOR IN SWING PANTRY DOORS, USE MODIFICATION 'WALKTHRU INSWING'

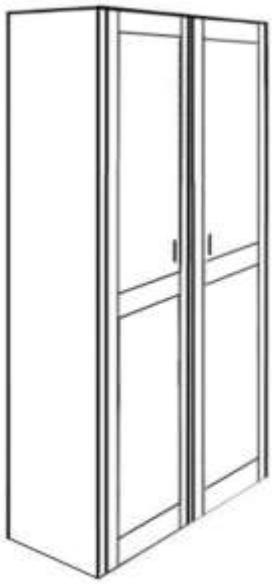

PWT3384-2B



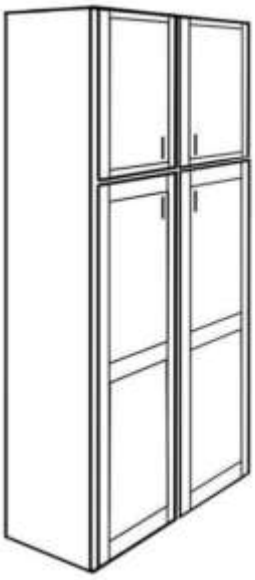

PWT3093-4B

24" DEEP CABINET	LIST PRICE						
	A	B	C	D	E	F	G
PWT3084-2B	6408	6456	6651	6651	6816	6867	7269
PWT3384-2B	6357	6405	6600	6600	6765	6816	7218
PWT3684-2B	6510	6558	6753	6753	6918	6969	7371
PWT3090-4B	6618	6666	6861	6861	7026	7077	7479
PWT3390-4B	6771	6819	7014	7014	7179	7230	7632
PWT3690-4B	6924	6972	7167	7167	7332	7383	7785
PWT3093-4B	6726	6774	6969	6969	7134	7185	7587
PWT3393-4B	6879	6927	7122	7122	7287	7338	7740
PWT3693-4B	7032	7080	7275	7275	7440	7491	7893
PWT3096-4B	6762	6810	7005	7005	7170	7221	7623
PWT3396-4B	6915	6963	7158	7158	7323	7374	7776
PWT3696-4B	7068	7116	7311	7311	7476	7527	7929

A-Bristol, Prairie, Savannah15
B-Plateau, Ridgegate, Summerhill
C-Augusta15, Bedford, Charleston15, Easton, Fairway, Gateway, Harbor, Hastings15, Liberty, Seneca, Vicksburg

D-Regency
E-
F-
G-Aspen15, Centennial15, Madison15, Norfolk15, Orleans, Riverton

SEE PAGE 54 FOR DOORS AVAILABLE IN MOLDED & PRICING

CABINET TYPE — PANTRY

PANTRY BASE DEPTH W/5 ADJ ROLLOUTS

SEE PAGE 27 FOR INFORMATION ON MULTI PANEL DOORS
NO SHELF IN TOP SECTION OF 84" - 1 FULL DEPTH SHELF IN 90", 93", & 96"
5 DOVETAIL ADJ ROLLOUTS - 3 1/2" TALL
36" MAXIMUM WIDTH
TOP DOORS MATCH STYLE ON WALL CABINETS
BUTT DOORS INCLUDE TOP & BOTTOM SECTIONS
96" TALL - MUST SPECIFY IF TOE KICK IS LOOSE OR ATTACHED

MINIMUM WIDTH OF ROLLOUTS IS 15" - NO MODIFICATIONS

DRAWER BOX, ROLLOUTS AND TRACK WILL MATCH PER ORDER.
DRAWER BOX/TRACK SELETION UPCHARGES WILL APPLY.

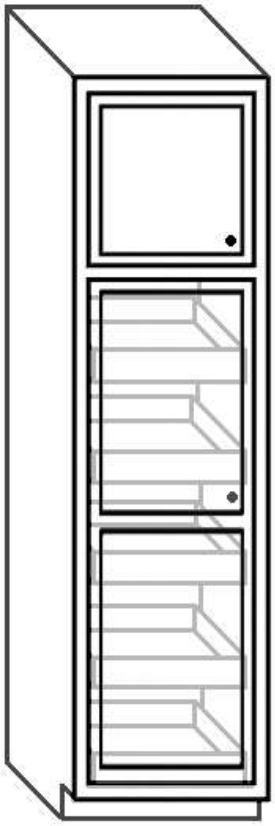

P1596U24-5RL

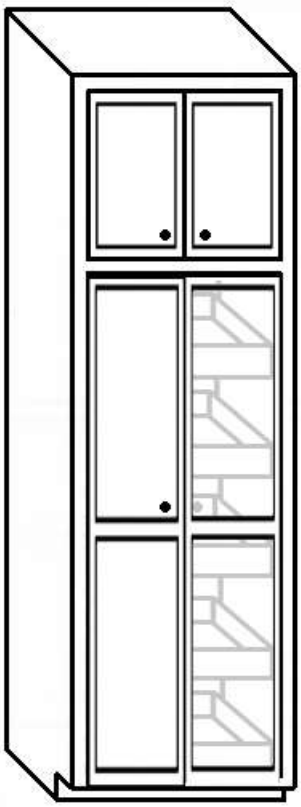

P2496U24-5R-4B

TO PROTECT THE DOOR FROM SCRATCHES, BUMPERS WILL BE INSTALLED ON THE ROLLOUT SIDE THAT IS AGAINST THE DOOR. THIS WILL BE ON ALL STANDARD OVERLAY ROLLOUTS AND ON MODIFIED FULL OVERLAY ROLLOUTS WHERE SPACE ALLOWS.

TOE KICK WILL BE ATTATCHED. ON 96" YOU MUST USE CODE FOR LOOSE TOE IF YOU WANT IT SENT LOOSE.

24" DEEP CABINET	LIST PRICE						
	A	B	C	D	E	F	G
P1584U24-5RL	3408	3561	3792	3792	3954	4005	4131
P1584U24-5RR	3408	3561	3792	3792	3954	4005	4131
P1884U24-5RL	3561	3714	3954	3954	4116	4167	4320
P1884U24-5RR	3561	3714	3954	3954	4116	4167	4320
P2184U24-5RL	3714	3867	4113	4113	4275	4326	4509
P2184U24-5RR	3714	3867	4113	4113	4275	4326	4509
P2484U24-5RL	3867	4020	4272	4272	4434	4485	4698
P2484U24-5RR	3867	4020	4272	4272	4434	4485	4698
P2484U24-5R-4B	4251	4404	4668	4668	4833	4884	5154
P2784U24-5R-4B	4404	4557	4827	4827	4992	5043	5331
P3084U24-5R-4B	4557	4710	4992	4992	5148	5199	5520
P3384U24-5R-4B	4710	4863	5148	5148	5307	5358	5709
P3684U24-5R-4B	4863	5016	5307	5307	5469	5520	5898
P1590U24-5RL	3627	3780	4023	4023	4182	4233	4401
P1590U24-5RR	3627	3780	4023	4023	4182	4233	4401
P1890U24-5RL	3780	3933	4182	4182	4347	4398	4590
P1890U24-5RR	3780	3933	4182	4182	4347	4398	4590
P2190U24-5RL	3933	4086	4341	4341	4506	4557	4779
P2190U24-5RR	3933	4086	4341	4341	4506	4557	4779
P2490U24-5RL	4086	4239	4503	4503	4662	4713	4968
P2490U24-5RR	4086	4239	4503	4503	4662	4713	4968
P2490U24-5R-4B	4470	4623	4899	4899	5061	5112	5424
P2790U24-5R-4B	4623	4776	5058	5058	5220	5271	5604
P3090U24-5R-4B	4776	4929	5220	5220	5379	5430	5790
P3390U24-5R-4B	4929	5082	5379	5379	5535	5586	5979
P3690U24-5R-4B	5082	5235	5535	5535	5700	5751	6168
P1593U24-5RL	3843	3996	4245	4245	4407	4458	4665
P1593U24-5RR	3843	3996	4245	4245	4407	4458	4665
P1893U24-5RL	3996	4149	4407	4407	4566	4617	4854
P1893U24-5RR	3996	4149	4407	4407	4566	4617	4854
P2193U24-5RL	4149	4302	4566	4566	4728	4779	5043
P2193U24-5RR	4149	4302	4566	4566	4728	4779	5043
P2493U24-5RL	4302	4455	4725	4725	4887	4938	5232
P2493U24-5RR	4302	4455	4725	4725	4887	4938	5232
P2493U24-5R-4B	4686	4839	5124	5124	5286	5337	5688
P2793U24-5R-4B	4839	4992	5280	5280	5445	5496	5868
P3093U24-5R-4B	4992	5145	5439	5439	5604	5655	6057
P3393U24-5R-4B	5145	5298	5604	5604	5760	5811	6246
P3693U24-5R-4B	5298	5451	5760	5760	5925	5976	6435
P1596U24-5RL	3864	4017	4266	4266	4428	4479	4686
P1596U24-5RR	3864	4017	4266	4266	4428	4479	4686
P1896U24-5RL	4017	4170	4428	4428	4587	4638	4875
P1896U24-5RR	4017	4170	4428	4428	4587	4638	4875
P2196U24-5RL	4170	4323	4587	4587	4749	4800	5064
P2196U24-5RR	4170	4323	4587	4587	4749	4800	5064
P2496U24-5RL	4323	4476	4746	4746	4908	4959	5253
P2496U24-5RR	4323	4476	4746	4746	4908	4959	5253
P2496U24-5R-4B	4707	4860	5145	5145	5307	5358	5709
P2796U24-5R-4B	4860	5013	5301	5301	5466	5517	5889
P3096U24-5R-4B	5013	5166	5460	5460	5625	5676	6078
P3396U24-5R-4B	5166	5319	5625	5625	5781	5832	6267
P3696U24-5R-4B	5319	5472	5781	5781	5946	5997	6456
LOOSE TOE	0.01	0.01	0.01	0.01	0.01	0.01	0.01

A-Bristol, Prairie, Savannah15
B-Plateau, Ridgegate, Summerhill
C-Augusta15, Bedford, Charleston15, Easton, Fairway, Gateway, Harbor, Hastings15, Liberty, Seneca, Vicksburg
D-Regency
E-
F-
G-Aspen15, Centennial15, Madison15, Norfolk15, Orleans, Riverton

SEE PAGE 54 FOR DOORS AVAILABLE IN MOLDED & PRICING

CABINET TYPE — PANTRY

84", 90", 93", & 96" TALL PANTRY FRONT

SEE PAGE 27 FOR INFORMATION ON MULTI PANEL DOORS
5 3/4" FLUSH TOE KICK
1 3/4" STILES
1 3/4" RAILS
1 1/2" STILES AND RAILS NOT AVAILABLE



PF1584L



PF2484-4B

CABINET	LIST PRICE						
	A	B	C	D	E	F	G
PF1584L	879	972	1104	1104	1200	1227	1332
PF1584R	879	972	1104	1104	1200	1227	1332
PF1884L	972	1062	1200	1200	1296	1305	1449
PF1884R	972	1062	1200	1200	1296	1305	1449
PF2184L	1062	1155	1296	1296	1392	1410	1569
PF2184R	1062	1155	1296	1296	1392	1410	1569
PF2484L	1155	1245	1392	1392	1584	1602	1806
PF2484R	1155	1245	1392	1392	1584	1602	1806
PF2484-4B	1416	1509	1662	1662	1758	1803	2001
PF2784-4B	1620	1713	1866	1866	1962	2013	2205
PF3084-4B	1713	1803	1962	1962	2058	2118	2325
PF3384-4B	1803	1896	2058	2058	2154	2223	2442
PF3684-4B	1896	1986	2154	2154	2247	2328	2559
PF3984-4B	1986	2079	2247	2247	2343	2433	2676
PF4284-4B	2079	2172	2343	2343	2442	2538	2799
PF1590L	1083	1176	1308	1308	1404	1437	1536
PF1590R	1083	1176	1308	1308	1404	1437	1536
PF1890L	1176	1266	1404	1404	1500	1515	1653
PF1890R	1176	1266	1404	1404	1500	1515	1653
PF2190L	1266	1359	1500	1500	1596	1620	1773
PF2190R	1266	1359	1500	1500	1596	1620	1773
PF2490L	1359	1449	1596	1596	1788	1836	1926
PF2490R	1359	1449	1596	1596	1788	1836	1926
PF2490-4B	1620	1713	1866	1866	1962	2013	2205
PF2790-4B	1824	1917	2070	2070	2166	2223	2409
PF3090-4B	1917	2007	2166	2166	2262	2328	2529
PF3390-4B	2007	2100	2262	2262	2358	2433	2646
PF3690-4B	2100	2190	2358	2358	2451	2538	2763
PF3990-4B	2190	2283	2451	2451	2547	2643	2880
PF4290-4B	2283	2376	2547	2547	2646	2748	3003
PF1593L	1287	1380	1512	1512	1608	1620	1740
PF1593R	1287	1380	1512	1512	1608	1620	1740
PF1893L	1380	1470	1608	1608	1704	1725	1857
PF1893R	1380	1470	1608	1608	1704	1725	1857
PF2193L	1470	1563	1704	1704	1800	1830	1977
PF2193R	1470	1563	1704	1704	1800	1830	1977
PF2493L	1563	1653	1800	1800	1992	2025	2094
PF2493R	1563	1653	1800	1800	1992	2025	2094
PF2493-4B	1824	1917	2070	2070	2166	2223	2409
PF2793-4B	2028	2121	2274	2274	2370	2433	2613
PF3093-4B	2121	2211	2370	2370	2466	2538	2733
PF3393-4B	2211	2304	2466	2466	2562	2643	2850
PF3693-4B	2304	2394	2562	2562	2655	2748	2967
PF3993-4B	2394	2487	2655	2655	2751	2853	3084
PF4293-4B	2487	2580	2751	2751	2850	2958	3207
PF1596L	1308	1401	1533	1533	1629	1641	1761
PF1596R	1308	1401	1533	1533	1629	1641	1761
PF1896L	1401	1491	1629	1629	1725	1746	1878
PF1896R	1401	1491	1629	1629	1725	1746	1878
PF2196L	1491	1584	1725	1725	1821	1851	1998
PF2196R	1491	1584	1725	1725	1821	1851	1998
PF2496L	1584	1674	1821	1821	2013	2046	2115
PF2496R	1584	1674	1821	1821	2013	2046	2115
PF2496-4B	1845	1938	2091	2091	2187	2244	2430
PF2796-4B	2049	2142	2295	2295	2391	2454	2634
PF3096-4B	2142	2232	2391	2391	2487	2559	2754
PF3396-4B	2232	2325	2487	2487	2583	2664	2871
PF3696-4B	2325	2415	2583	2583	2676	2769	2988
PF3996-4B	2415	2508	2676	2676	2772	2874	3105
PF4296-4B	2508	2601	2772	2772	2871	2979	3228

A-Bristol, Prairie, Savannah15
B-Plateau, Ridgegate, Summerhill
C-Augusta15, Bedford, Charleston15, Easton, Fairway, Gateway, Harbor, Hastings15, Liberty, Seneca, Vicksburg

D-Regency
E-
F-
G-Aspen15, Centennial15, Madison15, Norfolk15, Orleans, Riverton

SEE PAGE 54 FOR DOORS AVAILABLE IN MOLDED & PRICING

CABINET TYPE — PANTRY

84", 90", 93", & 96" TALL WALK THRU PANTRY FRONT

SEE PAGE 27 FOR INFORMATION ON MULTI PANEL DOORS

N/A OVER 36" WIDE OR 96" TALL
NO BOTTOM RAIL

THE 84" TALL PANTY WILL HAVE ONE TALL OPENING. THE DOORS WILL HAVE A 3 1/2 " TOP, MIDDLE AND BOTTOM RAIL. THE 90", 93", & 96" TALL PANTRY DOOR WILL ALSO HAVE A 3 1/2 " TOP, MIDDLE AND BOTTOM RAIL ON LOWER SECTION. THE TOP SECTION WILL HAVE THE STANDARD STILE AND RAIL SIZE FOR THE DOOR STYLE CHOSEN.

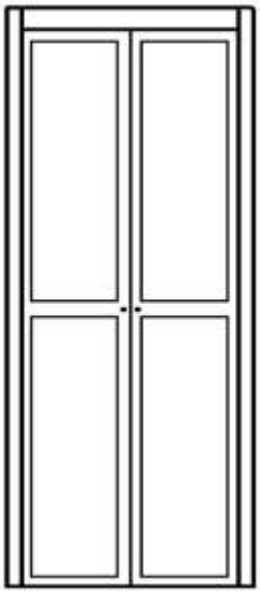

PWTF3084-2B



PWTF3090-4B

CABINET	LIST PRICE						
	A	B	C	D	E	F	G
PWTF3084-2B	1809	1899	2058	2058	2154	2214	2421
PWTF3384-2B	1899	1992	2154	2154	2250	2319	2538
PWTF3684-2B	1992	2112	2250	2250	2343	2424	2655
PWTF3090-4B	2319	2409	2568	2568	2664	2730	2931
PWTF3390-4B	2409	2502	2664	2664	2760	2835	3048
PWTF3690-4B	2502	2592	2760	2760	2853	2940	3165
PWTF3093-4B	2523	2613	2772	2772	2868	2940	3135
PWTF3393-4B	2613	2706	2868	2868	2964	3045	3252
PWTF3693-4B	2706	2796	2964	2964	3057	3150	3369
PWTF3096-4B	2544	2634	2793	2793	2889	2961	3156
PWTF3396-4B	2634	2727	2889	2889	2985	3066	3273
PWTF3696-4B	2727	2817	2985	2985	3078	3171	3390

A-Bristol, Prairie, Savannah15
B-Plateau, Ridgegate, Summerhill
C-Augusta15, Bedford, Charleston15, Easton, Fairway, Gateway, Harbor, Hastings15, Liberty, Seneca, Vicksburg

D-Regency
E-
F-
G-Aspen15, Centennial15, Madison15, Norfolk15, Orleans, Riverton

SEE PAGE 54 FOR DOORS AVAILABLE IN MOLDED & PRICING

CABINET TYPE — PANTRY

84", 90", 93" & 96" TALL PANTRY MICROWAVE WITH 4 DWRS

NO SHELF IN TOP OF 84" & 90 - ONE ADJ SHELF IN 93" AND 96"
16 1/4" MICROWAVE OPENING - CLASSIC INTERIOR IN MW OPENING
3 1/2" RAIL ABOVE MICROWAVE OPENING - CUT OUT 48" ABOVE FLOOR
MICROWAVE OPENING IS 3 1/2" SMALLER THAN OVERALL WIDTH
WE WILL FILL IN MAX 6" IN THE OPENING (3" ON EACH SIDE) IF NEEDED.
WE WILL NOT CUT OUT. MINIMUM 1/2" FILL IN ON EACH SIDE



PD2484MW-4-2B

TOE KICK WILL BE ATTATCHED. ON 96" YOU MUST USE CODE FOR LOOSE TOE IF YOU WANT IT SENT LOOSE.

24" DEEP CABINET	LIST PRICE						
	A	B	C	D	E	F	G
PD2484MW-4-2B	3960	3996	4332	4332	4374	4416	4821
PD2784MW-4-2B	4050	4086	4422	4422	4464	4506	4911
PD3084MW-4-2B	4152	4188	4530	4530	4569	4611	5040
PD2490MW-4-2B	4104	4155	4530	4530	4572	4614	5058
PD2790MW-4-2B	4212	4245	4620	4620	4662	4704	5148
PD3090MW-4-2B	4314	4347	4728	4728	4770	4812	5274
PD2493MW-4-2B	4293	4317	4731	4731	4776	4818	5295
PD2793MW-4-2B	4383	4407	4821	4821	4866	4908	5385
PD3093MW-4-2B	4485	4509	4926	4926	4974	5016	5508
PD2496MW-4-2B	4293	4317	4731	4731	4776	4818	5295
PD2796MW-4-2B	4383	4407	4821	4821	4866	4908	5385
PD3096MW-4-2B	4485	4509	4926	4926	4974	5016	5508
FINISHED MICROWAVE SECTION							
PD2484MW-4-2BFI	4854	4890	5226	5226	5268	5310	5715
PD2784MW-4-2BFI	4944	4980	5316	5316	5358	5400	5805
PD3084MW-4-2BFI	5046	5082	5424	5424	5463	5505	5934
PD2490MW-4-2BFI	4998	5049	5424	5424	5466	5508	5952
PD2790MW-4-2BFI	5106	5139	5514	5514	5556	5598	6042
PD3090MW-4-2BFI	5208	5241	5622	5622	5664	5706	6168
PD2493MW-4-2BFI	5187	5211	5625	5625	5670	5712	6189
PD2793MW-4-2BFI	5277	5301	5715	5715	5760	5802	6279
PD3093MW-4-2BFI	5379	5403	5820	5820	5868	5910	6402
PD2496MW-4-2BFI	5187	5211	5625	5625	5670	5712	6189
PD2796MW-4-2BFI	5277	5301	5715	5715	5760	5802	6279
PD3096MW-4-2BFI	5379	5403	5820	5820	5868	5910	6402
LOOSE TOE	0.01	0.01	0.01	0.01	0.01	0.01	0.01

84", 90", 93" AND 96" TALL PANTRY MICROWAVE OVEN

NO SHELF IN TOP OF 84" - ONE ADJ SHELF IN 90", 93", AND 96"
3 SHELVES IN BOTTOM
16 1/4" MICROWAVE OPENING - CLASSIC INTERIOR IN MW OPENING
3 1/2" RAIL ABOVE MICROWAVE OPENING - CUT OUT 48" ABOVE FLOOR
MICROWAVE OPENING IS 3 1/2" SMALLER THAN OVERALL WIDTH
WE WILL FILL IN MAX 6" IN THE OPENING (3" ON EACH SIDE) IF NEEDED.
WE WILL NOT CUT OUT. MINIMUM 1/2" FILL IN ON EACH SIDE

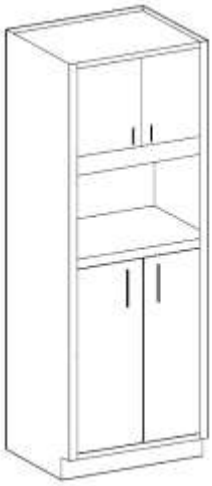

P2484MW-4B

TOE KICK WILL BE ATTATCHED. ON 96" YOU MUST USE CODE FOR LOOSE TOE IF YOU WANT IT SENT LOOSE.

24" DEEP CABINET	LIST PRICE						
	A	B	C	D	E	F	G
P2484MW-4B	2460	2496	2832	2832	2874	2916	3321
P2784MW-4B	2550	2586	2922	2922	2964	3006	3411
P3084MW-4B	2652	2688	3030	3030	3069	3111	3540
P2490MW-4B	2604	2655	3030	3030	3072	3114	3558
P2790MW-4B	2712	2745	3120	3120	3162	3204	3648
P3090MW-4B	2814	2847	3228	3228	3270	3312	3774
P2493MW-4B	2793	2817	3231	3231	3276	3318	3795
P2793MW-4B	2883	2907	3321	3321	3366	3408	3885
P3093MW-4B	2985	3009	3426	3426	3474	3516	4008
P2496MW-4B	2814	2838	3252	3252	3297	3339	3816
P2796MW-4B	2904	2928	3342	3342	3387	3429	3906
P3096MW-4B	3006	3030	3447	3447	3495	3537	4029
FINISHED MICROWAVE SECTION							
P2484MW-4BFI	3354	3390	3726	3726	3768	3810	4215
P2784MW-4BFI	3444	3480	3816	3816	3858	3900	4305
P3084MW-4BFI	3546	3582	3924	3924	3963	4005	4434
P2490MW-4BFI	3498	3549	3924	3924	3966	4008	4452
P2790MW-4BFI	3606	3639	4014	4014	4056	4098	4542
P3090MW-4BFI	3708	3741	4122	4122	4164	4206	4668
P2493MW-4BFI	3687	3711	4125	4125	4170	4212	4689
P2793MW-4BFI	3777	3801	4215	4215	4260	4302	4779
P3093MW-4BFI	3879	3903	4320	4320	4368	4410	4902
P2496MW-4BFI	3708	3732	4146	4146	4191	4233	4710
P2796MW-4BFI	3798	3822	4236	4236	4281	4323	4800
P3096MW-4BFI	3900	3924	4341	4341	4389	4431	4923
LOOSE TOE	0.01	0.01	0.01	0.01	0.01	0.01	0.01

A-Bristol, Prairie, Savannah15
B-Plateau, Ridgegate, Summerhill
C-Augusta15, Bedford, Charleston15, Easton, Fairway, Gateway, Harbor, Hastings15, Liberty, Seneca, Vicksburg
D-Regency
E-
F-
G-Aspen15, Centennial15, Madison15, Norfolk15, Orleans, Riverton

SEE PAGE 54 FOR DOORS AVAILABLE IN MOLDED & PRICING

CABINET TYPE

PANTRY

84", 90", 93", AND 96" TALL BUILT IN MICROWAVE & SINGLE OVEN

1 BOTTOM DRAWER
ENTIRE ORDER WILL NOT BE PROCESSED UNTIL OVEN OPENING IS SUBMITTED
NO SHELF IN TOP OF 84" - ONE ADJ SHELF IN 90", 93", AND 96"
NUMBER OF SHELVES MAY VARY ACCORDING TO OPENING NEEDED TO ACCOMMODATE OVEN.
TOP DOORS MATCH STYLE USED ON WALL CABINETS
WE WILL FILL IN MAX 6" IN THE OPENING (3" ON EACH SIDE) IF NEEDED.
WE WILL NOT CUT OUT. MINIMUM 1/2" FILL IN ON EACH SIDE
MAXIMUM CUT OUT 2" SMALLER THAN FRAME CAN BE DONE ON SITE
OVEN OPENING IS 3 1/2" SMALLER THAN OVERALL WIDTH

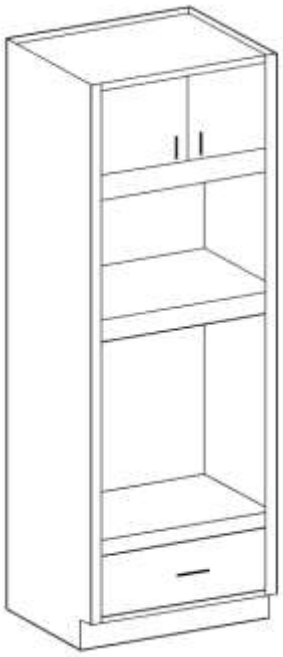

OCS3084U24MW-2B

TOE KICK WILL BE ATTATCHED. ON 96" YOU MUST USE CODE FOR LOOSE TOE IF YOU WANT IT SENT LOOSE.

24" DEEP CABINET	LIST PRICE						
	A	B	C	D	E	F	G
OCS2784U24MW-2B	2919	2952	3306	3306	3345	3465	3861
OCS3084U24MW-2B	3021	3054	3411	3411	3453	3573	3984
OCS3284U24MW-2B	3123	3156	3546	3546	3585	3717	4143
OCS3384U24MW-2B	3225	3258	3648	3648	3687	3819	4245
OCS2790U24MW-2B	3081	3111	3504	3504	3546	3669	4092
OCS3090U24MW-2B	3183	3213	3612	3612	3651	3780	4218
OCS3290U24MW-2B	3285	3315	3744	3744	3786	3921	4377
OCS3390U24MW-2B	3387	3417	3846	3846	3888	4023	4479
OCS2793U24MW-2B	3249	3276	3666	3666	3708	3837	4203
OCS3093U24MW-2B	3351	3378	3768	3768	3810	3942	4305
OCS3293U24MW-2B	3453	3480	3870	3870	3912	4047	4407
OCS3393U24MW-2B	3555	3582	3972	3972	4014	4149	4509
OCS2796U24MW-2B	3270	3297	3687	3687	3729	3858	4224
OCS3096U24MW-2B	3372	3399	3789	3789	3831	3963	4326
OCS3296U24MW-2B	3474	3501	3891	3891	3933	4068	4428
OCS3396U24MW-2B	3576	3603	3993	3993	4035	4170	4530
LOOSE TOE	0.01	0.01	0.01	0.01	0.01	0.01	0.01

A-Bristol, Prairie, Savannah15
B-Plateau, Ridgegate, Summerhill
C-Augusta15, Bedford, Charleston15, Easton, Fairway, Gateway, Harbor, Hastings15, Liberty, Seneca, Vicksburg
D-Regency
E-
F-
G-Aspen15, Centennial15, Madison15, Norfolk15, Orleans, Riverton

SEE PAGE 54 FOR DOORS AVAILABLE IN MOLDED & PRICING

CABINET TYPE

PANTRY

84", 90", 93", & 96" TALL SINGLE OVEN CABINET

ENTIRE ORDER WILL NOT BE PROCESSED UNTIL OVEN OPENING IS SUBMITTED

*NO SHELF IN TOP OF 84" - ONE ADJ FULL DEPTH SHELF IN 90", 93" AND 96"

TOP DOORS MATCH STYLE USED ON WALL CABINETS

WE WILL FILL IN MAX 6" IN THE OPENING (3" ON EACH SIDE) IF NEEDED.

WE WILL NOT CUT OUT. MINIMUM 1/2" FILL IN ON EACH SIDE

MAXIMUM CUT OUT 2" SMALLER THAN FRAME CAN BE DONE ON SITE

OVEN OPENING IS 3 1/2" SMALLER THAN OVERALL WIDTH

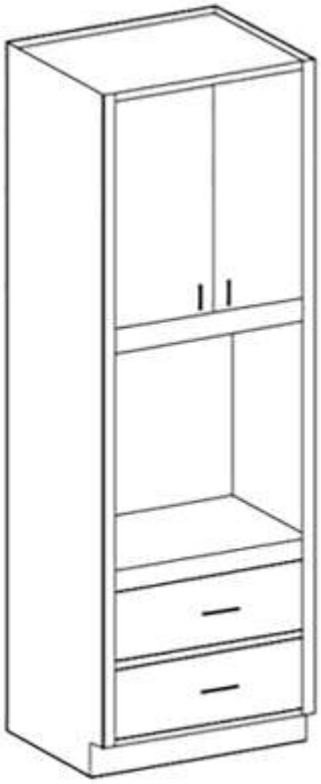

OCS2784U24-2B

* NUMBER OF SHELVES MAY VARY ACCORDING TO OPENING NEEDED TO ACCOMMODATE OVEN.

24" DEEP CABINET	LIST PRICE						
	A	B	C	D	E	F	G
OCS2784U24-2B	2724	2760	3096	3096	3138	3234	3585
OCS3084U24-2B	2826	2862	3204	3204	3243	3345	3714
OCS3284U24-2B	2928	2964	3336	3336	3378	3486	3873
OCS3384U24-2B	3030	3066	3438	3438	3480	3588	3975
OCS2790U24-2B	2886	2919	3294	3294	3336	3444	3822
OCS3090U24-2B	2988	3021	3402	3402	3444	3555	3948
OCS3290U24-2B	3090	3123	3534	3534	3576	3696	4101
OCS3390U24-2B	3192	3225	3636	3636	3678	3798	4203
OCS2793U24-2B	3057	3081	3495	3495	3540	3654	4059
OCS3093U24-2B	3159	3183	3600	3600	3648	3771	4182
OCS3293U24-2B	3261	3285	3735	3735	3780	3906	4341
OCS3393U24-2B	3363	3387	3837	3837	3882	4008	4443
OCS2796U24-2B	3078	3102	3516	3516	3561	3675	4080
OCS3096U24-2B	3180	3204	3621	3621	3669	3792	4203
OCS3296U24-2B	3282	3306	3756	3756	3801	3927	4362
OCS3396U24-2B	3384	3408	3858	3858	3903	4029	4464
LOOSE TOE	0.01	0.01	0.01	0.01	0.01	0.01	0.01

A-Bristol, Prairie, Savannah15
B-Plateau, Ridgegate, Summerhill
C-Augusta15, Bedford, Charleston15, Easton, Fairway, Gateway, Harbor, Hastings15, Liberty, Seneca, Vicksburg
D-Regency
E-
F-
G-Aspen15, Centennial15, Madison15, Norfolk15, Orleans, Riverton

SEE PAGE 54 FOR DOORS AVAILABLE IN MOLDED & PRICING

CABINET TYPE

PANTRY

84", 90", 93", AND 96" TALL DOUBLE OVEN CABINET

ENTIRE ORDER WILL NOT BE PROCESSED UNTIL OVEN OPENING IS SUBMITTED
NO SHELF IN TOP OF 84" - ONE ADJ SHELF IN 90", 93", AND 96"
*NUMBER OF SHELVES MAY VARY ACCORDING TO OPENING NEEDED TO ACCOMMODATE OVEN.
TOP DOORS MATCH STYLE USED ON WALL CABINETS
WE WILL FILL IN MAX 6" IN THE OPENING (3" ON EACH SIDE) IF NEEDED.
WE WILL NOT CUT OUT. MINIMUM 1/2" FILL IN ON EACH SIDE
MAXIMUM CUT OUT 2" SMALLER THAN FRAME CAN BE DONE ON SITE
OVEN OPENING IS 3 1/2" SMALLER THAN OVERALL WIDTH

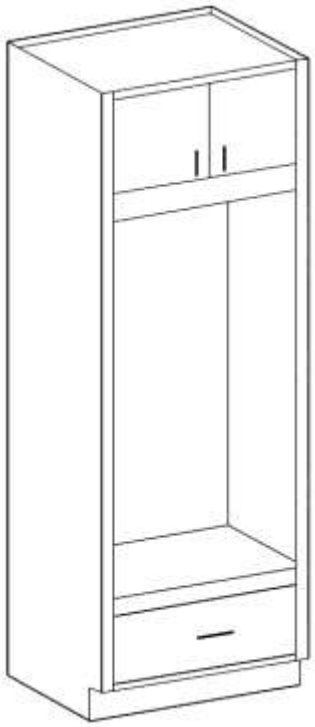

OCD3090U24-2B

TOE KICK WILL BE ATTATCHED. ON 96" YOU MUST USE CODE FOR LOOSE TOE IF YOU WANT IT SENT LOOSE.

24" DEEP CABINET	LIST PRICE						
	A	B	C	D	E	F	G
OCD2784U24-2B	2433	2484	2745	2745	2790	2877	3198
OCD3084U24-2B	2535	2586	2850	2850	2892	2985	3327
OCD3284U24-2B	2637	2688	2985	2985	3030	3129	3480
OCD3384U24-2B	2739	2790	3087	3087	3132	3231	3582
OCD2790U24-2B	2595	2637	2934	2934	2973	3069	3417
OCD3090U24-2B	2697	2739	3039	3039	3081	3180	3546
OCD3290U24-2B	2799	2841	3174	3174	3213	3321	3702
OCD3390U24-2B	2901	2943	3276	3276	3315	3423	3804
OCD2793U24-2B	2766	2790	3117	3117	3162	3264	3636
OCD3093U24-2B	2868	2892	3225	3225	3270	3381	3765
OCD3293U24-2B	2970	2994	3357	3357	3402	3516	3921
OCD3393U24-2B	3072	3096	3459	3459	3504	3618	4023
OCD2796U24-2B	2787	2811	3138	3138	3183	3285	3657
OCD3096U24-2B	2889	2913	3246	3246	3291	3402	3786
OCD3296U24-2B	2991	3015	3378	3378	3423	3537	3942
OCD3396U24-2B	3093	3117	3480	3480	3525	3639	4044
LOOSE TOE	0.01	0.01	0.01	0.01	0.01	0.01	0.01

NOTES OR ADDITIONS

OFFICE DIMENSIONS

Bookcase

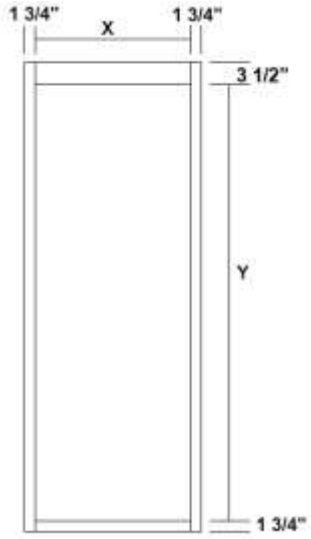

Opening Width Calculation
Cabinet Width - 3.5" = X
Cabinet Height - 5.25" = Y

Bookcase W/No Bottom Rail

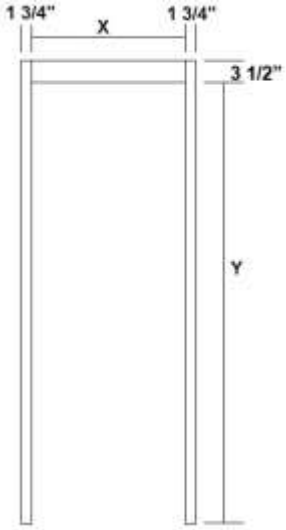

Opening Width Calculation
Cabinet Width - 3.5" = X
Cabinet Height - 3.5" = Y

Bookcase With Flush Toe Kick

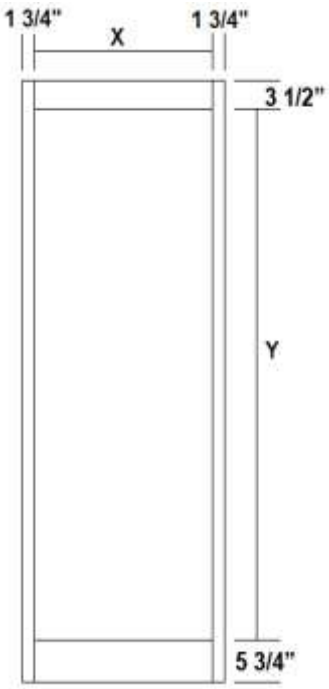

Opening Width Calculation
Cabinet Width - 3.5" = X
Cabinet Height - 9.25" = Y

Bookcase W/Doors - Flush Toe

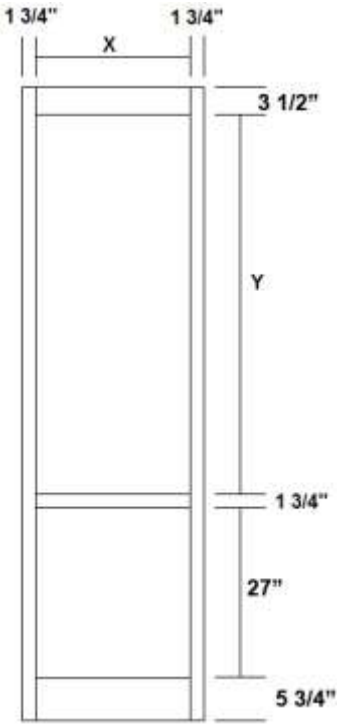

Opening Width Calculation
Cabinet Width - 3.5" = X
Cabinet Height - 38" = Y

OFFICE DIMENSIONS

Office Base W/Drawer - Recessed Toe

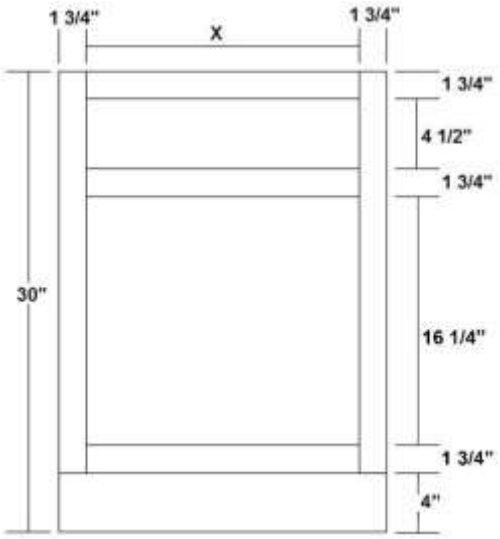

Opening Width Calculation
Cabinet Width - 3.5" = X

Office Base W/Drawer - Flush Toe

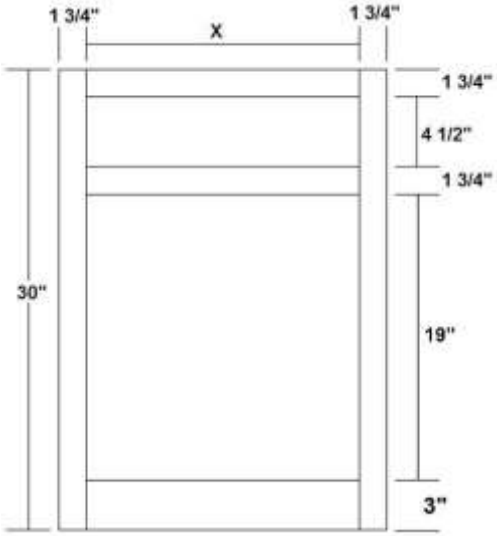

Opening Width Calculation
Cabinet Width - 3.5" = X

Three Drawer Base With Recessed Toe

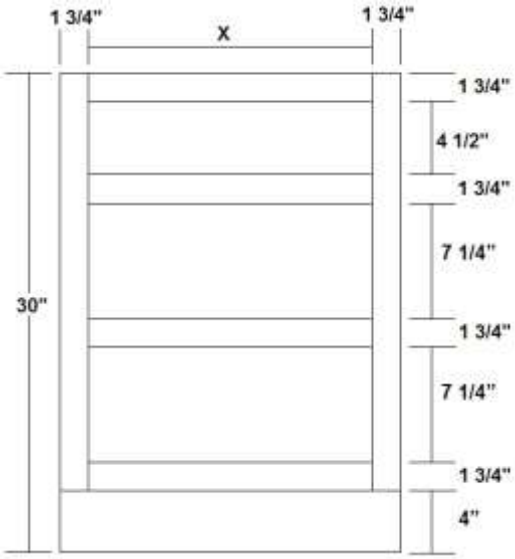

Opening Width Calculation
Cabinet Width - 3.5" = X

Three Drawer Base With Flush Toe

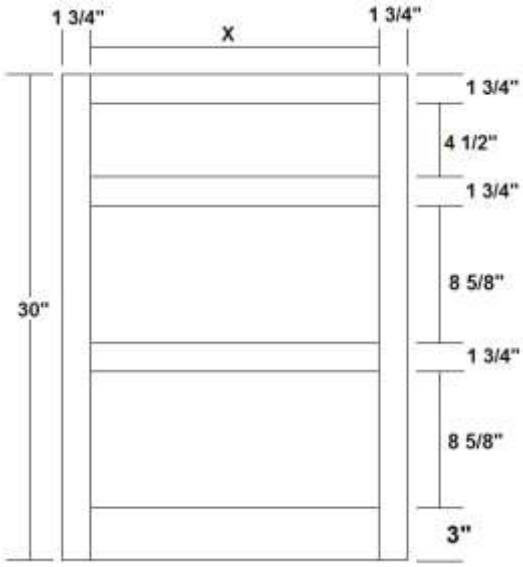

Opening Width Calculation
Cabinet Width - 3.5" = X

RECESSED TOE KICK SETS BACK 3"

OFFICE DIMENSIONS

File Base W/Two STD DWRS & 1 File DWR - Flush Toe

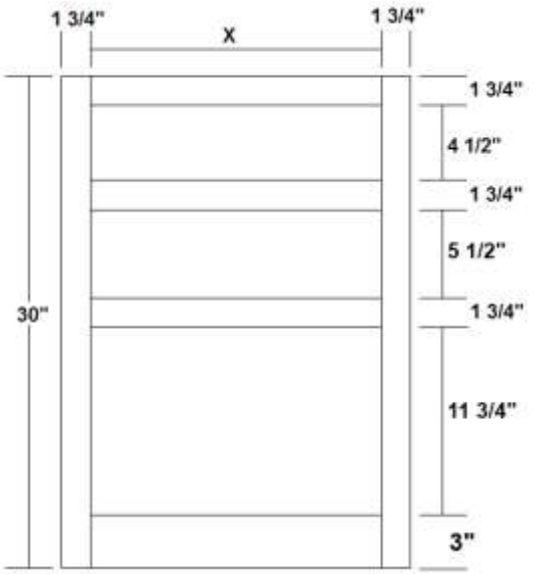

Opening Width Calculation
Cabinet Width - 3.5" = X

Locker Cabinet

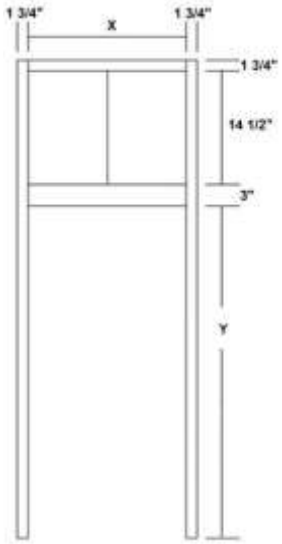

Opening Width Calculation
Cabinet Width - 3.5" = X
Cabinet Height - 19.25" = Y

File Base W/1 STD DWR & 1 File DWR - Recessed Toe

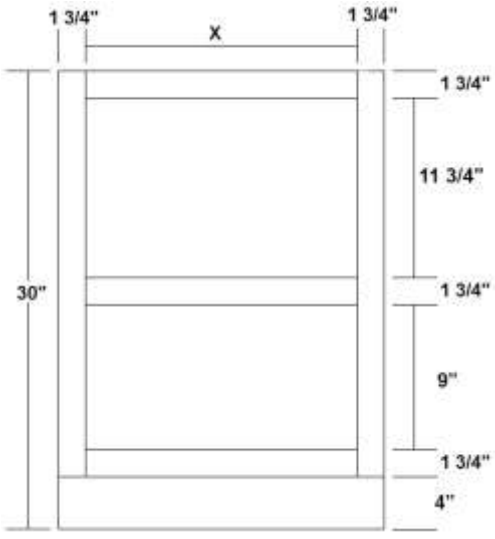

Opening Width Calculation
Cabinet Width - 3.5" = X

File Base With 2 File DWRS - Flush Toe

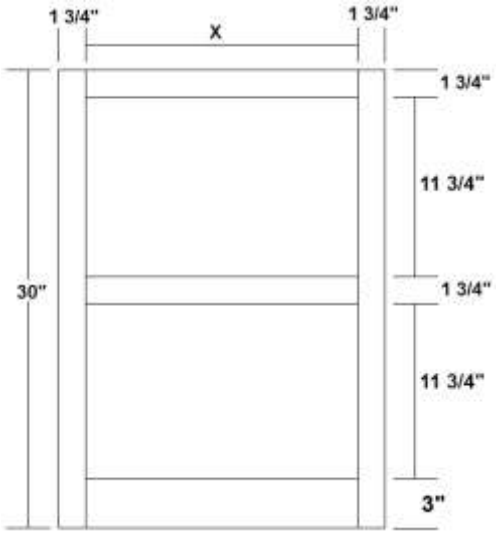

Opening Width Calculation
Cabinet Width - 3.5" = X

RECESSED TOE KICK SETS BACK 3"

OFFICE DIMENSIONS

Office Base Easy Reach With Flush Toe

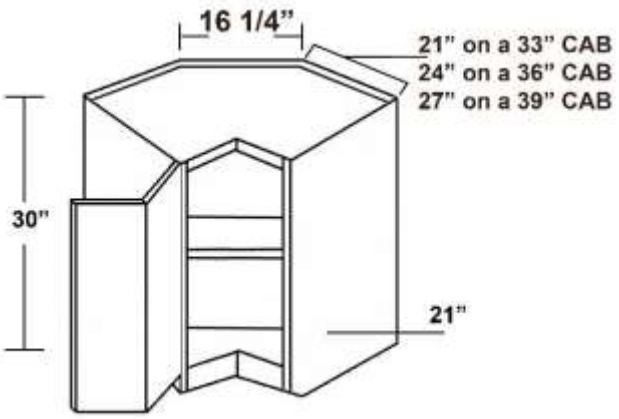

Office Base Easy Reach With Recessed Toe

3/4 DEPTH SHELF IN OFBER33. FULL DEPTH SHELF (WITH NOTCH) ON OFBER36 & 39

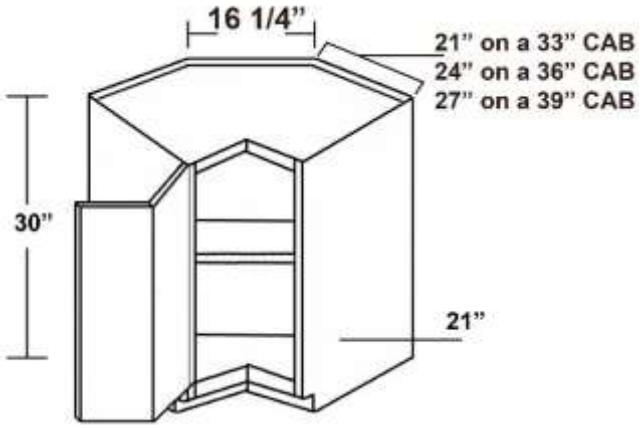

Office Base With Full Height Door - Flush Toe

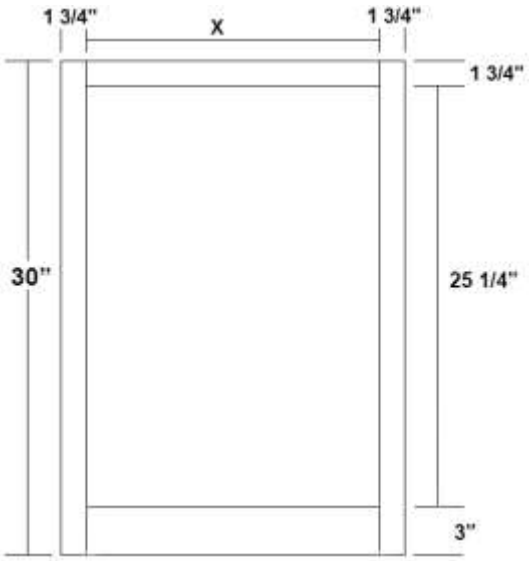

Opening Width Calculation
Cabinet Width - 3.5" = X

Office Base With Full Height Door - Recessed Toe

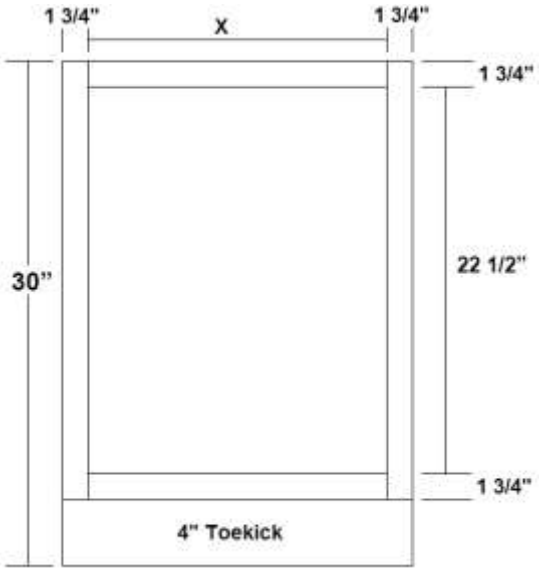

Opening Width Calculation
Cabinet Width - 3.5" = X

RECESSED TOE KICK SETS BACK 3"

A-Bristol, Prairie, Savannah15
B-Plateau, Ridgegate, Summerhill
C-Augusta15, Bedford, Charleston15, Easton, Fairway, Gateway, Harbor, Hastings15, Liberty, Seneca, Vicksburg
D-Regency
E-
F-
G-Aspen15, Centennial15, Madison15, Norfolk15, Orleans, Riverton

SEE PAGE 54 FOR DOORS AVAILABLE IN MOLDED & PRICING

CABINET TYPE — OFFICE

34 1/2" TALL BASE BOOKCASE

FINISHED INTERIOR
DOES NOT COME WITH FINISHED ENDS
2 ADJUSTABLE SHELVES
STANDARD 5 3/4" FLUSH TOE KICK
SEE PAGE **356** FOR 3" FLUSH TOE MODIFICATION

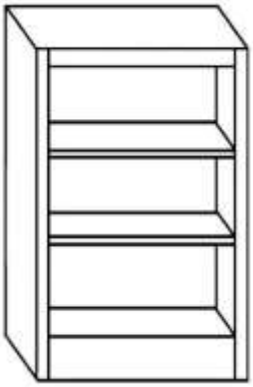

BBK12-FTK

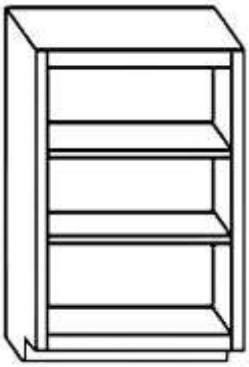

BBK12-RTK

12" DEEP CABINET	LIST PRICE A	B	C	D	E	F	G
5 3/4 FLUSH TOE							
BBK12-FTK	708	708	708	708	708	708	708
BBK15-FTK	903	903	903	903	903	903	903
BBK18-FTK	1095	1095	1095	1095	1095	1095	1095
BBK21-FTK	1287	1287	1287	1287	1287	1287	1287
BBK24-FTK	1479	1479	1479	1479	1479	1479	1479
BBK27-FTK	1674	1674	1674	1674	1674	1674	1674
BBK30-FTK	1866	1866	1866	1866	1866	1866	1866
BBK33-FTK	2034	2034	2034	2034	2034	2034	2034
BBK36-FTK	2250	2250	2250	2250	2250	2250	2250
BBK39-FTK	2445	2445	2445	2445	2445	2445	2445
BBK42-FTK	2637	2637	2637	2637	2637	2637	2637
BBK45-FTK	2829	2829	2829	2829	2829	2829	2829
BBK48-FTK	3021	3021	3021	3021	3021	3021	3021
RECESSED TOE							
BBK12-RTK	708	708	708	708	708	708	708
BBK15-RTK	903	903	903	903	903	903	903
BBK18-RTK	1095	1095	1095	1095	1095	1095	1095
BBK21-RTK	1287	1287	1287	1287	1287	1287	1287
BBK24-RTK	1479	1479	1479	1479	1479	1479	1479
BBK27-RTK	1674	1674	1674	1674	1674	1674	1674
BBK30-RTK	1866	1866	1866	1866	1866	1866	1866
BBK33-RTK	2034	2034	2034	2034	2034	2034	2034
BBK36-RTK	2250	2250	2250	2250	2250	2250	2250
BBK39-RTK	2445	2445	2445	2445	2445	2445	2445
BBK42-RTK	2637	2637	2637	2637	2637	2637	2637
BBK45-RTK	2829	2829	2829	2829	2829	2829	2829
BBK48-RTK	3021	3021	3021	3021	3021	3021	3021

30" TALL WALL BOOKCASE

3 1/2" TOP RAIL
30" HAS 2 ADJUSTABLE SHELVES
FINISHED INTERIOR STANDARD
DOES NOT COME WITH FINISHED ENDS

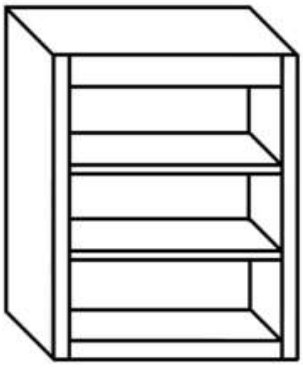

BK1230

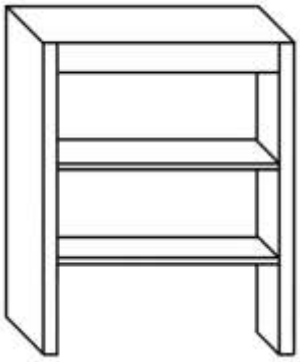

BK1230-NBR

BOOKCASES N/A OVER 48" WIDE

12" DEEP CABINET	LIST PRICE A	B	C	D	E	F	G
BK1230	690	690	690	690	690	690	690
BK1530	885	885	885	885	885	885	885
BK1830	1077	1077	1077	1077	1077	1077	1077
BK2130	1269	1269	1269	1269	1269	1269	1269
BK2430	1461	1461	1461	1461	1461	1461	1461
BK2730	1656	1656	1656	1656	1656	1656	1656
BK3030	1848	1848	1848	1848	1848	1848	1848
BK3330	2016	2016	2016	2016	2016	2016	2016
BK3630	2232	2232	2232	2232	2232	2232	2232
BK3930	2427	2427	2427	2427	2427	2427	2427
BK4230	2619	2619	2619	2619	2619	2619	2619
BK4530	2811	2811	2811	2811	2811	2811	2811
BK4830	3003	3003	3003	3003	3003	3003	3003
NO BOTTOM RAIL							
BK1230-NBR	690	690	690	690	690	690	690
BK1530-NBR	885	885	885	885	885	885	885
BK1830-NBR	1077	1077	1077	1077	1077	1077	1077
BK2130-NBR	1269	1269	1269	1269	1269	1269	1269
BK2430-NBR	1461	1461	1461	1461	1461	1461	1461
BK2730-NBR	1656	1656	1656	1656	1656	1656	1656
BK3030-NBR	1848	1848	1848	1848	1848	1848	1848
BK3330-NBR	2016	2016	2016	2016	2016	2016	2016
BK3630-NBR	2232	2232	2232	2232	2232	2232	2232
BK3930-NBR	2427	2427	2427	2427	2427	2427	2427
BK4230-NBR	2619	2619	2619	2619	2619	2619	2619
BK4530-NBR	2811	2811	2811	2811	2811	2811	2811
BK4830-NBR	3003	3003	3003	3003	3003	3003	3003

A-Bristol, Prairie, Savannah15
B-Plateau, Ridgegate, Summerhill
C-Augusta15, Bedford, Charleston15, Easton, Fairway, Gateway, Harbor, Hastings15, Liberty, Seneca, Vicksburg
D-Regency
E-
F-
G-Aspen15, Centennial15, Madison15, Norfolk15, Orleans, Riverton

SEE PAGE 54 FOR DOORS AVAILABLE IN MOLDED & PRICING

CABINET TYPE — OFFICE

36" & 39" TALL WALL BOOKCASE

3 1/2" TOP RAIL
36" HAS 2 ADJUSTABLE SHELVES
39" HAS 3 ADJUSTABLE SHELVES
FINISHED INTERIOR STANDARD
DOES NOT COME WITH FINISHED ENDS

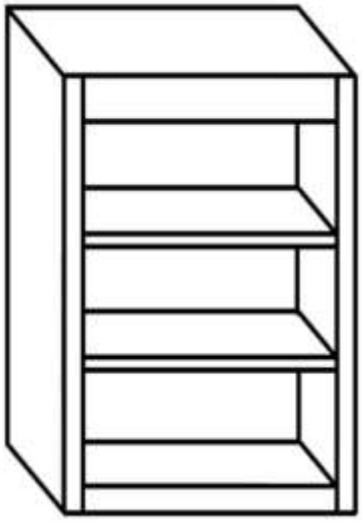

BK1536

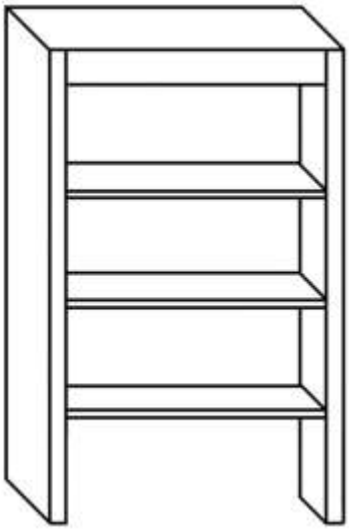

BK1539-NBR

N/A OVER 48" WIDE

12" DEEP CABINET	LIST PRICE						
	A	B	C	D	E	F	G
BK1236	723	723	723	723	723	723	723
BK1536	918	918	918	918	918	918	918
BK1836	1110	1110	1110	1110	1110	1110	1110
BK2136	1302	1302	1302	1302	1302	1302	1302
BK2436	1494	1494	1494	1494	1494	1494	1494
BK2736	1689	1689	1689	1689	1689	1689	1689
BK3036	1881	1881	1881	1881	1881	1881	1881
BK3336	2049	2049	2049	2049	2049	2049	2049
BK3636	2265	2265	2265	2265	2265	2265	2265
BK3936	2460	2460	2460	2460	2460	2460	2460
BK4236	2652	2652	2652	2652	2652	2652	2652
BK4536	2844	2844	2844	2844	2844	2844	2844
BK4836	3036	3036	3036	3036	3036	3036	3036
NO BOTTOM RAIL							
BK1236-NBR	723	723	723	723	723	723	723
BK1536-NBR	918	918	918	918	918	918	918
BK1836-NBR	1110	1110	1110	1110	1110	1110	1110
BK2136-NBR	1302	1302	1302	1302	1302	1302	1302
BK2436-NBR	1494	1494	1494	1494	1494	1494	1494
BK2736-NBR	1689	1689	1689	1689	1689	1689	1689
BK3036-NBR	1881	1881	1881	1881	1881	1881	1881
BK3336-NBR	2049	2049	2049	2049	2049	2049	2049
BK3636-NBR	2265	2265	2265	2265	2265	2265	2265
BK3936-NBR	2460	2460	2460	2460	2460	2460	2460
BK4236-NBR	2652	2652	2652	2652	2652	2652	2652
BK4536-NBR	2844	2844	2844	2844	2844	2844	2844
BK4836-NBR	3036	3036	3036	3036	3036	3036	3036
BK1239	798	798	798	798	798	798	798
BK1539	993	993	993	993	993	993	993
BK1839	1185	1185	1185	1185	1185	1185	1185
BK2139	1377	1377	1377	1377	1377	1377	1377
BK2439	1569	1569	1569	1569	1569	1569	1569
BK2739	1764	1764	1764	1764	1764	1764	1764
BK3039	1956	1956	1956	1956	1956	1956	1956
BK3339	2124	2124	2124	2124	2124	2124	2124
BK3639	2340	2340	2340	2340	2340	2340	2340
BK3939	2535	2535	2535	2535	2535	2535	2535
BK4239	2727	2727	2727	2727	2727	2727	2727
BK4539	2919	2919	2919	2919	2919	2919	2919
BK4839	3111	3111	3111	3111	3111	3111	3111
NO BOTTOM RAIL							
BK1239-NBR	798	798	798	798	798	798	798
BK1539-NBR	993	993	993	993	993	993	993
BK1839-NBR	1185	1185	1185	1185	1185	1185	1185
BK2139-NBR	1377	1377	1377	1377	1377	1377	1377
BK2439-NBR	1569	1569	1569	1569	1569	1569	1569
BK2739-NBR	1764	1764	1764	1764	1764	1764	1764
BK3039-NBR	1956	1956	1956	1956	1956	1956	1956
BK3339-NBR	2124	2124	2124	2124	2124	2124	2124
BK3639-NBR	2340	2340	2340	2340	2340	2340	2340
BK3939-NBR	2535	2535	2535	2535	2535	2535	2535
BK4239-NBR	2727	2727	2727	2727	2727	2727	2727
BK4539-NBR	2919	2919	2919	2919	2919	2919	2919
BK4839-NBR	3111	3111	3111	3111	3111	3111	3111

A-Bristol, Prairie, Savannah15
B-Plateau, Ridgegate, Summerhill
C-Augusta15, Bedford, Charleston15, Easton, Fairway, Gateway, Harbor, Hastings15, Liberty, Seneca, Vicksburg
D-Regency
E-
F-
G-Aspen15, Centennial15, Madison15, Norfolk15, Orleans, Riverton

SEE PAGE 54 FOR DOORS AVAILABLE IN MOLDED & PRICING

CABINET TYPE — OFFICE

42" & 48" TALL WALL BOOKCASE

3 1/2" TOP RAIL
42" & 48" HAVE 3 ADJUSTABLE SHELVES
FINISHED INTERIOR STANDARD
DOES NOT COME WITH FINISHED ENDS

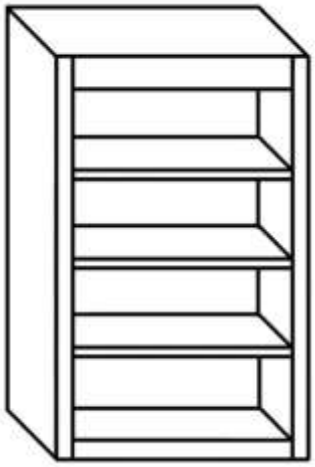

BK1542

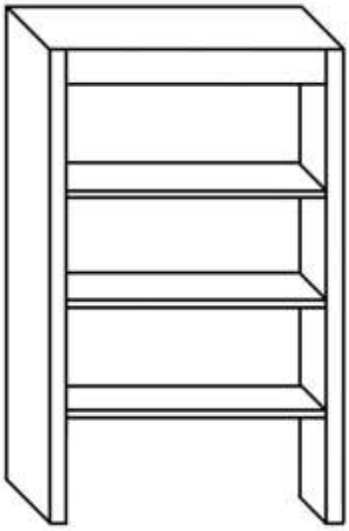

BK1548-NBR

N/A OVER 48" WIDE

12" DEEP CABINET	LIST PRICE						
	A	B	C	D	E	F	G
BK1242	840	840	840	840	840	840	840
BK1542	1032	1032	1032	1032	1032	1032	1032
BK1842	1224	1224	1224	1224	1224	1224	1224
BK2142	1419	1419	1419	1419	1419	1419	1419
BK2442	1611	1611	1611	1611	1611	1611	1611
BK2742	1803	1803	1803	1803	1803	1803	1803
BK3042	1995	1995	1995	1995	1995	1995	1995
BK3342	2190	2190	2190	2190	2190	2190	2190
BK3642	2382	2382	2382	2382	2382	2382	2382
BK3942	2574	2574	2574	2574	2574	2574	2574
BK4242	2766	2766	2766	2766	2766	2766	2766
BK4542	2961	2961	2961	2961	2961	2961	2961
BK4842	3153	3153	3153	3153	3153	3153	3153
NO BOTTOM RAIL							
BK1242-NBR	840	840	840	840	840	840	840
BK1542-NBR	1032	1032	1032	1032	1032	1032	1032
BK1842-NBR	1224	1224	1224	1224	1224	1224	1224
BK2142-NBR	1419	1419	1419	1419	1419	1419	1419
BK2442-NBR	1611	1611	1611	1611	1611	1611	1611
BK2742-NBR	1803	1803	1803	1803	1803	1803	1803
BK3042-NBR	1995	1995	1995	1995	1995	1995	1995
BK3342-NBR	2190	2190	2190	2190	2190	2190	2190
BK3642-NBR	2382	2382	2382	2382	2382	2382	2382
BK3942-NBR	2574	2574	2574	2574	2574	2574	2574
BK4242-NBR	2766	2766	2766	2766	2766	2766	2766
BK4542-NBR	2961	2961	2961	2961	2961	2961	2961
BK4842-NBR	3153	3153	3153	3153	3153	3153	3153
BK1248	882	882	882	882	882	882	882
BK1548	1074	1074	1074	1074	1074	1074	1074
BK1848	1269	1269	1269	1269	1269	1269	1269
BK2148	1461	1461	1461	1461	1461	1461	1461
BK2448	1653	1653	1653	1653	1653	1653	1653
BK2748	1845	1845	1845	1845	1845	1845	1845
BK3048	2040	2040	2040	2040	2040	2040	2040
BK3348	2232	2232	2232	2232	2232	2232	2232
BK3648	2424	2424	2424	2424	2424	2424	2424
BK3948	2616	2616	2616	2616	2616	2616	2616
BK4248	2811	2811	2811	2811	2811	2811	2811
BK4548	3003	3003	3003	3003	3003	3003	3003
BK4848	3195	3195	3195	3195	3195	3195	3195
NO BOTTOM RAIL							
BK1248-NBR	882	882	882	882	882	882	882
BK1548-NBR	1074	1074	1074	1074	1074	1074	1074
BK1848-NBR	1269	1269	1269	1269	1269	1269	1269
BK2148-NBR	1461	1461	1461	1461	1461	1461	1461
BK2448-NBR	1653	1653	1653	1653	1653	1653	1653
BK2748-NBR	1845	1845	1845	1845	1845	1845	1845
BK3048-NBR	2040	2040	2040	2040	2040	2040	2040
BK3348-NBR	2232	2232	2232	2232	2232	2232	2232
BK3648-NBR	2424	2424	2424	2424	2424	2424	2424
BK3948-NBR	2616	2616	2616	2616	2616	2616	2616
BK4248-NBR	2811	2811	2811	2811	2811	2811	2811
BK4548-NBR	3003	3003	3003	3003	3003	3003	3003
BK4848-NBR	3195	3195	3195	3195	3195	3195	3195

A-Bristol, Prairie, Savannah15
B-Plateau, Ridgegate, Summerhill
C-Augusta15, Bedford, Charleston15, Easton, Fairway, Gateway, Harbor, Hastings15, Liberty, Seneca, Vicksburg
D-Regency
E-
F-
G-Aspen15, Centennial15, Madison15, Norfolk15, Orleans, Riverton

SEE PAGE 54 FOR DOORS AVAILABLE IN MOLDED & PRICING

CABINET TYPE — OFFICE

54" & 60" TALL WALL BOOKCASE

3 1/2" TOP RAIL
54" & 60" HAVE 4 ADJUSTABLE SHELVES
FINISHED INTERIOR STANDARD
DOES NOT COME WITH FINISHED ENDS

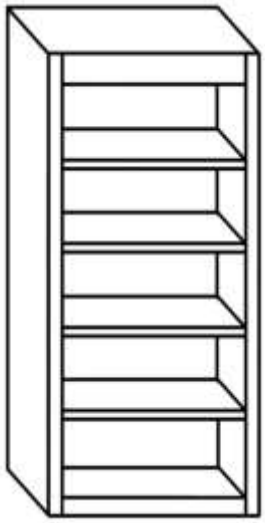

BK1554

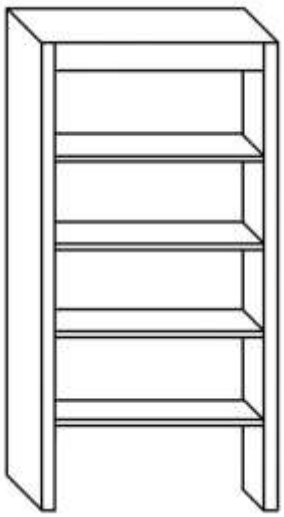

BK1260-NBR

N/A OVER 48" WIDE

12" DEEP CABINET	LIST PRICE						
	A	B	C	D	E	F	G
BK1254	966	966	966	966	966	966	966
BK1554	1185	1185	1185	1185	1185	1185	1185
BK1854	1407	1407	1407	1407	1407	1407	1407
BK2154	1626	1626	1626	1626	1626	1626	1626
BK2454	1842	1842	1842	1842	1842	1842	1842
BK2754	2061	2061	2061	2061	2061	2061	2061
BK3054	2286	2286	2286	2286	2286	2286	2286
BK3354	2502	2502	2502	2502	2502	2502	2502
BK3654	2721	2721	2721	2721	2721	2721	2721
BK3954	2940	2940	2940	2940	2940	2940	2940
BK4254	3162	3162	3162	3162	3162	3162	3162
BK4554	3387	3387	3387	3387	3387	3387	3387
BK4854	3609	3609	3609	3609	3609	3609	3609
NO BOTTOM RAIL							
BK1254-NBR	966	966	966	966	966	966	966
BK1554-NBR	1185	1185	1185	1185	1185	1185	1185
BK1854-NBR	1407	1407	1407	1407	1407	1407	1407
BK2154-NBR	1626	1626	1626	1626	1626	1626	1626
BK2454-NBR	1842	1842	1842	1842	1842	1842	1842
BK2754-NBR	2061	2061	2061	2061	2061	2061	2061
BK3054-NBR	2286	2286	2286	2286	2286	2286	2286
BK3354-NBR	2502	2502	2502	2502	2502	2502	2502
BK3654-NBR	2721	2721	2721	2721	2721	2721	2721
BK3954-NBR	2940	2940	2940	2940	2940	2940	2940
BK4254-NBR	3162	3162	3162	3162	3162	3162	3162
BK4554-NBR	3387	3387	3387	3387	3387	3387	3387
BK4854-NBR	3609	3609	3609	3609	3609	3609	3609
BK1260	1008	1008	1008	1008	1008	1008	1008
BK1560	1227	1227	1227	1227	1227	1227	1227
BK1860	1449	1449	1449	1449	1449	1449	1449
BK2160	1668	1668	1668	1668	1668	1668	1668
BK2460	1887	1887	1887	1887	1887	1887	1887
BK2760	2106	2106	2106	2106	2106	2106	2106
BK3060	2328	2328	2328	2328	2328	2328	2328
BK3360	2547	2547	2547	2547	2547	2547	2547
BK3660	2766	2766	2766	2766	2766	2766	2766
BK3960	2982	2982	2982	2982	2982	2982	2982
BK4260	3207	3207	3207	3207	3207	3207	3207
BK4560	3429	3429	3429	3429	3429	3429	3429
BK4860	3654	3654	3654	3654	3654	3654	3654
NO BOTTOM RAIL							
BK1260-NBR	1008	1008	1008	1008	1008	1008	1008
BK1560-NBR	1227	1227	1227	1227	1227	1227	1227
BK1860-NBR	1449	1449	1449	1449	1449	1449	1449
BK2160-NBR	1668	1668	1668	1668	1668	1668	1668
BK2460-NBR	1887	1887	1887	1887	1887	1887	1887
BK2760-NBR	2106	2106	2106	2106	2106	2106	2106
BK3060-NBR	2328	2328	2328	2328	2328	2328	2328
BK3360-NBR	2547	2547	2547	2547	2547	2547	2547
BK3660-NBR	2766	2766	2766	2766	2766	2766	2766
BK3960-NBR	2982	2982	2982	2982	2982	2982	2982
BK4260-NBR	3207	3207	3207	3207	3207	3207	3207
BK4560-NBR	3429	3429	3429	3429	3429	3429	3429
BK4860-NBR	3654	3654	3654	3654	3654	3654	3654

A-Bristol, Prairie, Savannah15
B-Plateau, Ridgegate, Summerhill
C-Augusta15, Bedford, Charleston15, Easton, Fairway, Gateway, Harbor, Hastings15, Liberty, Seneca, Vicksburg
D-Regency
E-
F-
G-Aspen15, Centennial15, Madison15, Norfolk15, Orleans, Riverton

SEE PAGE 54 FOR DOORS AVAILABLE IN MOLDED & PRICING

CABINET TYPE — OFFICE

72", 84", 90", & 93" TALL BOOKCASE

3 1/2" TOP RAIL
72", 84", 90", & 93" HAVE 5 ADJUSTABLE SHELVES
FINISHED INTERIOR STANDARD
DOES NOT COME WITH FINISHED ENDS
STANDARD 5 3/4" FLUSH TOE KICK

SEE PAGE **356** FOR 3" FLUSH TOE & RECESSED TOE MODIFICATION

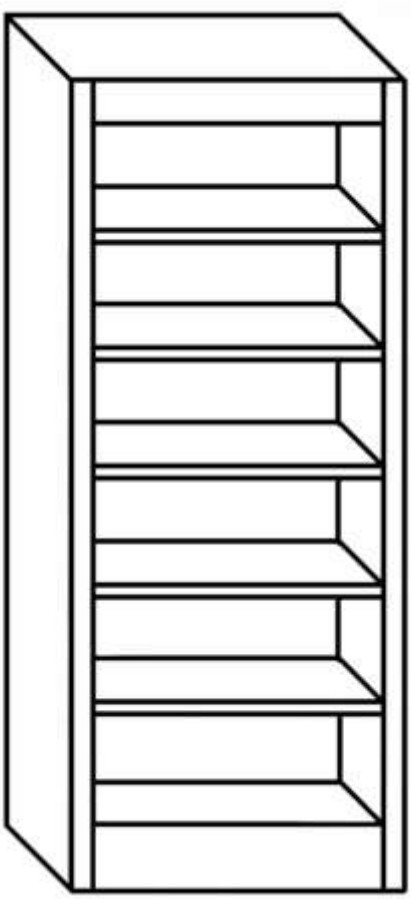

BK3393-FTK

N/A OVER 48" WIDE

12" DEEP CABINET	LIST PRICE						
	A	B	C	D	E	F	G
BK1272-FTK	1098	1098	1098	1098	1098	1098	1098
BK1572-FTK	1347	1347	1347	1347	1347	1347	1347
BK1872-FTK	1593	1593	1593	1593	1593	1593	1593
BK2172-FTK	1839	1839	1839	1839	1839	1839	1839
BK2472-FTK	2085	2085	2085	2085	2085	2085	2085
BK2772-FTK	2334	2334	2334	2334	2334	2334	2334
BK3072-FTK	2577	2577	2577	2577	2577	2577	2577
BK3372-FTK	2826	2826	2826	2826	2826	2826	2826
BK3672-FTK	3069	3069	3069	3069	3069	3069	3069
BK3972-FTK	3315	3315	3315	3315	3315	3315	3315
BK4272-FTK	3564	3564	3564	3564	3564	3564	3564
BK4572-FTK	3804	3804	3804	3804	3804	3804	3804
BK4872-FTK	4047	4047	4047	4047	4047	4047	4047
BK1284-FTK	1179	1179	1179	1179	1179	1179	1179
BK1584-FTK	1473	1473	1473	1473	1473	1473	1473
BK1884-FTK	1770	1770	1770	1770	1770	1770	1770
BK2184-FTK	2061	2061	2061	2061	2061	2061	2061
BK2484-FTK	2355	2355	2355	2355	2355	2355	2355
BK2784-FTK	2592	2592	2592	2592	2592	2592	2592
BK3084-FTK	2946	2946	2946	2946	2946	2946	2946
BK3384-FTK	3240	3240	3240	3240	3240	3240	3240
BK3684-FTK	3534	3534	3534	3534	3534	3534	3534
BK3984-FTK	3831	3831	3831	3831	3831	3831	3831
BK4284-FTK	4125	4125	4125	4125	4125	4125	4125
BK4584-FTK	4416	4416	4416	4416	4416	4416	4416
BK4884-FTK	4713	4713	4713	4713	4713	4713	4713
BK1290-FTK	1263	1263	1263	1263	1263	1263	1263
BK1590-FTK	1581	1581	1581	1581	1581	1581	1581
BK1890-FTK	1899	1899	1899	1899	1899	1899	1899
BK2190-FTK	2205	2205	2205	2205	2205	2205	2205
BK2490-FTK	2523	2523	2523	2523	2523	2523	2523
BK2790-FTK	2841	2841	2841	2841	2841	2841	2841
BK3090-FTK	3156	3156	3156	3156	3156	3156	3156
BK3390-FTK	3471	3471	3471	3471	3471	3471	3471
BK3690-FTK	3786	3786	3786	3786	3786	3786	3786
BK3990-FTK	4104	4104	4104	4104	4104	4104	4104
BK4290-FTK	4422	4422	4422	4422	4422	4422	4422
BK4590-FTK	4734	4734	4734	4734	4734	4734	4734
BK4890-FTK	4752	4752	4752	4752	4752	4752	4752
BK1293-FTK	1344	1344	1344	1344	1344	1344	1344
BK1593-FTK	1683	1683	1683	1683	1683	1683	1683
BK1893-FTK	2022	2022	2022	2022	2022	2022	2022
BK2193-FTK	2355	2355	2355	2355	2355	2355	2355
BK2493-FTK	2694	2694	2694	2694	2694	2694	2694
BK2793-FTK	3030	3030	3030	3030	3030	3030	3030
BK3093-FTK	3366	3366	3366	3366	3366	3366	3366
BK3393-FTK	3702	3702	3702	3702	3702	3702	3702
BK3693-FTK	4041	4041	4041	4041	4041	4041	4041
BK3993-FTK	4377	4377	4377	4377	4377	4377	4377
BK4293-FTK	4716	4716	4716	4716	4716	4716	4716
BK4593-FTK	5046	5046	5046	5046	5046	5046	5046
BK4893-FTK	5385	5385	5385	5385	5385	5385	5385

A-Bristol, Prairie, Savannah15
B-Plateau, Ridgegate, Summerhill
C-Augusta15, Bedford, Charleston15, Easton, Fairway, Gateway, Harbor, Hastings15, Liberty, Seneca, Vicksburg
D-Regency
E-
F-
G-Aspen15, Centennial15, Madison15, Norfolk15, Orleans, Riverton

SEE PAGE 54 FOR DOORS AVAILABLE IN MOLDED & PRICING

CABINET TYPE — OFFICE

96" TALL BOOKCASE

3 1/2" TOP RAIL
96" HAS 5 ADJUSTABLE SHELVES
FINISHED INTERIOR STANDARD
STANDARD 5 3/4" FLUSH TOE KICK
SEE CABINET MOD TAB FOR 3" FLUSH TOE MOD & RECESSED TOE MOD

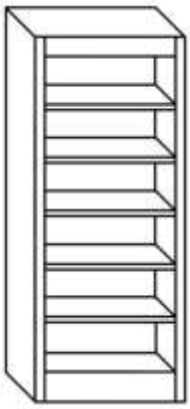

BK1596-FT
N/A OVER 96" TALL OR OVER 48" WIDE

12" DEEP CABINET	LIST PRICE						
	A	B	C	D	E	F	G
BK1296-FTK	1344	1344	1344	1344	1344	1344	1344
BK1596-FTK	1683	1683	1683	1683	1683	1683	1683
BK1896-FTK	2022	2022	2022	2022	2022	2022	2022
BK2196-FTK	2355	2355	2355	2355	2355	2355	2355
BK2496-FTK	2694	2694	2694	2694	2694	2694	2694
BK2796-FTK	3030	3030	3030	3030	3030	3030	3030
BK3096-FTK	3366	3366	3366	3366	3366	3366	3366
BK3396-FTK	3702	3702	3702	3702	3702	3702	3702
BK3696-FTK	4041	4041	4041	4041	4041	4041	4041
BK3996-FTK	4377	4377	4377	4377	4377	4377	4377
BK4296-FTK	4716	4716	4716	4716	4716	4716	4716
BK4596-FTK	5046	5046	5046	5046	5046	5046	5046
BK4896-FTK	5385	5385	5385	5385	5385	5385	5385

84" & 90" BOOKCASE WITH DOORS

3 1/2" TOP RAIL
FINISHED INTERIOR STANDARD
5 ADJUSTABLE SHELVES
STANDARD WITH 5 3/4" FLUSH TOE KICK
BOTTOM DOORS ARE BASE HEIGHT
SEE CABINET MOD TAB FOR 3" FLUSH TOE MOD & RECESSED TOE MOD

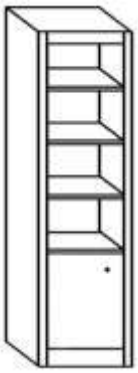

BK1584DL

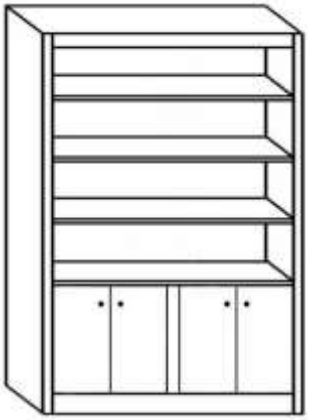

BK4884D-4B

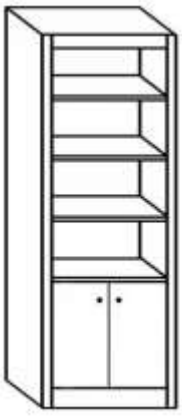

BK2484D-2B

N/A OVER 48" WIDE

84" & 90" BOOKCASE WITH DOORS — 12" DEEP CABINET	LIST PRICE						
	A	B	C	D	E	F	G
BK1284DL-FTK	1455	1470	1557	1557	1575	1596	1713
BK1284DR-FTK	1455	1470	1557	1557	1575	1596	1713
BK1584DL-FTK	1806	1821	1908	1908	1926	1947	2064
BK1584DR-FTK	1806	1821	1908	1908	1926	1947	2064
BK1884DL-FTK	2157	2172	2259	2259	2277	2298	2415
BK1884DR-FTK	2157	2172	2259	2259	2277	2298	2415
BK2184DL-FTK	2505	2520	2607	2607	2625	2646	2763
BK2184DR-FTK	2505	2520	2607	2607	2625	2646	2763
BK2484D-2B-FTK	2907	2937	3063	3063	3105	3138	3315
BK2784D-2B-FTK	3258	3288	3414	3414	3456	3489	3666
BK3084D-2B-FTK	3612	3642	3768	3768	3810	3843	4020
BK3384D-2B-FTK	3957	3987	4113	4113	4155	4188	4365
BK3684D-2B-FTK	4311	4341	4467	4467	4509	4542	4719
BK3984D-2B-FTK	4662	4692	4818	4818	4860	4893	5070
BK4284D-2B-FTK	5013	5043	5169	5169	5211	5244	5421
BK4584D-2B-FTK	5361	5391	5517	5517	5559	5592	5769
BK4884D-4B-FTK	5814	5844	5970	5970	6012	6045	6222
BK1290DL-FTK	1557	1581	1659	1659	1677	1698	1815
BK1290DR-FTK	1557	1581	1659	1659	1677	1698	1815
BK1590DL-FTK	1932	1962	2049	2049	1767	2088	2205
BK1590DR-FTK	1932	1962	2049	2049	1767	2088	2205
BK1890DL-FTK	2310	2325	2412	2412	2430	2451	2568
BK1890DR-FTK	2310	2325	2412	2412	2430	2451	2568
BK2190DL-FTK	2679	2694	2781	2781	2799	2820	2937
BK2190DR-FTK	2679	2694	2781	2781	2799	2820	2937
BK2490D-2B-FTK	3105	3135	3261	3261	3303	3336	3513
BK2790D-2B-FTK	3483	3513	3639	3639	3681	3714	3891
BK3090D-2B-FTK	3861	3891	4017	4017	4059	4092	4269
BK3390D-2B-FTK	4233	4263	4389	4389	4431	4464	4641
BK3690D-2B-FTK	4611	4641	4767	4767	4809	4842	5019
BK3990D-2B-FTK	4989	5019	5145	5145	5187	5220	5397
BK4290D-2B-FTK	5364	5394	5520	5520	5562	5595	5772
BK4590D-2B-FTK	5739	5769	5895	5895	5937	5970	6147
BK4890D-4B-FTK	6216	6246	6372	6372	6414	6447	6624

A-Bristol, Prairie, Savannah15
B-Plateau, Ridgegate, Summerhill
C-Augusta15, Bedford, Charleston15, Easton, Fairway, Gateway, Harbor, Hastings15, Liberty, Seneca, Vicksburg
D-Regency
E-
F-
G-Aspen15, Centennial15, Madison15, Norfolk15, Orleans, Riverton

SEE PAGE 54 FOR DOORS AVAILABLE IN MOLDED & PRICING

CABINET TYPE — OFFICE

93" & 96" BOOKCASE WITH DOORS

3 1/2" TOP RAIL
FINISHED INTERIOR STANDARD
5 ADJUSTABLE SHELVES
STANDARD WITH 5 3/4" FLUSH TOE KICK
SEE CABINET MOD TAB FOR 3" FLUSH TOE MOD & RECESSED TOE MOD
BOTTOM DOORS ARE BASE HEIGHT

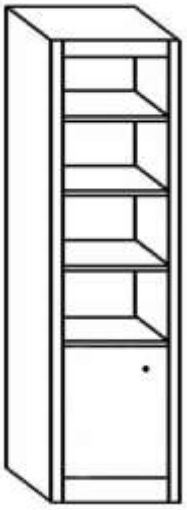

BK1293DL

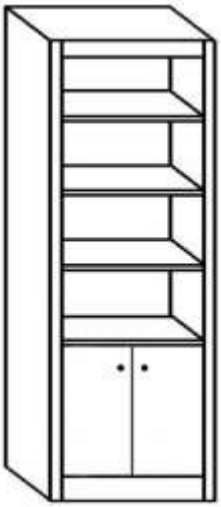

BK2493D-2B

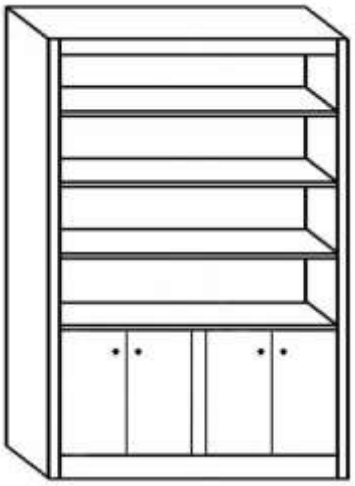

BK4893D-4B

N/A OVER 96" TALL OR OVER 48" WIDE

12" DEEP CABINET	LIST PRICE						
	A	B	C	D	E	F	G
BK1293DL-FTK	1593	1617	1695	1695	1713	1734	1851
BK1293DR-FTK	1593	1617	1695	1695	1713	1734	1851
BK1593DL-FTK	1968	1998	2085	2085	2103	2124	2241
BK1593DR-FTK	1968	1998	2085	2085	2103	2124	2241
BK1893DL-FTK	2346	2361	2448	2448	2466	2487	2604
BK1893DR-FTK	2346	2361	2448	2448	2466	2487	2604
BK2193DL-FTK	2715	2730	2817	2817	2835	2856	2973
BK2193DR-FTK	2715	2730	2817	2817	2835	2856	2973
BK2493D-2B-FTK	3141	3171	3297	3297	3339	3372	3549
BK2793D-2B-FTK	3519	3549	3675	3675	3717	3750	3927
BK3093D-2B-FTK	3897	3927	4053	4053	4095	4128	4305
BK3393D-2B-FTK	4269	4299	4425	4425	4467	4500	4677
BK3693D-2B-FTK	4647	4677	4803	4803	4845	4878	5055
BK3993D-2B-FTK	5025	5055	5181	5181	5223	5256	5433
BK4293D-2B-FTK	5400	5430	5556	5556	5598	5631	5808
BK4593D-2B-FTK	5775	5805	5931	5931	5973	6006	6183
BK4893D-4B-FTK	6252	6282	6408	6408	6450	6483	6660
BK1296DL-FTK	1653	1668	1755	1755	1773	1794	1911
BK1296DR-FTK	1653	1668	1755	1755	1773	1794	1911
BK1596DL-FTK	2055	2070	2157	2157	2175	2196	2313
BK1596DR-FTK	2055	2070	2157	2157	2175	2196	2313
BK1896DL-FTK	2457	2472	2559	2559	2577	2598	2715
BK1896DR-FTK	2457	2472	2559	2559	2577	2598	2715
BK2196DL-FTK	2856	2871	2958	2958	2976	2997	3114
BK2196DR-FTK	2856	2871	2958	2958	2976	2997	3114
BK2496D-2B-FTK	3309	3339	3465	3465	3507	3540	3717
BK2796D-2B-FTK	3708	3738	3864	3864	3906	3939	4116
BK3096D-2B-FTK	4110	4140	4266	4266	4308	4341	4518
BK3396D-2B-FTK	4509	4539	4665	4665	4707	4740	4917
BK3696D-2B-FTK	4911	4941	5067	5067	5109	5142	5319
BK3996D-2B-FTK	5313	5343	5469	5469	5511	5544	5721
BK4296D-2B-FTK	5718	5748	5874	5874	5916	5949	6126
BK4596D-2B-FTK	6111	6141	6183	6183	6225	6258	6435
BK4896D-4B-FTK	6615	6645	6771	6771	6813	6846	7023

A-Bristol, Prairie, Savannah15
B-Plateau, Ridgegate, Summerhill
C-Augusta15, Bedford, Charleston15, Easton, Fairway, Gateway, Harbor, Hastings15, Liberty, Seneca, Vicksburg
D-Regency
E-
F-
G-Aspen15, Centennial15, Madison15, Norfolk15, Orleans, Riverton

SEE PAGE 54 FOR DOORS AVAILABLE IN MOLDED & PRICING

CABINET TYPE — OFFICE

TALL LOCKER CABINET WITH DOORS

3" CENTER RAIL
FINISHED INTERIOR STANDARD
TOP CABINET WILL HAVE 14 1/2" OPENING IN ALL HEIGHTS
NO SHELF



LOCKER1854R

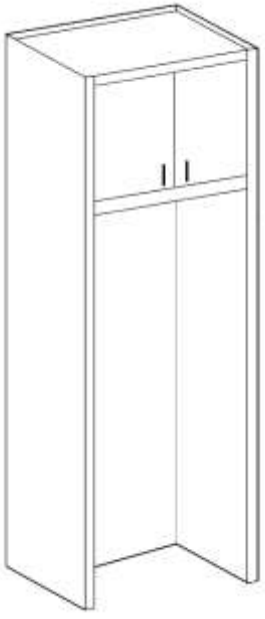

LOCKER3054-2B

LOCKER CABINETS ARE DESIGNED TO SET ON WINDOW SEAT CABINETS WITH WOOD TOPS.

12" DEEP CABINET	LIST PRICE						
	A	B	C	D	E	F	G
LOCKER1854L	2013	2049	2136	2136	2178	2217	2328
LOCKER1854R	2013	2049	2136	2136	2178	2217	2328
LOCKER2154L	2073	2109	2196	2196	2238	2277	2388
LOCKER2154R	2073	2109	2196	2196	2238	2277	2388
LOCKER2454L	2133	2169	2256	2256	2298	2337	2448
LOCKER2454R	2133	2169	2256	2256	2298	2337	2448
LOCKER2754-2B	2334	2370	2457	2457	2499	2538	2649
LOCKER3054-2B	2394	2430	2517	2517	2559	2598	2709
LOCKER3354-2B	2454	2490	2577	2577	2619	2658	2769
LOCKER3654-2B	2520	2556	2643	2643	2685	2724	2835
LOCKER1860L	2058	2094	2181	2181	2223	2262	2373
LOCKER1860R	2058	2094	2181	2181	2223	2262	2373
LOCKER2160L	2118	2154	2241	2241	2283	2322	2433
LOCKER2160R	2118	2154	2241	2241	2283	2322	2433
LOCKER2460L	2178	2214	2301	2301	2343	2382	2493
LOCKER2460R	2178	2214	2301	2301	2343	2382	2493
LOCKER2760-2B	2379	2415	2502	2502	2544	2583	2694
LOCKER3060-2B	2439	2475	2562	2562	2604	2643	2754
LOCKER3360-2B	2499	2535	2622	2622	2664	2703	2814
LOCKER3660-2B	2559	2595	2682	2682	2724	2763	2874
LOCKER1866L	2103	2139	2226	2226	2268	2307	2418
LOCKER1866R	2103	2139	2226	2226	2268	2307	2418
LOCKER2166L	2163	2199	2286	2286	2328	2367	2478
LOCKER2166R	2163	2199	2286	2286	2328	2367	2478
LOCKER2466L	2223	2259	2346	2346	2388	2427	2538
LOCKER2466R	2223	2259	2346	2346	2388	2427	2538
LOCKER2766-2B	2424	2460	2547	2547	2589	2628	2739
LOCKER3066-2B	2484	2520	2607	2607	2649	2688	2799
LOCKER3366-2B	2544	2580	2667	2667	2709	2748	2859
LOCKER3666-2B	2604	2640	2727	2727	2769	2808	2919

A-Bristol, Prairie, Savannah15
B-Plateau, Ridgegate, Summerhill
C-Augusta15, Bedford, Charleston15, Easton, Fairway, Gateway, Harbor, Hastings15, Liberty, Seneca, Vicksburg
D-Regency
E-
F-
G-Aspen15, Centennial15, Madison15, Norfolk15, Orleans, Riverton

SEE PAGE 54 FOR DOORS AVAILABLE IN MOLDED & PRICING

CABINET TYPE — OFFICE

WALL LOCKER CABINET - 15" AND 18" TALL

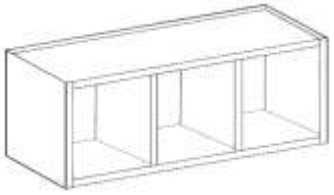

WLC6315-3 3 OPENINGS

1 3/4" STILE AND RAILS - OPENING WIDTH WILL VARY
OPENING HEIGHT FOR 15" TALL CABINET IS 11 1/2"
OPENING HEIGHT FOR 18" TALL CABINET IS 14 1/2"

12" DEEP	LIST PRICE						
	A	B	C	D	E	F	G
WLC2715-1	642	642	642	642	642	642	642
WLC4515-2	1068	1068	1068	1068	1068	1068	1068
WLC6315-3	1497	1497	1497	1497	1497	1497	1497
WLC8615-4	2043	2043	2043	2043	2043	2043	2043
WLC9615-5	2280	2280	2280	2280	2280	2280	2280
WLC2718-1	675	675	675	675	675	675	675
WLC4518-2	1125	1125	1125	1125	1125	1125	1125
WLC6318-3	1575	1575	1575	1575	1575	1575	1575
WLC8618-4	2151	2151	2151	2151	2151	2151	2151
WLC9618-5	2400	2400	2400	2400	2400	2400	2400
CR-W-WLC	225	225	225	225	225	225	225

BASE LOCKER CABINET - 18" TALL

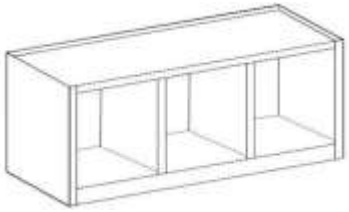

BLC6318U18-3 3 OPENINGS

1 3/4" STILE AND RAILS ON TOP AND SIDES. 3" BOTTOM RAIL
OPENING HEIGHT IS 13 1/4" - OPENING WIDTH WILL VARY
OPENING HEIGHT IS 13 1/4" - OPENING WIDTH WILL VARY

18" OR 21" DEEP	LIST PRICE						
	A	B	C	D	E	F	G
BLC2718U18-1	810	810	810	810	810	810	810
BLC4518U18-2	1350	1350	1350	1350	1350	1350	1350
BLC6318U18-3	1890	1890	1890	1890	1890	1890	1890
BLC8618U18-4	2580	2580	2580	2580	2580	2580	2580
BLC9618U18-5	2880	2880	2880	2880	2880	2880	2880
BLC2718U21-1	879	879	879	879	879	879	879
BLC4518U21-2	1464	1464	1464	1464	1464	1464	1464
BLC6318U21-3	2049	2049	2049	2049	2049	2049	2049
BLC8618U21-4	2808	2808	2808	2808	2808	2808	2808
BLC9618U21-5	3120	3120	3120	3120	3120	3120	3120
CR-W-BLC	225	225	225	225	225	225	225

BASE LOCKER CABINET W/NBR - 15" AND 18" TALL

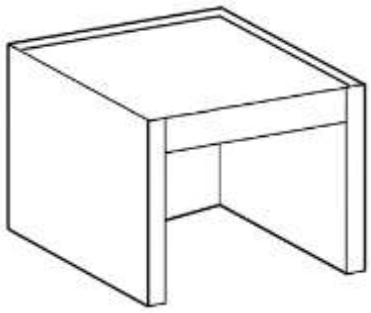

BLC2715U21-NBR-1 1 OPENING

1 3/4" STILES AND 3" TOP RAIL - NO BOTTOM RAIL
OPENING HEIGHT FOR 15" TALL CABINET IS 12"
OPENING HEIGHT FOR 18" TALL CABINET IS 15"
OPENING WIDTH WILL VARY

18" OR 21" DEEP	LIST PRICE						
	A	B	C	D	E	F	G
BLC2715U18-NBR-1	777	777	777	777	777	777	777
BLC4515U18-NBR-2	1293	1293	1293	1293	1293	1293	1293
BLC6315U18-NBR-3	1812	1812	1812	1812	1812	1812	1812
BLC8615U18-NBR-4	2472	2472	2472	2472	2472	2472	2472
BLC9615U18-NBR-5	2760	2760	2760	2760	2760	2760	2760
BLC2718U18-NBR-1	843	843	843	843	843	843	843
BLC4518U18-NBR-2	1407	1407	1407	1407	1407	1407	1407
BLC6318U18-NBR-3	1968	1968	1968	1968	1968	1968	1968
BLC8618U18-NBR-4	2688	2688	2688	2688	2688	2688	2688
BLC9618U18-NBR-5	3000	3000	3000	3000	3000	3000	3000
BLC2715U21-NBR-1	843	843	843	843	843	843	843
BLC4515U21-NBR-2	1407	1407	1407	1407	1407	1407	1407
BLC6315U21-NBR-3	1968	1968	1968	1968	1968	1968	1968
BLC8615U21-NBR-4	2688	2688	2688	2688	2688	2688	2688
BLC9615U21-NBR-5	3000	3000	3000	3000	3000	3000	3000
BLC2718U21-NBR-1	912	912	912	912	912	912	912
BLC4518U21-NBR-2	1518	1518	1518	1518	1518	1518	1518
BLC6318U21-NBR-3	2127	2127	2127	2127	2127	2127	2127
BLC8618U21-NBR-4	2904	2904	2904	2904	2904	2904	2904
BLC9618U21-NBR-5	3240	3240	3240	3240	3240	3240	3240
CR-W-BLC	225	225	225	225	225	225	225

ADDITIONAL INFORMATION FOR WALL AND BASE LOCKER CABINETS

LOCKER CABINET WIDTH CAN ONLY BE DECREASED AND DEPTH DECREASED
USE CODE CR-W-WLC (Custom Reduction-Width-Wall Locker Cabinet) or CODE CR-W-BLC (Custom Reduction-Width-Base Locker Cabinet)
USE CODE CR-D-WLC (Custom Reduction-Depth-Wall Locker Cabinet) or CODE CR-D-BLC (Custom Reduction-Depth-Base Locker Cabinet)

AVAILABLE 24" TO 96" WIDE - FINISHED INTERIOR STANDARD - NO MOD FOR WIDTH INCREASE
24" UP TO 27" WILL HAVE 1 OPENING
27 1/4" UP TO 45" WILL HAVE 2 OPENINGS
45 1/4" UP TO 63" WILL HAVE 3 OPENINGS
63 1/4" UP TO 86" WILL HAVE 4 OPENINGS
86 1/4" UP TO 96" WILL HAVE 5 OPENINGS

A-Bristol, Prairie, Savannah15
B-Plateau, Ridgegate, Summerhill
C-Augusta15, Bedford, Charleston15, Easton, Fairway, Gateway, Harbor, Hastings15, Liberty, Seneca, Vicksburg
D-Regency
E-
F-
G-Aspen15, Centennial15, Madison15, Norfolk15, Orleans, Riverton

SEE PAGE 54 FOR DOORS AVAILABLE IN MOLDED & PRICING

CABINET TYPE — OFFICE

30" TALL OFFICE BASE W/FULL HEIGHT DOOR

ONE ADJUSTABLE FULL DEPTH SHELF
3" FLUSH TOE KICK
L & R INDICATE HINGE SIDE

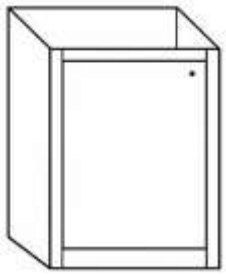

OFB18FHD-FTL

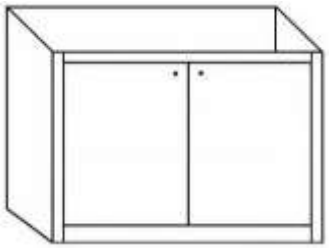

OFB33FHD-2BFT

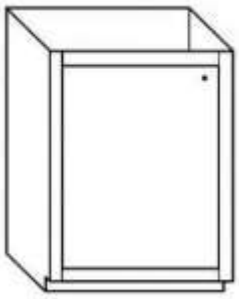

OFB12FHD-L



OFB24FHD-2B

21" DEEP CABINET	LIST PRICE						
	A	B	C	D	E	F	G
FLUSH TOE							
OFB12FHDL-FTK	588	606	678	678	699	747	792
OFB12FHDR-FTK	588	606	678	678	699	747	792
OFB15FHDL-FTK	612	627	708	708	729	777	825
OFB15FHDR-FTK	612	627	708	708	729	777	825
OFB18FHDL-FTK	633	648	741	741	759	807	861
OFB18FHDR-FTK	633	648	741	741	759	807	861
OFB21FHDL-FTK	648	663	771	771	795	843	903
OFB21FHDR-FTK	648	663	771	771	795	843	903
OFB24FHDL-FTK	669	684	807	807	825	873	939
OFB24FHDR-FTK	669	684	807	807	825	873	939
OFB24FHD-2B-FTK	795	810	933	933	954	1002	1065
OFB27FHD-2B-FTK	861	897	1029	1029	1071	1119	1200
OFB30FHD-2B-FTK	876	912	1056	1056	1101	1149	1230
OFB33FHD-2B-FTK	903	939	1098	1098	1137	1185	1275
OFB36FHD-2B-FTK	918	954	1122	1122	1164	1212	1305
RECESSED TOE							
OFB12FHDL-RTK	588	606	678	678	699	747	792
OFB12FHDR-RTK	588	606	678	678	699	747	792
OFB15FHDL-RTK	612	627	708	708	729	777	825
OFB15FHDR-RTK	612	627	708	708	729	777	825
OFB18FHDL-RTK	633	648	741	741	759	807	861
OFB18FHDR-RTK	633	648	741	741	759	807	861
OFB21FHDL-RTK	648	663	771	771	795	843	903
OFB21FHDR-RTK	648	663	771	771	795	843	903
OFB24FHDL-RTK	669	684	807	807	825	873	939
OFB24FHDR-RTK	669	684	807	807	825	873	939
OFB24FHD-2B-RTK	795	810	933	933	954	1002	1065
OFB27FHD-2B-RTK	861	897	1029	1029	1071	1119	1200
OFB30FHD-2B-RTK	876	912	1056	1056	1101	1149	1230
OFB33FHD-2B-RTK	903	939	1098	1098	1137	1185	1275
OFB36FHD-2B-RTK	918	954	1122	1122	1164	1212	1305

30" TALL OFFICE BASE W/DRAWER

ADJUSTABLE 1/2 DEPTH SHELF
3" FLUSH TOE KICK

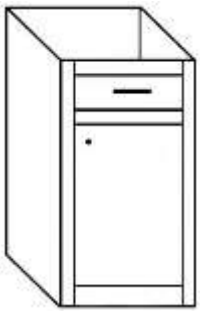

OFB12-FTR



OFB24-2BFT



OFB12-L



OFB24-2B

21" DEEP CABINET	LIST PRICE						
	A	B	C	D	E	F	G
FLUSH TOE							
OFB12L-FTK	816	831	897	897	918	933	1026
OFB12R-FTK	816	831	897	897	918	933	1026
OFB15L-FTK	846	861	936	936	960	972	1071
OFB15R-FTK	846	861	936	936	960	972	1071
OFB18L-FTK	879	894	978	978	999	1017	1119
OFB18R-FTK	879	894	978	978	999	1017	1119
OFB21L-FTK	903	918	1014	1014	1035	1056	1164
OFB21R-FTK	903	918	1014	1014	1035	1056	1164
OFB24L-FTK	933	948	1056	1056	1083	1101	1215
OFB24R-FTK	933	948	1056	1056	1083	1101	1215
OFB24-2B-FTK	1062	1077	1185	1185	1209	1233	1341
OFB27-2B-FTK	1185	1218	1341	1341	1389	1401	1545
OFB30-2B-FTK	1215	1251	1383	1383	1422	1440	1587
OFB33-2B-FTK	1245	1281	1422	1422	1464	1482	1638
OFB36-2B-FTK	1269	1305	1458	1458	1506	1527	1683
RECESSED TOE							
OFB12L-RTK	816	831	897	897	918	933	1026
OFB12R-RTK	816	831	897	897	918	933	1026
OFB15L-RTK	846	861	936	936	960	972	1071
OFB15R-RTK	846	861	936	936	960	972	1071
OFB18L-RTK	879	894	978	978	999	1017	1119
OFB18R-RTK	879	894	978	978	999	1017	1119
OFB21L-RTK	903	918	1014	1014	1035	1056	1164
OFB21R-RTK	903	918	1014	1014	1035	1056	1164
OFB24L-RTK	933	948	1056	1056	1083	1101	1215
OFB24R-RTK	933	948	1056	1056	1083	1101	1215
OFB24-2B-RTK	1062	1077	1185	1185	1209	1233	1341
OFB27-2B-RTK	1185	1218	1341	1341	1389	1401	1545
OFB30-2B-RTK	1215	1251	1383	1383	1422	1440	1587
OFB33-2B-RTK	1245	1281	1422	1422	1464	1482	1638
OFB36-2B-RTK	1269	1305	1458	1458	1506	1527	1683

SEE PAGE 54 FOR DOORS AVAILABLE IN MOLDED & PRICING

CABINET TYPE — OFFICE

30" TALL OFFICE BASE EASY REACH W/SHELF

3/4 DEPTH SHELF IN OFBER33. FULL DEPTH SHELF (WITH NOTCH) ON OFBER36 & 39
FINISHED END NEEDS TO BE ORDERED FOR ANY EXPOSED END
SEE PAGE **279** - END IS SENT LOOSE
NOT AVAILABLE WITH SOFT CLOSE HINGES
L & R INDICATE DOOR HINGE SIDE

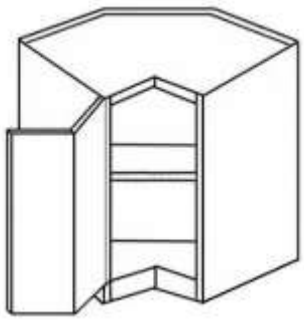

OFBER33-FTL

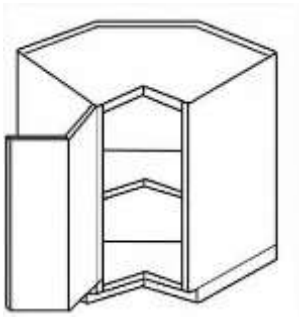

OFBER36L-RTK

21" DEEP CABINET	LIST PRICE A	B	C	D	E	F	G
OFBER33L-FTK	1677	1692	1890	1890	1908	1989	2232
OFBER33R-FTK	1677	1692	1890	1890	1908	1989	2232
OFBER36L-FTK	1710	1743	1917	1917	1965	2022	2265
OFBER36R-FTK	1710	1743	1917	1917	1965	2022	2265
OFBER39L-FTK	1785	1821	1998	1998	2040	2106	2358
OFBER39R-FTK	1785	1821	1998	1998	2040	2106	2358
RECESSED TOE							
OFBER33L-RTK	1677	1692	1890	1890	1908	1989	2232
OFBER33R-RTK	1677	1692	1890	1890	1908	1989	2232
OFBER36L-RTK	1710	1743	1917	1917	1965	2022	2265
OFBER36R-RTK	1710	1743	1917	1917	1965	2022	2265
OFBER39L-RTK	1785	1821	1998	1998	2040	2106	2358
OFBER39R-RTK	1785	1821	1998	1998	2040	2106	2358

5" TALL OFFICE DESK WITH DRAWER

ONLY AVAILABLE WITH SLAB DRAWER FRONTS
EXCEPT FOR MITER DRAWER FRONTS WITH FULL OVERLAY

DRAWER BOX IS 2 1/2" TALL
TOP RAIL IS 1 3/4" TALL

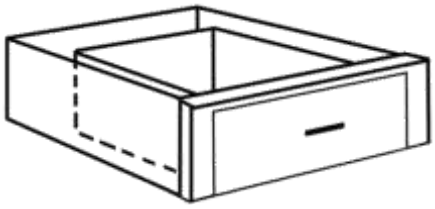

1 3/4" STILES ON NON-TRIMMABLE

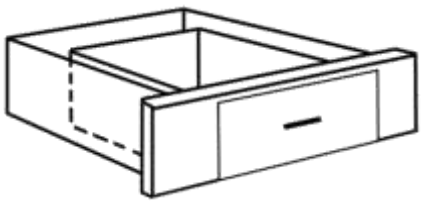

3 1/2" STILES ON TRIMMABLE - CAN BE TRIMED UP TO 3 1/2"

21" DEEP CABINET	LIST PRICE A	B	C	D	E	F	G
NON-TRIMMABLE							
VDK21	537	537	537	537	537	537	537
VDK24	537	537	537	537	537	537	537
VDK27	561	561	561	561	561	561	561
VDK30	561	561	561	561	561	561	561
VDK33	588	588	588	588	588	588	588
VDK36	588	588	588	588	588	588	588
TRIMMABLE							
VDK21-24	537	537	537	537	537	537	537
VDK24-27	561	561	561	561	561	561	561
VDK27-30	561	561	561	561	561	561	561
VDK30-33	588	588	588	588	588	588	588
VDK33-36	588	588	588	588	588	588	588

24" DEEP CABINET	LIST PRICE A	B	C	D	E	F	G
NON-TRIMMABLE							
BDK21	561	561	561	561	561	561	561
BDK24	561	561	561	561	561	561	561
BDK27	588	588	588	588	588	588	588
BDK30	588	588	588	588	588	588	588
BDK33	612	612	612	612	612	612	612
BDK36	612	612	612	612	612	612	612
TRIMMABLE							
BDK21-24	561	561	561	561	561	561	561
BDK24-27	588	588	588	588	588	588	588
BDK27-30	588	588	588	588	588	588	588
BDK30-33	612	612	612	612	612	612	612
BDK33-36	612	612	612	612	612	612	612

A-Bristol, Prairie, Savannah15
B-Plateau, Ridgegate, Summerhill
C-Augusta15, Bedford, Charleston15, Easton, Fairway, Gateway, Harbor, Hastings15, Liberty, Seneca, Vicksburg

D-Regency
E-
F-
G-Aspen15, Centennial15, Madison15, Norfolk15, Orleans, Riverton

SEE PAGE 54 FOR DOORS AVAILABLE IN MOLDED & PRICING

CABINET TYPE — OFFICE

30" TALL DESK OFFICE BASE W/3 DRAWERS

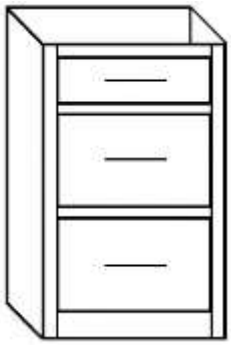

OFB12-3DWR-FT WITH 3" FLUSH TOE KICK

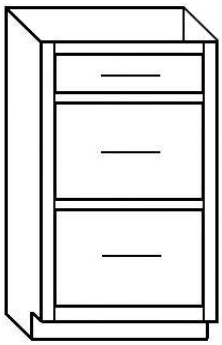

OFB12-3DWR-RT WITH 4" RECESSED TOE KICK

21" DEEP CABINET	LIST PRICE A	B	C	D	E	F	G
FLUSH TOE							
OFB12-3DWR-FT	1404	1404	1404	1404	1404	1404	1404
OFB15-3DWR-FT	1428	1428	1428	1428	1428	1428	1428
OFB18-3DWR-FT	1479	1479	1479	1479	1479	1479	1479
OFB21-3DWR-FT	1536	1536	1536	1536	1536	1536	1536
OFB24-3DWR-FT	1587	1587	1587	1587	1587	1587	1587
OFB27-3DWR-FT	1683	1683	1683	1683	1683	1683	1683
OFB30-3DWR-FT	1863	1863	1863	1863	1863	1863	1863
RECESSED TOE							
OFB12-3DWR-RT	1404	1404	1404	1404	1404	1404	1404
OFB15-3DWR-RT	1428	1428	1428	1428	1428	1428	1428
OFB18-3DWR-RT	1479	1479	1479	1479	1479	1479	1479
OFB21-3DWR-RT	1536	1536	1536	1536	1536	1536	1536
OFB24-3DWR-RT	1587	1587	1587	1587	1587	1587	1587
OFB27-3DWR-RT	1683	1683	1683	1683	1683	1683	1683
OFB30-3DWR-RT	1863	1863	1863	1863	1863	1863	1863

30" TALL OFFICE BASE W/2 STD DWRS & 1 FILE DWR - FLUSH TOE

TOP DRAWERS ARE DOVETAIL WITH 3/4 EXTENSION SIDE MOUNT GUIDES
UPGRADE TO DT-7/8 OR DTUMFE ARE AVAILABLE AND CHARGED ACCORDINGLY

BOTTOM FILE DRAWER WILL HAVE DTUMFE

18" & 21" WIDE FILE BASE WILL COME WITH
REV-A-SHELF SMFD-52 (LETTER) FILE SYSTEM
(NOT INSTALLED)

24" WIDE FILE BASE WILL COME WITH
REV-A-SHELF LGFD-52 FILE SYSTEM (LEGAL)
(NOT INSTALLED)

FILE BASE OVER 24" - HARDWARE NOT INCLUDED

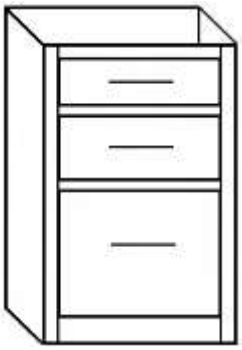

OFFB212DWR1UF-FT WITH 3" FLUSH TOE KICK

21" DEEP CABINET	LIST PRICE A	B	C	D	E	F	G
FLUSH TOE							
OFFB182DWR1UF-FT	2034	2034	2034	2034	2034	2034	2034
OFFB212DWR1UF-FT	2088	2088	2088	2088	2088	2088	2088
OFFB242DWR1UF-FT	2148	2148	2148	2148	2148	2148	2148
OFFB272DWR1UF-FT	2226	2226	2226	2226	2226	2226	2226
OFFB302DWR1UF-FT	2856	2856	2856	2856	2856	2856	2856
OFFB332DWR1UF-FT	3015	3015	3015	3015	3015	3015	3015
OFFB362DWR1UF-FT	3171	3171	3171	3171	3171	3171	3171

A-Bristol, Prairie, Savannah15
B-Plateau, Ridgegate, Summerhill
C-Augusta15, Bedford, Charleston15, Easton, Fairway, Gateway, Harbor, Hastings15, Liberty, Seneca, Vicksburg
D-Regency
E-
F-
G-Aspen15, Centennial15, Madison15, Norfolk15, Orleans, Riverton

SEE PAGE 54 FOR DOORS AVAILABLE IN MOLDED & PRICING

CABINET TYPE — OFFICE

30" TALL OFFICE BASE WITH 2 FILE DWRS - FLUSH TOE

FILE DRAWERS WILL BE DTUMFE

18" & 21" WIDE FILE BASE WILL COME WITH
REV-A-SHELF SMFD-52 (LETTER) FILE SYSTEM (NOT INSTALLED)
(NOT INSTALLED)

24" WIDE FILE BASE WILL COME WITH
REV-A-SHELF LGFD-52 FILE SYSTEM (LEGAL)
(NOT INSTALLED)

FILE BASES OVER 24" - HARDWARE NOT INCLUDED

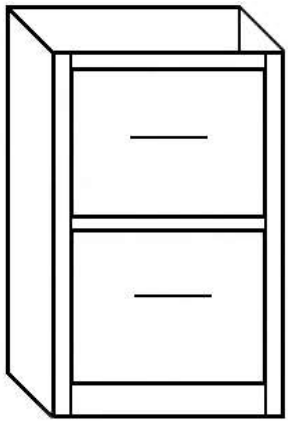

OFFB182UF-FT
3" FLUSH TOE KICK

IF YOU HAVE YOUR OWN HARDWARE FOR THE 18" THRU 24" PLEASE LET US KNOW NOT

21" DEEP CABINET	LIST PRICE						
	A	B	C	D	E	F	G
OFFB182UF-FT	2151	2151	2151	2151	2151	2151	2151
OFFB212UF-FT	2211	2211	2211	2211	2211	2211	2211
OFFB242UF-FT	2265	2265	2265	2265	2265	2265	2265
OFFB272UF-FT	2343	2343	2343	2343	2343	2343	2343
OFFB302UF-FT	2973	2973	2973	2973	2973	2973	2973
OFFB332UF-FT	3132	3132	3132	3132	3132	3132	3132
OFFB362UF-FT	3288	3288	3288	3288	3288	3288	3288

30" TALL OFFICE BASE W/1 STD DWR & 1 FILE DWR - RTK

BOTTOM DRAWER IS DOVETAIL WITH 3/4 EXTENSION SIDE MOUNT GUIDES
UPGRADE TO DT-7/8 OR DTUMFE ARE AVAILABLE AND CHARGED ACCORDINGLY

TOP FILE DRAWER WILL HAVE DTUMFE

18" & 21" WIDE FILE BASE WILL COME WITH
REV-A-SHELF SMFD-52 (LETTER) FILE SYSTEM
(NOT INSTALLED)

24" WIDE FILE BASE WILL COME WITH
REV-A-SHELF LGFD-52 FILE SYSTEM (LEGAL)
(NOT INSTALLED)

FILE BASES OVER 24" - HARDWARE NOT INCLUDED

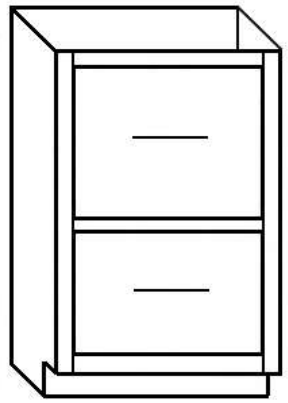

OFFB181DWR1UF-RT WITH 4" RECESSED TOE KICK

21" DEEP CABINET	LIST PRICE						
	A	B	C	D	E	F	G
OFFB181DWR1UF-RT	2064	2064	2064	2064	2064	2064	2064
OFFB211DWR1UF-RT	2124	2124	2124	2124	2124	2124	2124
OFFB241DWR1UF-RT	2178	2178	2178	2178	2178	2178	2178
OFFB271DWR1UF-RT	2256	2256	2256	2256	2256	2256	2256
OFFB301DWR1UF-RT	2886	2886	2886	2886	2886	2886	2886
OFFB331DWR1UF-RT	3045	3045	3045	3045	3045	3045	3045
OFFB361DWR1UF-RT	3201	3201	3201	3201	3201	3201	3201

A-Bristol, Prairie, Savannah15
B-Plateau, Ridgegate, Summerhill
C-Augusta15, Bedford, Charleston15, Easton, Fairway, Gateway, Harbor, Hastings15, Liberty, Seneca, Vicksburg
D-Regency
E-
F-
G-Aspen15, Centennial15, Madison15, Norfolk15, Orleans, Riverton

SEE PAGE 54 FOR DOORS AVAILABLE IN MOLDED & PRICING

CABINET TYPE — OFFICE

5" TALL KEYBOARD PULLOUT WITH FLIP DOWN DWR FRONT

1 3/4" STILES, 7/8" TOP RAIL - NON-TRIMMABLE
SECURES TO ADJACENT CABINETS

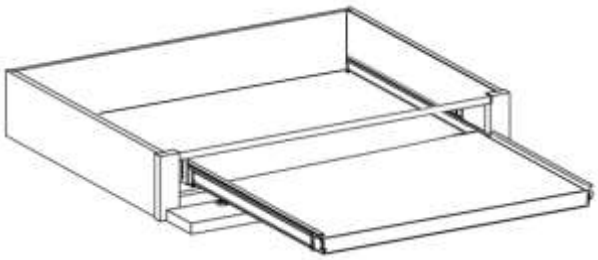

21" DEEP	LIST PRICE						
	A	B	C	D	E	F	G
CKP27-FLIPDOWN	714	714	714	714	714	714	714
CKP30-FLIPDOWN	765	765	765	765	765	765	765

CLASSIC KEYBOARD PULLOUT

MOUNTED UNDERNEATH DESKTOP

INCLUDES ALL HARDWARE

SIDE MOUNT DRAWER GUIDES AND HANGING HARDWARE SENT LOOSE

WILL TAKE UP 30" OF SPACE WITH HARDWARE ATTATCHED



16" DEEP	LIST PRICE						
	A	B	C	D	E	F	G
KP2716-CLASSIC	510	510	510	510	510	510	510

DELUXE KEYBOARD PULLOUT

MOUNTED UNDERNEATH DESKTOP

INCLUDES ALL HARDWARE

SIDE MOUNT DRAWER GUIDES AND HANGING HARDWARE SENT LOOSE

WILL TAKE UP 30" OF SPACE WITH HARDWARE ATTATCHED



16" DEEP	LIST PRICE						
	A	B	C	D	E	F	G
KP2716-DELUXE	810	810	810	810	810	810	810

NOTES OR ADDITIONS

NOTES OR ADDITIONS

PANELS

SKINS

1/4" FINISHED ENDS - FACTORY INSTALLED

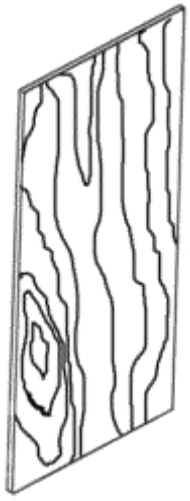

ATTACHED SKIN FOR BASE, WALL, VANITY, TALL, AND OFFICE CABINETS

FINISH END L		36	SF
FINISH END R		36	SF
	MAX DEPTH IS 36"		

ATTACHED SKIN FOR DIAGONAL WALL CABINETS

FINISH WD END L		36	SF
FINISH WD END R		36	SF
	MAX DEPTH IS 36"		

1/4" FINISHED ENDS - SENT LOOSE

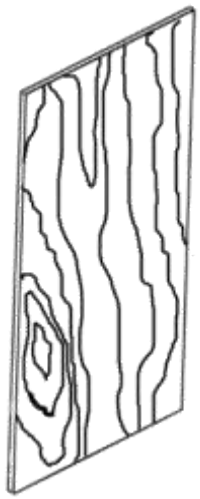

LOOSE SKINS FOR ALL CABINETS

LOOSE END SKIN		36	SF
	FINISHED ON ONE SIDE		
	MAX DEPTH IS 36"		

Clear Species may be used when ordering rustic species for cabinets

PANELS

1/4, 1/2, 3/4 PLYWOOD BASE BACK PANELS

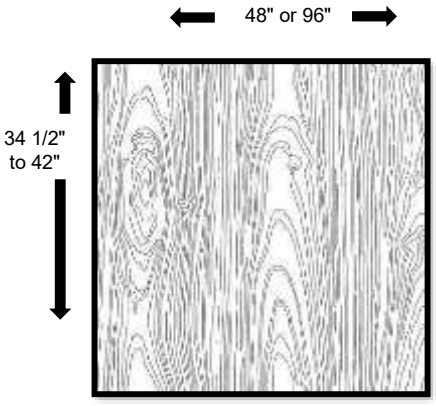

1/2" & 3/4" CAN BE EDGEBANDED PER REQUEST. UPCHARGE IS PER EDGE

1/4 BBS-34 1/2	BACK PANEL (1/4" X 48" X 34 1/2")	297	EA
1/4 BBS-42	BACK PANEL (1/4" X 48" X 42")	297	EA
1/2 BBS-34 1/2	BACK PANEL (1/2" X 48" X 34 1/2")	510	EA
1/2 BBS-42	BACK PANEL (1/2" X 48" X 42")	510	EA
3/4 BBS-34 1/2	BACK PANEL (3/4" X 48" X 34 1/2")	663	EA
3/4 BBS-42	BACK PANEL (3/4" X 48" X 42")	663	EA
1/4 BBS-FW34 1/2	BACK PANEL (1/4" X 96" X 34 1/2")	1200	EA
1/4 BBS-FW42	BACK PANEL (1/4" X 96" X 42")	1200	EA
	NO EDGEBANDING ON 1/4" STOCK		
	RUSTIC WOODS AVAILABLE ARE RUSTIC BEECH , RUSTIC BIRCH, AND KNOTTY ALDER		
BBSEB 1/2L	EDGEBANDING ON LEFT SIDE OF 1/2" BBS	75	EA
BBSEB 1/2R	EDGEBANDING ON RIGHT SIDE OF 1/2" BBS	75	EA
BBSEB 1/2B	EDGEBANDING ON BOTH SIDES OF 1/2" BBS	150	EA
BBSEB 3/4L	EDGEBANDING ON LEFT SIDE OF 3/4" BBS	75	EA
BBSEB 3/4R	EDGEBANDING ON RIGHT SIDE OF 3/4" BBS	75	EA
BBSEB 3/4B	EDGEBANDING ON BOTH SIDES OF 3/4" BBS	150	EA
	FINISHED ON ONE SIDE DUE TO CHARACTERISTICS OF BOOK MATCHED VENEER YOU MAY SEE RIBBON PATTERNING. WE RECOMMEND ATTATCHING FALSE DOORS TO HELP WITH GRAIN & COLOR VARIATION WHEN MULTIPLE PANELS ARE SIDE BY SIDE		

1/4 BEADED BBS

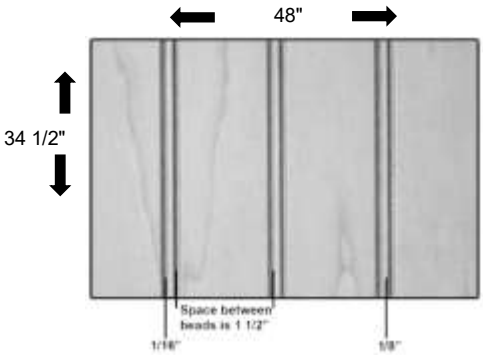

1/4 BEADBBS341/2	1/4" x 48" X 34 1/2"	402	EA
1/4 BEADBBS42	1/4" x 48" X 42"	507	EA
1/4 BEADBBS48	1/4" x 48" X 48"	567	EA
	BEADED PANEL NOT AVAILABLE OVER 48" WIDE OR 48" TALL		
	IF TWO PANELS ARE USED SIDE BY SIDE THERE MAY BE A GRAIN VARIATION BETWEEN THE TWO PANELS		

SHEET STOCK

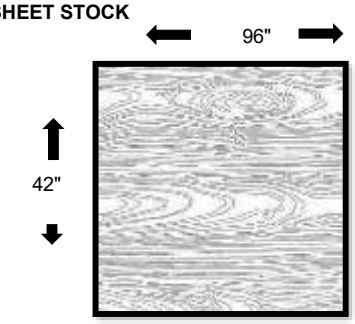

FINSHEETSTOCK 1/4	1/4" X 42" X 96"	900	EA
FINSHEETSTOCK 1/2	1/2" x 42" x 96"	1200	EA
	FINISHED ON ONE SIDE		
	HORIZONTAL GRAIN		

INTEGRATED END PANEL - UP TO 30" WIDE X 96" TALL

N/A IN MITERED DOOR, LIBERTY, BEDFORD, GATEWAY OR HARBOR
NO CUSTOM STILES OR RAILS



BIEPR, VIEPR, OR WIEPR
SHOWN WITH FLUSH TOE KICK

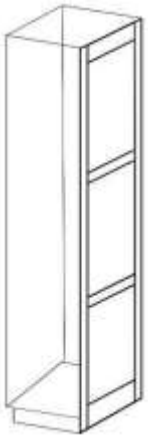

TIEPR
SHOWN WITH FLUSH TOE KICK
THREE EQUAL SIZE PANELS

ATTACHED TO CABINET
END PANEL EDGES ARE NOT FINISHED UNLESS SPECIFIED

WILL BE NOTCHED WITHOUT FLUSH TOE OR DROP STILE

SQUARE WALL END PANEL - 3 7/8" TOP AND BOTTOM

SQUARE BASE, OFFICE, VANITY, OR TALL END PANEL - 3 7/8" TOP AND 5 3/4" BOTTOM

RAILS ON STILE AND RAIL DOORS OVER 42" WILL BE 2 1/2"

MATCHES CHOSEN DOOR STYLE

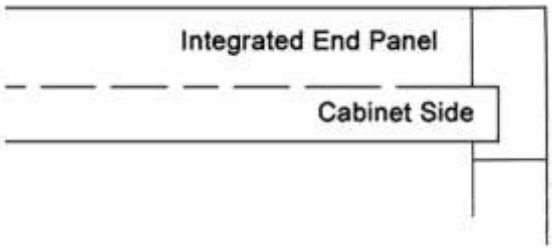

INTEGRATED END PANELS ARE NOT RECOMMENDED FOR RANGE TOP CABINETS, OR FOR ANY CABINET THAT YOU MIGHT CONSIDER USING FOR A DROP IN APPLIANCE.

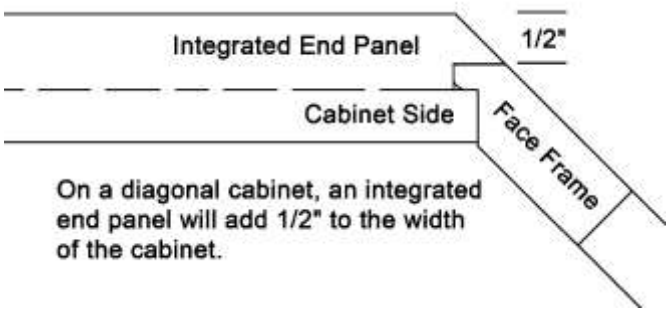

INTEGRATED END PANELS ARE NOT RECOMMENDED FOR DIAGONAL CABINETS. IT WILL ADD 1/2" TO THE WIDTH OF THE CABINET.

BASE END PANEL	CABINET PRICE- PER SQUARE FOOT						
	A	B	C	D	E	F	G
BIEPL	189	213	240	N/A	240	N/A	270
BIEPR	189	213	240	N/A	240	N/A	270

OFFICE END PANEL	CABINET PRICE- PER SQUARE FOOT						
	A	B	C	D	E	F	G
OIEPL	189	213	240	N/A	240	N/A	270
OIEPR	189	213	240	N/A	240	N/A	270

VANITY END PANEL	CABINET PRICE- PER SQUARE FOOT						
	A	B	C	D	E	F	G
VIEPL	189	213	240	N/A	240	N/A	270
VIEPR	189	213	240	N/A	240	N/A	270

WALL END PANEL	CABINET PRICE- PER SQUARE FOOT						
	A	B	C	D	E	F	G
WIEPL	189	213	240	N/A	240	N/A	270
WIEPR	189	213	240	N/A	240	N/A	270

TALL END PANEL	CABINET PRICE- PER SQUARE FOOT						
	A	B	C	D	E	F	G
TIEPL	189	213	240	N/A	240	N/A	270
TIEPR	189	213	240	N/A	240	N/A	270

MOLDED DOOR CHARGE WILL BE ADDED TO COST IF MOLDED DOOR STYLE IS CHOSEN

BASE, VANITY, AND WALL CABINETS HAVE A $77 UPCHARGE

TALL CABINET WILL HAVE A $231 UPCHARGE

N/A OVER 96" TALL

CABINETS OVER 24" DEEP WILL BE TWO PANELS WIDE

PANELS

SHAKER X END PANEL - 34 1/2" TALL

3 7/8" TOP RAIL AND 5 3/4" BOTTOM RAIL - 2 5/8" STILES AVAILABLE IN SHAKER STYLE ONLY
NO ALTERATIONS IN SIZE OF STILES AND RAILS
CROSS SECTION STRIP IS 2 1/2" WIDE AND 3/8" THICK

CAN BE ORDERED LOOSE OR INTEGRATED TO CABINET

X END PANELS WILL BE FINISHED

LOOSE PANELS WILL NOT BE NOTCHED

ALL X PANELS WILL MATCH THE SAVANNAH15 DOOR STYLE.





PANEL PRICE IS PER SQUARE FOOT

INTEGRATED X END PANEL		
BXIEPSHKR-1PNL-L	360	SF
24" to 36" WILL BE ONE PANEL WIDE		
BXIEPSHKR-1PNL-R	360	SF
24" to 36" WILL BE ONE PANEL WIDE		
N/A UNDER 24" WIDE OR OVER 48" WIDE		
LOOSE X END PANEL		
BXEP-SHAKER-1PNL	378	SF
24" to 36" WILL BE ONE PANEL WIDE		
BXEP-SHAKER-2PNL	378	SF
OVER 36" to 48" WILL BE TWO PANELS WIDE		
N/A UNDER 24" WIDE OR OVER 48" WIDE		
FINISH BACK SIDE OF X-PANEL		
BXEPFIN-BACK	750	EA

LOOSE WAINSCOT PANEL - UP TO 96" WIDE X 42" TALL OR WAINSCOT - TALL PANEL UP TO 30" WIDE X 96" TALL

N/A IN MITERED DOOR, LIBERTY, BEDFORD, GATEWAY OR HARBOR



FIELD INSTALLATION ONLY

WILL NOT BE NOTCHED

3 7/8" TOP RAIL AND 5 3/4" BOTTOM RAIL - 2 5/8" STILES

WAINSCOT PANEL EDGES ARE FINISHED

BACK END PANEL	PANEL PRICE - PER SQUARE FOOT						
	A	B	C	D	E	F	G
WAINSCOT	216	255	303	N/A	303	N/A	333
WAINSCOT-TALL	216	255	303	N/A	303	N/A	333

WAINSCOT CUSTOM STILES & RAILS		
STILE MODIFIED FROM 2 5/8" TO 3 5/8"		
WAINSCOT-MODS-3C	255	EA
WAINSCOT-MODS-3L	255	EA
WAINSCOT-MODS-3R	255	EA
STILE MODIFIED FROM 2 5/8" TO 5 3/4"		
WAINSCOT-MODS-5C	255	EA
WAINSCOT-MODS-5L	255	EA
WAINSCOT-MODS-5R	255	EA
TOP RAIL MODIFIED FROM 3 7/8" TO 5 3/4"		
WAINSCOT-MOD5-TR	255	EA
BOTTOM RAIL MODIFIED FROM 5 3/4" TO 3 7/8"		
WAINSCOT-MOD3-BR	255	EA
FINISH BACK SIDE OF WAINSCOT PANEL		
WAINSCOTFIN-BACK	750	EA

UP TO 24" WIDE - 1 PANEL
OVER 24" WIDE UP TO 48" WIDE - 2 PANELS
OVER 48" WIDE UP TO 72" WIDE - 3 PANELS
OVER 72" WIDE UP TO 96" WIDE - 4 PANELS

MOLDED UPCHARGE WILL VARY BY PANEL WIDTH:
24" WIDE - $231, 48" WIDE - $462, 72" WIDE - $693, 96" WIDE - $924

TALL WAINSCOT: UP TO 34 1/2" TALL - 1 PANEL
34 1/2" TALL UP TO 72" TALL - 2 PANELS
OVER 72" TALL TO 96" TALL- 3 PANELS

MOLDED UPCHARGE WILL VARY BY PANELS:
1 PANEL - $231, 2 PANELS - $462, 3 PANELS $693

6.5" MINIMUM WIDTH, 96" MAXIMUM WIDTH

PANELS

DECORATIVE END PANEL

DECORATIVE END

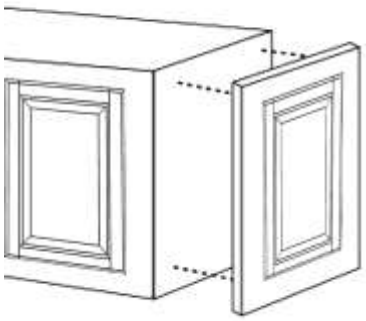

CABINET DOOR USED AS
A DECORATIVE END

BASE			
DDE-BL		945	EA
DDE-BR		945	EA
OFFICE			
DDE-OL		945	EA
DDE-OR		945	EA
VANITY			
DDE-VL		945	EA
DDE-VR		945	EA
WALL			
DDE-WL		765	EA
DDE-WR		765	EA
	BASE, VANITY, OFFICE, AND WALL WILL HAVE ONE DOOR		
PANTRY			
DDE-PL		1650	EA
DDE-PR		1650	EA
	DOORS WILL LINE UP WITH DOORS ON THE FRONT OF TALL CABINETS. PANTRIES WILL HAVE TWO DOORS. IF CABINET IS MORE THAN 24" DEEP, IT WILL BE A TWO PANEL DOOR. INSIDE OF PANEL IS FINISHED - INCLUDES SKINS. MOLDED DOOR CHARGE WILL BE ADDED TO COST IF MOLDED DOOR STYLE IS CHOSEN.		

BASE END PANELS

FINISHED BASE EP 1/2" or 3/4"



FINBEP-1/2	1/2" X 24" X 34 1/2" FINISHED BASE EP (EDGEBANDED)	231	EA
FINBEP-3/4	3/4" X 24" X 34 1/2" FINISHED BASE EP (EDGEBANDED)	408	EA
	SEE PAGE 365 FOR PANEL CUSTOM DEPTH AND HEIGHT		

CLASSIC BASE END PANEL - 1 3/4"

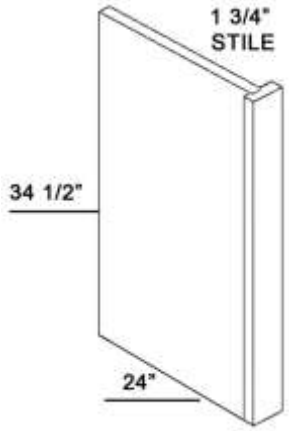

BEP-13/4L	1/2" X 24" X 34 1/2" CLASSIC BASE EP (1 3/4" STILE)	129	EA
BEP-13/4R	1/2" X 24" X 34 1/2" CLASSIC BASE EP (1 3/4" STILE)	129	EA
	NO FINISHED END		
	ADD SKIN FOR FINISHED END - SEE PAGE **279**		
	SEE PAGE 365 FOR PANEL CUSTOM DEPTH AND HEIGHT		
	STILE WIDTH N/A IN CUSTOM SIZES		

PANELS

BASE END PANELS

BIEP RAISED END PANEL - 1 3/4"	**RSDBIEP-1 3/4L**	1/2" X 24" X 34 1/2" BASE RAISED IEP (1 3/4" STILE)	1440	EA
	RSDBIEP-1 3/4R	1/2" X 24" X 34 1/2" BASE RAISED IEP (1 3/4" STILE)	1440	EA
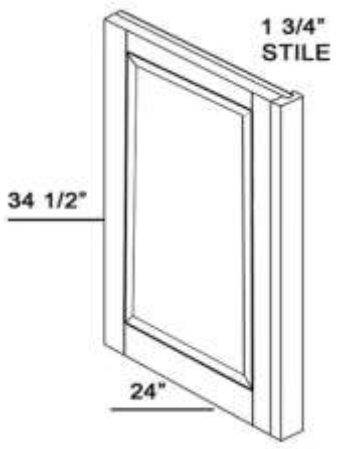		1 3/4" STILE WITH INTEGRATED END PANEL WILL MATCH CHOSEN DOOR STYLE N/A IN MITERED DOOR, BEDFORD, LIBERTY, GATEWAY OR HARBOR DOOR IF ORDERED FOR ANY OF THE DOORS ABOVE, WE WILL DEFAULT TO A SHAKER DOOR STYLE STILE WIDTH N/A IN CUSTOM SIZES 3 7/8" TOP RAIL & 5 3/4" BOTTOM RAIL **REQUIRES CUSTOM QUOTE BY THE CABINET OFFICE IF OVER 36" DEEP AND OVER 24" WIDE** FOR MORE INFORMATION ON INTEGRATED END PANELS SEE PAGE **281**		
CLASSIC BASE END PANEL - 3"	**BEP-3L**	1/2" X 24" X 34 1/2" CLASSIC BASE EP (3" STILE)	153	EA
	BEP-3R	1/2" X 24" X 34 1/2" CLASSIC BASE EP (3" STILE)	153	EA
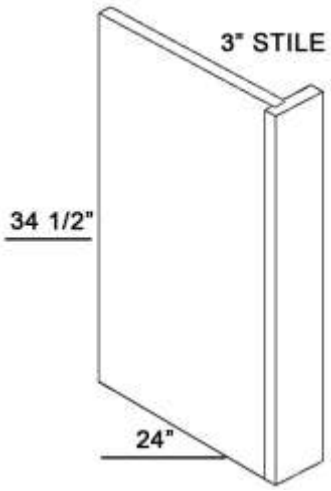		**NO FINISHED END** ADD SKIN FOR FINISHED END - SEE PAGE **279** **SEE PAGE 365 FOR PANEL CUSTOM DEPTH AND HEIGHT** STILE WIDTH N/A IN CUSTOM SIZES		
BIEP RAISED END PANEL - 3"	**RSDBIEP-3L**	1/2" X 24" X 34 1/2" BASE RAISED IEP (3" STILE)	1515	EA
	RSDBIEP-3R	1/2" X 24" X 34 1/2" BASE RAISED IEP (3" STILE)	1515	EA
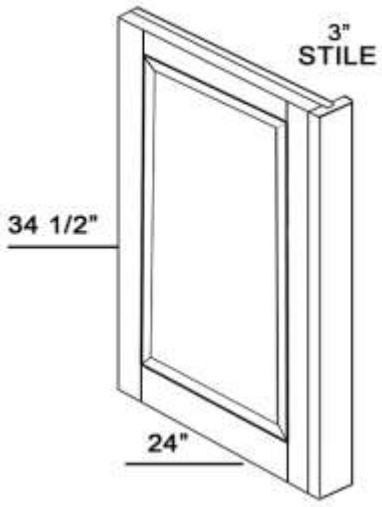		3" STILE WITH INTEGRATED END PANEL WILL MATCH CHOSEN DOOR STYLE N/A IN MITERED DOOR, BEDFORD, LIBERTY, GATEWAY OR HARBOR DOOR IF ORDERED FOR ANY OF THE DOORS ABOVE, WE WILL DEFAULT TO A SHAKER DOOR STYLE 3 7/8" TOP RAIL & 5 3/4" BOTTOM RAIL STILE WIDTH N/A IN CUSTOM SIZES **REQUIRES CUSTOM QUOTE BY THE CABINET OFFICE TO MODIFY HEIGHT OR DEPTH** FOR MORE INFORMATION ON INTEGRATED END PANELS SEE PAGE **281**		

BASE END PANELS

DOUBLE SIDED BASE END PANEL - 3"	**BEPDS-3**	1/2" X 24" X 34 1/2" DBL SIDE BASE EP (3" STILE)	255	EA
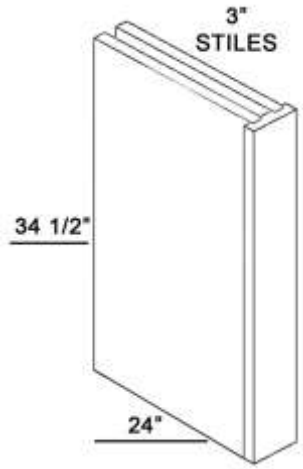		**NO FINISHED END** ADD SKIN FOR FINISHED END - SEE PAGE **279** **SEE PAGE 365 FOR PANEL CUSTOM DEPTH AND HEIGHT** STILE WIDTH N/A IN CUSTOM SIZES		
COLUMN END PANEL - 3"	**BEPCDSU24-3**	3" X 24" X 34 1/2" DBL SIDE BASE COLUMN EP (3" STILE)	381	EA
	BEPCDSU36-3	3" X 36" X 34 1/2" DBL SIDE BASE COLUMN EP (3" STILE)	936	EA
	BEPCDSU48-3	3" X 48" X 34 1/2" DBL SIDE BASE COLUMN EP (3" STILE)	1200	EA
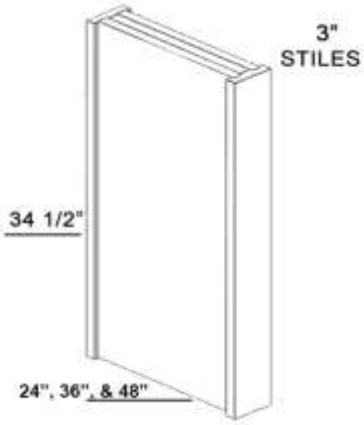		**NO FINISHED END** **ADD SKIN FOR FINISHED END - SEE PAGE 279** **SEE PAGE 365 FOR PANEL CUSTOM DEPTH AND HEIGHT** STILE WIDTH N/A IN CUSTOM SIZES		
BASE END PANEL W/45 ANGLE 3"X3" CLIP	**ABEP-3L**	1/2" X 24" X 34 1/2" CLASSIC BASE EP 45 ANGLE	333	EA
	ABEP-3R	1/2" X 24" X 34 1/2" CLASSIC BASE EP 45 ANGLE	333	EA
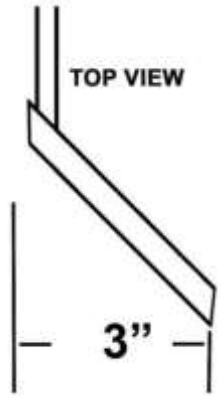 ABEP-3L		**NO FINISHED END** ADD SKIN FOR FINISHED END - SEE PAGE **279** **SEE PAGE 365 FOR PANEL CUSTOM DEPTH AND HEIGHT** STILE WIDTH N/A IN CUSTOM SIZES		

PANELS

BASE END PANELS

CLASSIC BASE END PANEL - 6"	**BEP-6L**	1/2" X 24" X 34 1/2" CLASSIC BASE EP (6" STILE)	180	EA
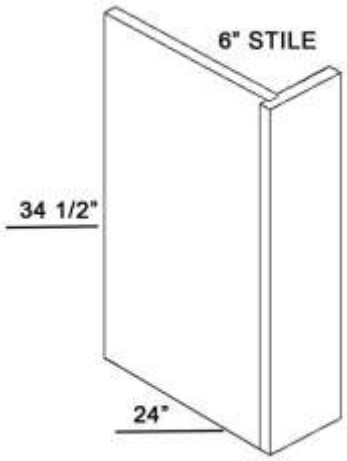	**BEP-6R**	1/2 "X 24" X 34 1/2" CLASSIC BASE EP (6" STILE)	180	EA
		NO FINISHED END		
		ADD SKIN FOR FINISHED END - SEE PAGE **279**		
		SEE PAGE 365 FOR PANEL CUSTOM DEPTH AND HEIGHT		
		STILE WIDTH N/A IN CUSTOM SIZES		
DBL SIDED BASE END PANEL - 6"	**BEPDS-6**	1/2" X 24" X 34 1/2" FINISHED DBL SIDE BASE EP (6" STILE)	285	EA
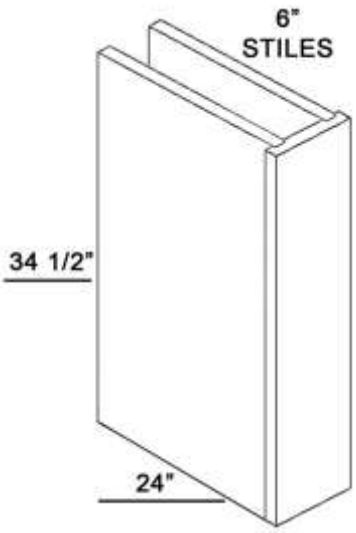		**NO FINISHED END**		
		ADD SKIN FOR FINISHED END - SEE PAGE **279**		
		SEE PAGE 365 FOR PANEL CUSTOM DEPTH AND HEIGHT		
		STILE WIDTH N/A IN CUSTOM SIZES		
COLUMN END PANEL - 6"	**BEPCDSU24-6**	6" X 24" X 34 1/2" DBL SIDE BASE COLUMN EP (6" STILE)	561	EA
	BEPCDSU36-6	6" X 36" X 34 1/2" DBL SIDE BASE COLUMN EP (6" STILE)	1011	EA
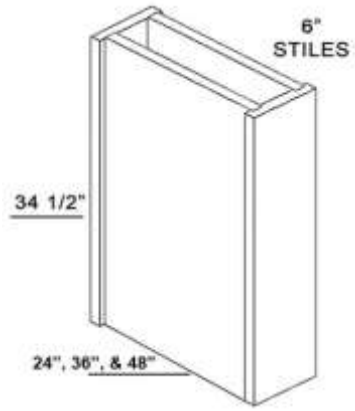	**BEPCDSU48-6**	6" X 48" X 34 1/2" DBL SIDE BASE COLUMN EP (6" STILE)	1320	EA
		NO FINISHED END		
		ADD SKIN FOR FINISHED END - SEE PAGE 279		
		SEE PAGE 365 FOR PANEL CUSTOM DEPTH AND HEIGHT		
		STILE WIDTH N/A IN CUSTOM SIZES		

BASE END PANELS

DBL SIDED BASE END PANEL **With 45 ANGLE - 3" X 3" CLIP**	**ABEPDS-3L**	1/2" X 24" X 34 1/2" DBL SIDE BASE EP W/45 ANGLE	900	EA
	ABEPDS-3R	1/2" X 24" X 34 1/2" DBL SIDE BASE EP W/45 ANGLE	900	EA
		NO FINISHED END		
		ADD SKIN FOR FINISHED END - SEE PAGE **279**		
		SEE PAGE 365 FOR PANEL CUSTOM DEPTH AND HEIGHT		
		STILE WIDTH N/A IN CUSTOM SIZES		

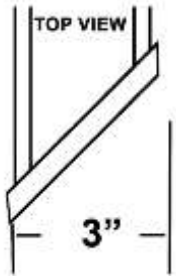

ABEPDS-3R

WALL END PANELS

FINSHED WALL END PANEL - 1/2" & 3/4"

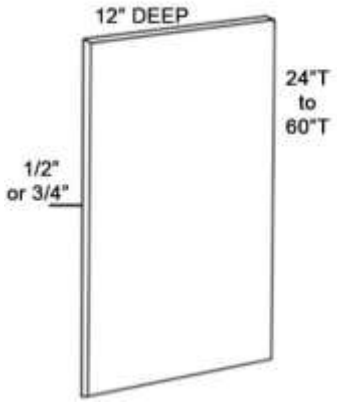

FINWEP24-1/2		234	EA
FINWEP27-1/2		234	EA
FINWEP30-1/2		234	EA
FINWEP36-1/2		234	EA
FINWEP39-1/2		282	EA
FINWEP42-1/2		282	EA
FINWEP45-1/2		282	EA
FINWEP48-1/2		282	EA
FINWEP51-1/2		282	EA
FINWEP54-1/2		336	EA
FINWEP57-1/2		336	EA
FINWEP60-1/2		336	EA
FINWEP24-3/4		384	EA
FINWEP27-3/4		384	EA
FINWEP30-3/4		384	EA
FINWEP36-3/4		384	EA
FINWEP39-3/4		420	EA
FINWEP42-3/4		420	EA
FINWEP45-3/4		420	EA
FINWEP48-3/4		420	EA
FINWEP51-3/4		420	EA
FINWEP54-3/4		510	EA
FINWEP57-3/4		510	EA
FINWEP60-3/4		510	EA
	SEE PAGE 365 FOR PANEL CUSTOM DEPTH AND HEIGHT		
	EDGEBANDED FRONT EDGE		
	FINISHED BOTH SIDES		
	VENEER CORE PLYWOOD		

WALL END PANEL - 1 3/4" STILE

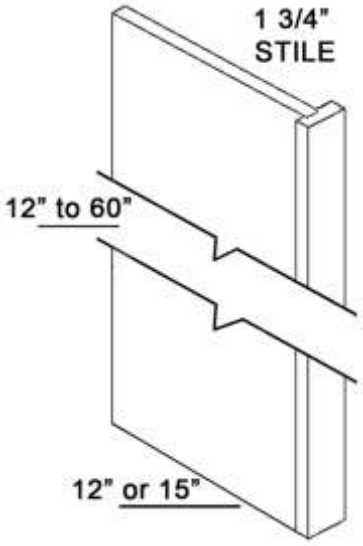

12" DEEP	*__ (INSERT 12,15,18,21,24,27, OR 30)		
WEP*__12-1 3/4L	12" TO 30" T	150	EA
WEP*__12-1 3/4R	12" TO 30" T	150	EA
	*__ (INSERT 36,39,42, OR 48)		
WEP*__12-1 3/4L	31" TO 48" T	195	EA
WEP*__12-1 3/4R	31" TO 48" T	195	EA
	*__ (INSERT 51,54,57,OR 60)		
WEP*__12-1 3/4L	49" TO 60" T	225	EA
WEP*__12-1 3/4R	49" TO 60" T	225	EA
15" DEEP	*__ (INSERT 12,15,18,21,24,27, OR 30)		
WEP*__15-1 3/4L	12" TO 30" T	180	EA
WEP*__15-1 3/4R	12" TO 30" T	180	EA
	*__ (INSERT 36,39,42, OR 48)		
WEP*__15-1 3/4L	31" TO 48" T	225	EA
WEP*__15-1 3/4R	31" TO 48" T	225	EA
	*__ (INSERT 51,54,57,OR 60)		
WEP*__15-1 3/4L	49" TO 60" T	255	EA
WEP*__15-1 3/4R	49" TO 60" T	255	EA
***__ INSERT HEIGHT**			
	NO FINISHED END		
	ADD SKIN FOR FINISHED END - SEE PAGE **279**		
	SEE PAGE 365 FOR PANEL CUSTOM DEPTH AND HEIGHT		
	STILE WIDTH N/A IN CUSTOM SIZES		

PANELS

WALL END PANELS

WALL END PANEL - 3" STILE

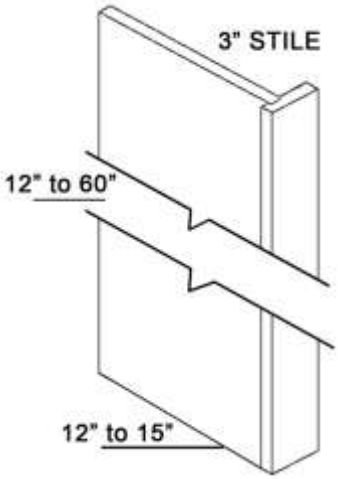

12" DEEP	*__ (INSERT 12,15,18,21,24,27, OR 30)		
WEP*__12-3L	12" TO 30" T	195	EA
WEP*__12-3R	12" TO 30" T	195	EA
	*__ (INSERT 36,39,42, OR 48)		
WEP*__12-3L	31" TO 48" T	240	EA
WEP*__12-3R	31" TO 48" T	240	EA
	*__ (INSERT 51,54,57,OR 60)		
WEP*__12-3L	49" TO 60" T	270	EA
WEP*__12-3R	49" TO 60" T	270	EA
15" DEEP	*__ (INSERT 12,15,18,21,24,27, OR 30)		
WEP*__15-3L	12" TO 30" T	225	EA
WEP*__15-3R	12" TO 30" T	225	EA
	*__ (INSERT 36,39,42, OR 48)		
WEP*__15-3L	31" TO 48" T	255	EA
WEP*__15-3R	31" TO 48" T	255	EA
	*__ (INSERT 51,54,57,OR 60)		
WEP*__15-3L	49" TO 60" T	285	EA
WEP*__15-3R	49" TO 60" T	285	EA
***__ INSERT HEIGHT**			
	NO FINISHED END		
	ADD SKIN FOR FINISHED END - SEE PAGE **279**		
	SEE PAGE 365 FOR PANEL CUSTOM DEPTH AND HEIGHT		
	STILE WIDTH N/A IN CUSTOM SIZES		

WALL END PANEL W/45 ANGLE
3" X 3" CLIP

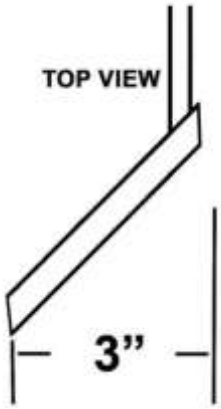

AWEP3012-3R

12" DEEP	*__ (INSERT 12,15,18,21,24,27, OR 30)		
AWEP*__12-3L	12" TO 30" T	495	EA
AWEP*__12-3R	12" TO 30" T	495	EA
	*__ (INSERT 36,39,42, OR 48)		
AWEP*__12-3L	31" TO 48" T	540	EA
AWEP*__12-3R	31" TO 48" T	540	EA
	*__ (INSERT 51,54,57,OR 60)		
AWEP*__12-3L	49" TO 60" T	570	EA
AWEP*__12-3R	49" TO 60" T	570	EA
15" DEEP	*__ (INSERT 12,15,18,21,24,27, OR 30)		
AWEP*__15-3L	12" TO 30" T	510	EA
AWEP*__15-3R	12" TO 30" T	510	EA
	*__ (INSERT 36,39,42, OR 48)		
AWEP*__15-3L	31" TO 48" T	555	EA
AWEP*__15-3R	31" TO 48" T	555	EA
	*__ (INSERT 51,54,57,OR 60)		
AWEP*__15-3L	49" TO 60" T	585	EA
AWEP*__15-3R	49" TO 60" T	585	EA
***__ INSERT HEIGHT**	**NO FINISHED END**		
	ADD SKIN FOR FINISHED END - SEE PAGE **279**		
	SEE PAGE 365 FOR PANEL CUSTOM DEPTH AND HEIGHT		
	STILE WIDTH N/A IN CUSTOM SIZES		

WALL END PANELS

WALL END PANEL - 6" STILE

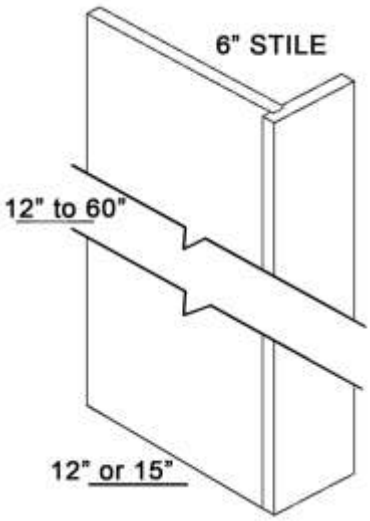

12" DEEP	*__ (INSERT 12,15,18,21,24,27, OR 30)		
WEP*__12-6L	12" TO 30" T	225	EA
WEP*__12-6R	12" TO 30" T	225	EA
	*__ (INSERT 36,39,42, OR 48)		
WEP*__12-6L	31" TO 48" T	270	EA
WEP*__12-6R	31" TO 48" T	270	EA
	*__ (INSERT 51,54,57,OR 60)		
WEP*__12-6L	49" TO 60" T	315	EA
WEP*__12-6R	49" TO 60" T	315	EA
15" DEEP	*__ (INSERT 12,15,18,21,24,27, OR 30)		
WEP*__15-6L	12" TO 30" T	255	EA
WEP*__15-6R	12" TO 30" T	255	EA
	*__ (INSERT 36,39,42, OR 48)		
WEP*__15-6L	31" TO 48" T	300	EA
WEP*__15-6R	31" TO 48" T	300	EA
	*__ (INSERT 51,54,57,OR 60)		
WEP*__15-6L	49" TO 60" T	345	EA
WEP*__15-6R	49" TO 60" T	345	EA
***__ INSERT HEIGHT**	**NO FINISHED END**		
	ADD SKIN FOR FINISHED END - SEE PAGE **279**		
	SEE PAGE 365 FOR PANEL CUSTOM DEPTH AND HEIGHT		
	STILE WIDTH N/A IN CUSTOM SIZES		

DBL SIDED WALL END PANEL - 3" STILE

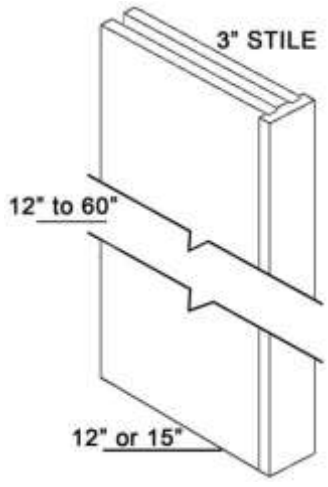

12" DEEP	*__ (INSERT 12,15,18,21,24,27, OR 30)		
WEPDS*__12-3	12" TO 30" T	300	EA
	*__ (INSERT 36,39,42, OR 48)		
WEPDS*__12-3	31" TO 48" T	345	EA
	*__ (INSERT 51,54,57,OR 60)		
WEPDS*__12-3	49" TO 60" T	375	EA
15" DEEP	*__ (INSERT 12,15,18,21,24,27, OR 30)		
WEPDS*__15-3	12" TO 30" T	330	EA
	*__ (INSERT 36,39,42, OR 48)		
WEPDS*__15-3	31" TO 48" T	375	EA
	*__ (INSERT 51,54,57,OR 60)		
WEPDS*__15-3	49" TO 60" T	420	EA
	NO FINISHED END		
***__ INSERT HEIGHT**	ADD SKIN FOR FINISHED END - SEE PAGE **279**		
	SEE PAGE 365 FOR PANEL CUSTOM DEPTH AND HEIGHT		
	STILE WIDTH N/A IN CUSTOM SIZES		

PANELS

WALL END PANELS

DBL SIDED WALL END PANEL
W/45 ANGLE - 3" X 3" CLIP

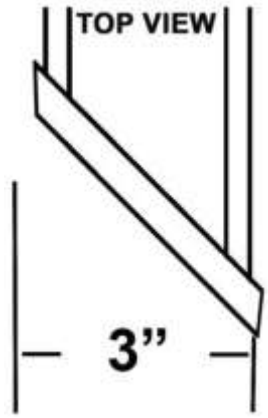

AWEPDS3012-3L

12" DEEP	*__ (INSERT 12,15,18,21,24,27, OR 30)		
AWEPDS*__12-3L	12" TO 30" T	900	EA
AWEPDS*__12-3R	12" TO 30" T	900	EA
	*__ (INSERT 36,39,42, OR 48)		
AWEPDS*__12-3L	31" TO 48" T	945	EA
AWEPDS*__12-3R	31" TO 48" T	945	EA
	*__ (INSERT 51,54,57,OR 60)		
AWEPDS*__12-3L	49" TO 60" T	975	EA
AWEPDS*__12-3R	49" TO 60" T	975	EA
15" DEEP	*__ (INSERT 12,15,18,21,24,27, OR 30)		
AWEPDS*__15-3L	12" TO 30" T	930	EA
AWEPDS*__15-3R	12" TO 30" T	930	EA
	*__ (INSERT 36,39,42, OR 48)		
AWEPDS*__15-3L	31" TO 48" T	975	EA
AWEPDS*__15-3R	31" TO 48" T	975	EA
	*__ (INSERT 51,54,57,OR 60)		
AWEPDS*__15-3L	49" TO 60" T	1005	EA
AWEPDS*__15-3R	49" TO 60" T	1005	EA
	NO FINISHED END		
***__ INSERT HEIGHT**	ADD SKIN FOR FINISHED END - SEE PAGE **279**		
	SEE PAGE 365 FOR PANEL CUSTOM DEPTH AND HEIGHT		
	STILE WIDTH N/A IN CUSTOM SIZES		

DBL SIDED WALL END PANEL - 6" STILE

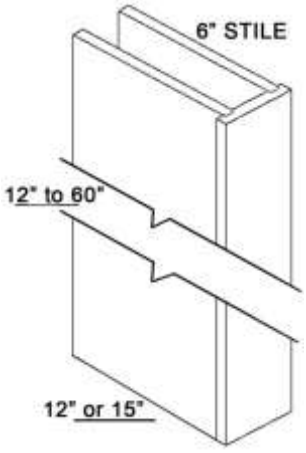

12" DEEP	*__ (INSERT 12,15,18,21,24,27, OR 30)		
WEPDS*__12-6	12" TO 30" T	300	EA
	*__ (INSERT 36,39,42, OR 48)		
WEPDS*__12-6	31" TO 48" T	345	EA
	*__ (INSERT 51,54,57,OR 60)		
WEPDS*__12-6	49" TO 60" T	390	EA
15" DEEP	*__ (INSERT 12,15,18,21,24,27, OR 30)		
WEPDS*__15-6	12" TO 30" T	330	EA
	*__ (INSERT 36,39,42, OR 48)		
WEPDS*__15-6	31" TO 48" T	375	EA
	*__ (INSERT 51,54,57,OR 60)		
WEPDS*__15-6	49" TO 60" T	420	EA
	NO FINISHED END		
	ADD SKIN FOR FINISHED END - SEE PAGE **279**		
***__ INSERT HEIGHT**	**SEE PAGE 365 FOR PANEL CUSTOM DEPTH AND HEIGHT**		
	STILE WIDTH N/A IN CUSTOM SIZES		

FINISHED END PANELS

FINISHED OFFICE END PANEL - 1/2" & 3/4"	**FINOEP-1/2**	1/2" X 21" X 30" FINISHED OFFICE EP	204	EA
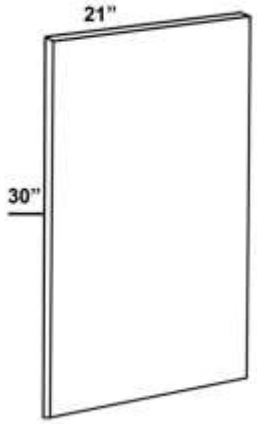	**FINOEP-3/4**	3/4" X 21" X 30" FINISHED OFFICE EP	375	EA
		EDGEBANDED FRONT EDGE		
		FINISHED BOTH SIDES		
		VENEER CORE PLYWOOD		
		SEE PAGE 365 FOR PANEL CUSTOM DEPTH AND HEIGHT		
FINISHED OFFICE END PANEL - TAPERED	**FINOEP-1/2TAPERL**	1/2" X 21" X 30" FINISHED OFFICE END PANEL TAPERED MINOR INPERFECTIONS MAY BE PRESENT ON RIGHT SIDE	330	EA
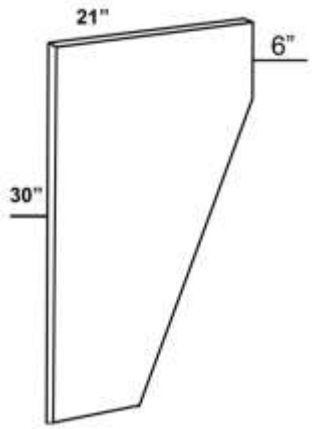	**FINOEP-1/2TAPERR**	1/2" X 21" X 30" FINISHED OFFICE END PANEL TAPERED MINOR INPERFECTIONS MAY BE PRESENT ON LEFT SIDE	330	EA
	FINOEP-3/4TAPERL	3/4" X 21" X 30" FINISHED OFFICE BASE END PANEL TAPERED MINOR INPERFECTIONS MAY BE PRESENT ON RIGHT SIDE	510	EA
	FINOEP-3/4TAPERR	3/4" X 21" X 30" FINISHED OFFICE BASE END PANEL TAPERED MINOR INPERFECTIONS MAY BE PRESENT ON LEFT SIDE	510	EA
		EDGEBANDED FRONT EDGE		
		FINISHED BOTH SIDES		
		VENEER CORE PLYWOOD		
		SEE PAGE 365 FOR PANEL CUSTOM DEPTH AND HEIGHT		
FINISHED VANITY END PANEL - TAPERED	**FINVEP-1/2TPL**	1/2X21"X32 1/2" FINISHED VANITY END PANEL TAPERED MINOR INPERFECTIONS MAY BE PRESENT ON RIGHT SIDE	435	EA
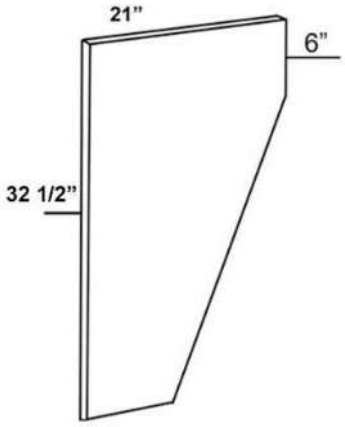	**FINVEP-1/2TPR**	1/2X21"X32 1/2" FINISHED VANITY END PANEL TAPERED MINOR INPERFECTIONS MAY BE PRESENT ON LEFT SIDE	435	EA
	FINVEP-3/4TPL	3/4"X21"X32 1/2" FINISHED VANITY END PANEL TAPERED MINOR INPERFECTIONS MAY BE PRESENT ON RIGHT SIDE	615	EA
	FINVEP-3/4TPR	3/4"X21"X32 1/2" FINISHED VANITY END PANEL TAPERED MINOR INPERFECTIONS MAY BE PRESENT ON LEFT SIDE	615	EA
		EDGEBANDED FRONT EDGE		
		FINISHED BOTH ENDS		
		SEE PAGE 365 FOR PANEL CUSTOM DEPTH AND HEIGHT		

PANELS

FINISHED END PANELS

FINISHED VANITY END PANEL-1/2" & 3/4"	**FINVEP-1/2**	1/2" X 21" X 32 1/2" FINISHED VANITY EP	309	EA
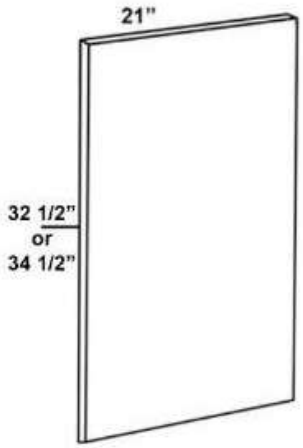	**FINVEPAH-1/2**	1/2" X 21" X 34 1/2" FINISHED VANITY EP	414	EA
	FINVEP-3/4	3/4" X 21" X 32 1/2" FINISHED VANITY EP	480	EA
	FINVEPAH-3/4	3/4" X 21" X 34 1/2" FINISHED VANITY EP	585	EA
		EDGEBANDED FRONT EDGE		
		FINISHED BOTH SIDES		
		VENEER CORE PLYWOOD		
		SEE PAGE 365 FOR PANEL CUSTOM DEPTH AND HEIGHT		
FINISHED VANITY END PANELS	**VEP-1 3/4**	1 3/4" X 21" X 32 1/2" FINISHED VANITY EP	651	EA
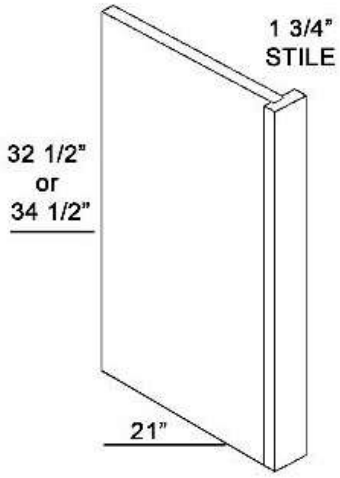	**VEPAH-1 3/4**	1 3/4" X 21" X 34 1/2" FINISHED VANITY EP	756	EA
		INSIDE PANEL IS FINISHED		
		FOR FINISHED OUTSIDE PANEL ORDER SKIN ON PAGE 279		
FINISHED VANITY END PANEL	**VEP-3**	3" X 21" X 32 1/2" FINISHED VANITY EP	831	EA
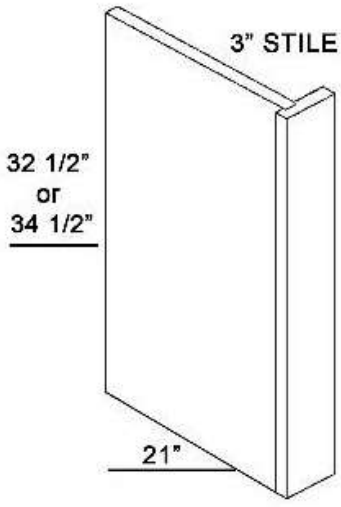	**VEPAH-3**	3" X 21" X 34 1/2" FINISHED VANITY EP	936	EA
		INSIDE PANEL IS FINISHED		
		FOR FINISHED OUTSIDE PANEL ORDER SKIN ON PAGE 279		

REFRIGERATOR END PANELS

FINISHED REFRIGERATOR END - 1/2"

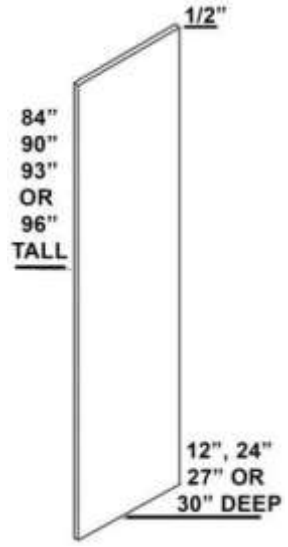

FINISHED ON BOTH SIDES
MINOR IMPERFECTIONS ARE
TO BE EXPECTED ON ONE SIDE

FREPU1284-1/2	1/2" FREP - 12"W X 84"T	345	EA
FREPU1290-1/2	1/2" FREP - 12"W X 90"T	375	EA
FREPU1293-1/2	1/2" FREP - 12"W X 93"T	405	EA
FREPU1296-1/2	1/2" FREP - 12"W X 96"T	435	EA
FREPU2484-1/2	1/2" FREP - 24"W X 84"T	675	EA
FREPU2490-1/2	1/2" FREP - 24"W X 90"T	705	EA
FREPU2493-1/2	1/2" FREP - 24"W X 93"T	735	EA
FREPU2496-1/2	1/2" FREP - 24"W X 96"T	765	EA
FREPU2784-1/2	1/2" FREP - 27"W X 84"T	735	EA
FREPU2790-1/2	1/2" FREP - 27"W X 90"T	765	EA
FREPU2793-1/2	1/2" FREP - 27"W X 93"T	780	EA
FREPU2796-1/2	1/2" FREP - 27"W X 96"T	825	EA
FREPU3084-1/2	1/2" FREP - 30"W X 84"T	915	EA
FREPU3090-1/2	1/2" FREP - 30"W X 90"T	945	EA
FREPU3093-1/2	1/2" FREP - 30"W X 93"T	975	EA
FREPU3096-1/2	1/2" FREP - 30"W X 96"T	1005	EA

EDGEBANDED ON ONE 84", 90", 93", OR 96" EDGE

SEE PAGE 365 FOR PANEL CUSTOM DEPTH AND HEIGHT
N/A OVER 96" TALL OR 30" DEEP

FINISHED REFRIGERATOR END - 3/4"

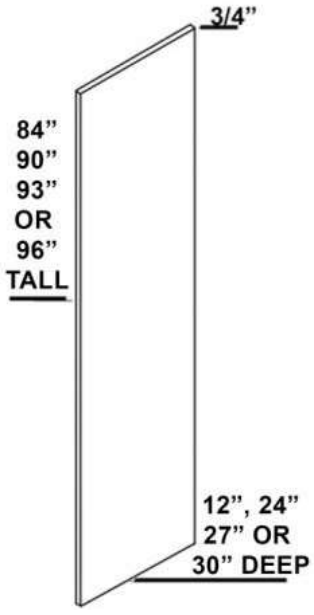

FINISHED ON BOTH SIDES
MINOR IMPERFECTIONS ARE
TO BE EXPECTED ON ONE SIDE

FREPU1284-3/4	3/4" FREP - 12"W X 84"T	870	EA
FREPU1290-3/4	3/4" FREP - 12"W X 90"T	900	EA
FREPU1293-3/4	3/4" FREP - 12"W X 93"T	930	EA
FREPU1296-3/4	3/4" FREP - 12"W X 96"T	960	EA
FREPU2484-3/4	3/4" FREP - 24"W X 84"T	1110	EA
FREPU2490-3/4	3/4" FREP - 24"W X 90"T	1140	EA
FREPU2493-3/4	3/4" FREP - 24"W X 93"T	1170	EA
FREPU2496-3/4	3/4" FREP - 24"W X 96"T	1200	EA
FREPU2784-3/4	3/4" FREP - 27"W X 84"T	1170	EA
FREPU2790-3/4	3/4" FREP - 27"W X 90"T	1200	EA
FREPU2793-3/4	3/4" FREP - 27"W X 93"T	1230	EA
FREPU2796-3/4	3/4" FREP - 27"W X 96"T	1260	EA
FREPU3084-3/4	3/4" FREP - 30"W X 84"T	1350	EA
FREPU3090-3/4	3/4" FREP - 30"W X 90"T	1380	EA
FREPU3093-3/4	3/4" FREP - 30"W X 93"T	1410	EA
FREPU3096-3/4	3/4" FREP - 30"W X 96"T	1440	EA

EDGEBANDED ON ONE 84", 90", 93", OR 96" EDGE

SEE PAGE 365 FOR PANEL CUSTOM DEPTH AND HEIGHT
N/A OVER 96" TALL OR 30" DEEP

PANELS

REFRIGERATOR END PANELS

REFRIGERATOR END - 1 3/4"

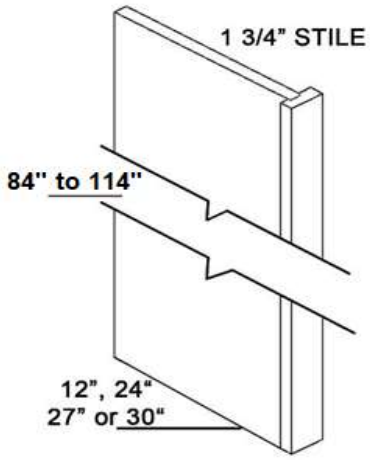

N/A OVER 30" DEEP

INSIDE PANEL IS FINISHED

FOR FINISHED OUTSIDE PANEL ORDER SKIN ON PG 279

REPU1284-13/4*_	1/2" REP - 12"W X 84"T (1 3/4" STILE)	495	EA
REPU1290-13/4*_	1/2" REP - 12"W X 90"T (1 3/4" STILE)	495	EA
REPU1293-13/4*_	1/2" REP - 12"W X 93"T (1 3/4" STILE)	495	EA
REPU1296-13/4*_	1/2" REP - 12"W X 96"T (1 3/4" STILE)	495	EA
REPU12102-13/4*_	1/2" REP - 12"W X 102"T (1 3/4" STILE)	795	EA
REPU12108-13/4*_	1/2" REP - 12"W X 108"T (1 3/4" STILE)	1170	EA
REPU12114-13/4*_	1/2" REP - 12"W X 114"T (1 3/4" STILE)	1425	EA
REPU2484-13/4*_	1/2" REP - 24"W X 84"T (1 3/4" STILE)	690	EA
REPU2490-13/4*_	1/2" REP - 24"W X 90"T (1 3/4" STILE)	690	EA
REPU2493-13/4*_	1/2" REP - 24"W X 93"T (1 3/4" STILE)	690	EA
REPU2496-13/4*_	1/2" REP - 24"W X 96"T (1 3/4" STILE)	690	EA
REPU24102-13/4*_	1/2" REP - 24"W X 102"T (1 3/4" STILE)	870	EA
REPU24108-13/4*_	1/2" REP - 24"W X 108"T (1 3/4" STILE)	1245	EA
REPU24114-13/4*_	1/2" REP - 24"W X 114"T (1 3/4" STILE)	1500	EA
REPU2784-13/4*_	1/2" REP - 27"W X 84"T (1 3/4" STILE)	810	EA
REPU2790-13/4*_	1/2" REP - 27"W X 90"T (1 3/4" STILE)	810	EA
REPU2793-13/4*_	1/2" REP - 27"W X 93"T (1 3/4" STILE)	810	EA
REPU2796-13/4*_	1/2" REP - 27"W X 96"T (1 3/4" STILE)	810	EA
REPU27102-13/4*_	1/2" REP - 27"W X 102"T (1 3/4" STILE)	1095	EA
REPU27108-13/4*_	1/2" REP - 27"W X 108"T (1 3/4" STILE)	1470	EA
REPU27114-13/4*_	1/2" REP - 27"W X 114"T (1 3/4" STILE)	1725	EA
REPU3084-13/4*_	1/2" REP - 30"W X 84"T (1 3/4" STILE)	870	EA
REPU3090-13/4*_	1/2" REP - 30"W X 90"T (1 3/4" STILE)	870	EA
REPU3093-13/4*_	1/2" REP - 30"W X 93"T (1 3/4" STILE)	870	EA
REPU3096-13/4*_	1/2" REP - 30"W X 96"T (1 3/4" STILE)	870	EA
REPU30102-13/4*_	1/2" REP - 30"W X 102"T (1 3/4" STILE)	1155	EA
REPU30108-13/4*_	1/2" REP - 30"W X 108"T (1 3/4" STILE)	1530	EA
REPU30114-13/4*_	1/2" REP - 30"W X 114"T (1 3/4" STILE)	1785	EA
***_ INSERT L OR R**			

SEE PAGE 365 FOR PANEL CUSTOM DEPTH AND HEIGHT
STILE WIDTH N/A IN CUSTOM SIZES

FINISHED REFRIGERATOR INTEGRATED END PANEL - 1 3/4"

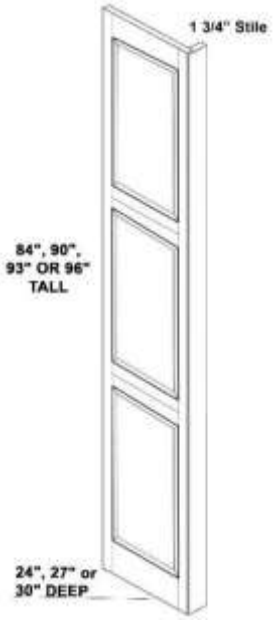

INSIDE OF PANEL IS FINISHED

RIEPU2484-13/4*_	1/2" RREP - 24"W X 84"T (1 3/4" STILE)	3600	EA
RIEPU2490-13/4*_	1/2" RREP - 24"W X 90"T (1 3/4" STILE)	3900	EA
RIEPU2493-13/4*_	1/2" RREP - 24"W X 93"T (1 3/4" STILE)	4200	EA
RIEPU2496-13/4*_	1/2" RREP - 24"W X 96"T (1 3/4" STILE)	4500	EA
RIEPU2784-13/4*_	1/2" RREP - 27"W X 84"T (1 3/4" STILE)	4050	EA
RIEPU2790-13/4*_	1/2" RREP - 27"W X 90"T (1 3/4" STILE)	4500	EA
RIEPU2793-13/4*_	1/2" RREP - 27"W X 93"T (1 3/4" STILE)	4950	EA
RIEPU2796-13/4*_	1/2" RREP - 27"W X 96"T (1 3/4" STILE)	5400	EA
RIEPU3084-13/4*_	1/2" RREP - 30"W X 84"T (1 3/4" STILE)	4500	EA
RIEPU3090-13/4*_	1/2" RREP - 30"W X 90"T (1 3/4" STILE)	5100	EA
RIEPU3093-13/4*_	1/2" RREP - 30"W X 93"T (1 3/4" STILE)	5700	EA
RIEPU3096-13/4*_	1/2" RREP - 30"W X 96"T (1 3/4" STILE)	6300	EA
***_ INSERT L OR R**			

27" & 30" DEEP END WILL HAVE 6 PANELS

1 3/4" STILE WITH INTEGRATED END PANEL WILL MATCH CHOSEN DOOR STYLE

3 7/8" TOP RAIL & 5 3/4" BOTTOM RAIL

N/A IN MITERED DOOR, LIBERTY, BEDFORD, HARBOR OR GATEWAY

FOR MORE INFORMATION ON INTEGRATED END PANELS SEE PAGE 281

N/A OVER 96" TALL OR 30" DEEP

REFRIGERATOR END PANELS

FINISHED REFRIGERATOR INTEGRATED END PANEL - 3"	**RIEPU2484-3*_**	1/2" RREP - 24"W X 84"T (3" STILE)	3750	EA
	RIEPU2490-3*_	1/2" RREP - 24"W X 90"T (3" STILE)	4050	EA
	RIEPU2493-3*_	1/2" RREP - 24"W X 93"T (3" STILE)	4350	EA
	RIEPU2496-3*_	1/2" RREP - 24"W X 96"T (3" STILE)	4650	EA
	RIEPU2784-3*_	1/2" RREP - 27"W X 84"T (3" STILE)	4200	EA
	RIEPU2790-3*_	1/2" RREP - 27"W X 90"T (3" STILE)	4650	EA
	RIEPU2793-3*_	1/2" RREP - 27"W X 93"T (3" STILE)	5100	EA
	RIEPU2796-3*_	1/2" RREP - 27"W X 96"T (3" STILE)	5550	EA
	RIEPU3084-3*_	1/2" RREP - 30"W X 84"T (3" STILE)	4650	EA
	RIEPU3090-3*_	1/2" RREP - 30"W X 90"T (3" STILE)	5250	EA
	RIEPU3093-3*_	1/2" RREP - 30"W X 93"T (3" STILE)	5850	EA
	RIEPU3096-3*_	1/2" RREP - 30"W X 96"T (3" STILE)	6450	EA
	***_ INSERT L OR R**			
		27" & 30" DEEP END WILL HAVE 6 PANELS		
		3" STILE WITH INTEGRATED END PANEL WILL MATCH CHOSEN DOOR STYLE		
		N/A OVER 96" TALL OR 30" DEEP		
		N/A IN MITERED DOOR, LIBERTY, BEDFORD, HARBOR OR GATEWAY		
		3 7/8" TOP RAIL & 5 3/4" BOTTOM RAIL		
		FOR MORE INFORMATION ON INTEGRATED END PANELS SEE PAGE 281		

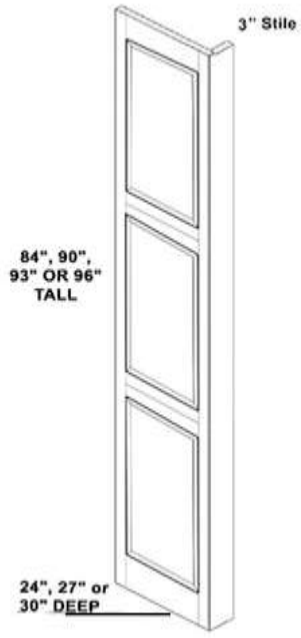

INSIDE PANEL IS FINISHED

REFRIGERATOR END - 3" STILE	**REPU1284-3*_**	1/2" REP - 12"W X 84"T	555	EA
	REPU1290-3*_	1/2" REP - 12"W X 90"T	555	EA
	REPU1293-3*_	1/2" REP - 12"W X 93-3"T	555	EA
	REPU1296-3*_	1/2" REP - 12"W X 96-3"T	555	EA
	REPU12102-3*_	1/2" REP - 12"W X 102"T	855	EA
	REPU12108-3*_	1/2" REP - 12"W X 108"T	1230	EA
	REPU2484-3*_	1/2" REP - 24"W X 84"T	750	EA
	REPU2490-3*_	1/2" REP - 24"W X 90"T	750	EA
	REPU2493-3*_	1/2" REP - 24"W X 93-3"T	750	EA
	REPU2496-3*_	1/2" REP - 24"W X 96-3"T	750	EA
	REPU24102-3*_	1/2" REP - 24"W X 102"T	1020	EA
	REPU24108-3*_	1/2" REP - 24"W X 108"T	1395	EA
	REPU2784-3*_	1/2" REP - 27"W X 84"T	900	EA
	REPU2790-3*_	1/2" REP - 27"W X 90"T	900	EA
	REPU2793-3*_	1/2" REP - 27"W X 93-3"T	900	EA
	REPU2796-3*_	1/2" REP - 27"W X 96-3"T	900	EA
	REPU27102-3*_	1/2" REP - 27"W X 102"T	1095	EA
	REPU27108-3*_	1/2" REP - 27"W X 108"T	1470	EA
	REPU3084-3*_	1/2" REP - 30"W X 84"T	960	EA
	REPU3090-3*_	1/2" REP - 30"W X 90"T	960	EA
	REPU3093-3*_	1/2" REP - 30"W X 93-3"T	960	EA
	REPU3096-3*_	1/2" REP - 30"W X 96-3"T	960	EA
	REPU30102-3*_	1/2" REP - 30"W X 102"T	1200	EA
	REPU30108-3*_	1/2" REP - 30"W X 108"T	1575	EA
	***_ INSERT L OR R**			
		N/A OVER 30" DEEP		
		SEE PAGE 365 FOR PANEL CUSTOM DEPTH AND HEIGHT STILE WIDTH N/A IN CUSTOM SIZES		

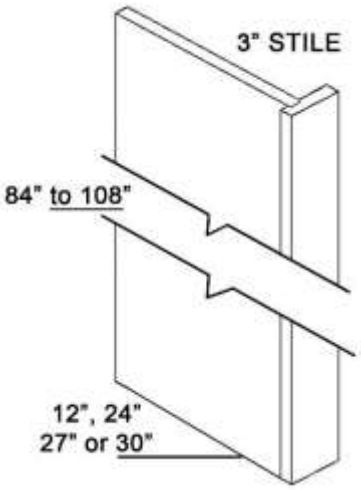

INSIDE PANEL IS FINISHED

FOR FINISHED OUTSIDE PANEL ORDER SKIN ON PAGE 279

PANELS

REFRIGERATOR END PANELS

REFRIGERATOR END
W/45 ANGLE - 3" X 3" CLIP

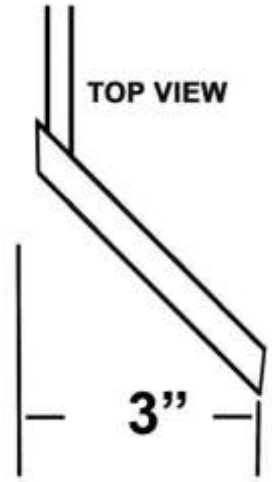

AFREPU1284-3L

INSIDE PANEL IS FINISHED

FOR FINISHED OUTSIDE PANEL ORDER SKIN ON PAGE 279

AREPU1284-3*_	3/4" AREP - 12"W X 84"T	1275	EA
AREPU1290-3*_	3/4" AREP - 12"W X 90"T	1275	EA
AREPU1293-3*_	3/4" AREP - 12"W X 93-3"T	1275	EA
AREPU1296-3*_	3/4" AREP - 12"W X 96-3"T	1275	EA
AREPU2484-3*_	3/4" AREP - 24"W X 84"T	1350	EA
AREPU2490-3*_	3/4" AREP - 24"W X 90"T	1350	EA
AREPU2493-3*_	3/4" AREP - 24"W X 93-3"T	1350	EA
AREPU2496-3*_	3/4" AREP - 24"W X 96-3"T	1350	EA
AREPU2784-3*_	3/4" AREP - 27"W X 84"T	1890	EA
AREPU2790-3*_	3/4" AREP - 27"W X 90"T	1890	EA
AREPU2793-3*_	3/4" AREP - 27"W X 93-3"T	1890	EA
AREPU2796-3*_	3/4" AREP - 27"W X 96-3"T	1890	EA
AREPU3084-3*_	3/4" AREP - 30"W X 84"T	1890	EA
AREPU3090-3*_	3/4" AREP - 30"W X 90"T	1890	EA
AREPU3093-3*_	3/4" AREP - 30"W X 93-3"T	1890	EA
AREPU3096-3*_	3/4" AREP - 30"W X 96-3"T	1890	EA
***_ INSERT L OR R**	N/A OVER 96" TALL OR 30" DEEP		
	SEE PAGE 365 FOR PANEL CUSTOM DEPTH AND HEIGHT STILE WIDTH N/A IN CUSTOM SIZES		

REFRIGERATOR END - 6" STILE

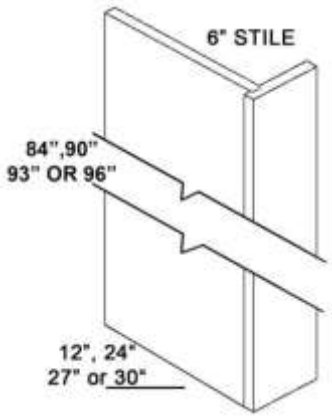

INSIDE PANEL IS FINISHED

FOR FINISHED OUTSIDE PANEL ORDER SKIN ON PAGE 279

REPU1284-6*_	1/2" REP - 12"W X 84"T	510	EA
REPU1290-6*_	1/2" REP - 12"W X 90"T	510	EA
REPU1293-6*_	1/2" REP - 12"W X 93"T	510	EA
REPU1296-6*_	1/2" REP - 12"W X 96"T	510	EA
REPU2484-6*_	1/2" REP - 24"W X 84"T	690	EA
REPU2490-6*_	1/2" REP - 24"W X 90"T	690	EA
REPU2493-6*_	1/2" REP - 24"W X 93"T	690	EA
REPU2496-6*_	1/2" REP - 24"W X 96"T	690	EA
REPU2784-6*_	1/2" REP - 27"W X 84"T	885	EA
REPU2790-6*_	1/2" REP - 27"W X 90"T	885	EA
REPU2793-6*_	1/2" REP - 27"W X 93"T	885	EA
REPU2796-6*_	1/2" REP - 27"W X 96"T	885	EA
REPU3084-6*_	1/2" REP - 30"W X 84"T	960	EA
REPU3090-6*_	1/2" REP - 30"W X 90"T	960	EA
REPU3093-6*_	1/2" REP - 30"W X 93"T	960	EA
REPU3096-6*_	1/2" REP - 30"W X 96"T	960	EA
***_ INSERT L OR R**	N/A OVER 96" TALL OR 30" DEEP		
	SEE PAGE 365 FOR PANEL CUSTOM DEPTH AND HEIGHT STILE WIDTH N/A IN CUSTOM SIZES		

REFRIGERATOR/UTILITY END PANELS

DOUBLE SIDED UTILITY END - 3"

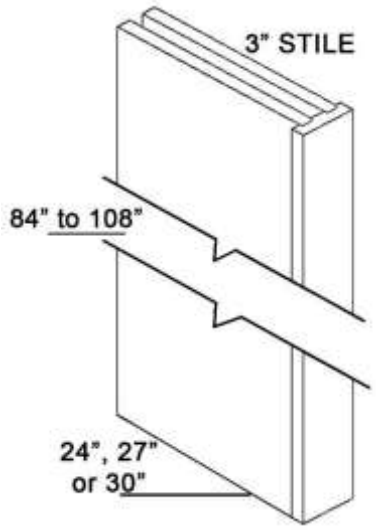

FOR FINISHED OUTSIDE PANEL ORDER SKIN ON PAGE 279

UEPDSU2484-3	1/2" UEPDS- 24"W X 84"T	690	EA
UEPDSU2490-3	1/2" UEPDS- 24"W X 90"T	690	EA
UEPDSU2493-3	1/2" UEPDS- 24"W X 93"T	690	EA
UEPDSU2496-3	1/2" UEPDS- 24"W X 96"T	690	EA
UEPDSU24102-3	1/2" UEPDS- 24"W X 102"T	1290	EA
UEPDSU24108-3	1/2" UEPDS- 24"W X 108"T	1665	EA
UEPDSU2784-3	1/2" UEPDS- 27"W X 84"T	885	EA
UEPDSU2790-3	1/2" UEPDS- 27"W X 90"T	885	EA
UEPDSU2793-3	1/2" UEPDS- 27"W X 93"T	885	EA
UEPDSU2796-3	1/2" UEPDS- 27"W X 96"T	885	EA
UEPDSU27102-3	1/2" UEPDS- 27"W X 102"T	1485	EA
UEPDSU27108-3	1/2" UEPDS- 27"W X 108"T	1860	EA
UEPDSU3084-3	1/2" UEPDS- 30"W X 84"T	990	EA
UEPDSU3090-3	1/2" UEPDS- 30"W X 90"T	990	EA
UEPDSU3093-3	1/2" UEPDS- 30"W X 93"T	990	EA
UEPDSU3096-3	1/2" UEPDS- 30"W X 96"T	990	EA
UEPDSU30102-3	1/2" UEPDS- 30"W X 102"T	1590	EA
UEPDSU30108-3	1/2" UEPDS- 30"W X 108"T	1965	EA

N/A OVER 30" DEPTH

SEE PAGE 365 FOR PANEL CUSTOM DEPTH AND HEIGHT
STILE WIDTH N/A IN CUSTOM SIZES

DOUBLE SIDED FINISHED UTILITY END W/45 ANGLE - 3" X 3" CLIP

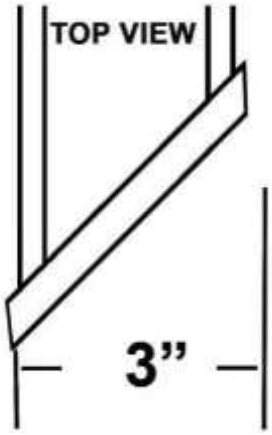

FOR FINISHED OUTSIDE PANEL ORDER SKIN ON PAGE 279

AUEPDSU2484-3*_	3/4" AUEPDS - 24"W X 84"T	1950	EA
AUEPDSU2490-3*_	3/4" AUEPDS - 24"W X 90"T	1950	EA
AUEPDSU2493-3*_	3/4" AUEPDS - 24"W X 93"T	1950	EA
AUEPDSU2496-3*_	3/4" AUEPDS - 24"W X 96"T	1950	EA
AUEPDSU2784-3*_	3/4" AUEPDS - 27"W X 84"T	2550	EA
AUEPDSU2790-3*_	3/4" AUEPDS - 27"W X 90"T	2550	EA
AUEPDSU2793-3*_	3/4" AUEPDS - 27"W X 93"T	2550	EA
AUEPDSU2796-3*_	3/4" AUEPDS - 27"W X 96"T	2550	EA

***_ INSERT L OR R**

N/A OVER 96" TALL OR 30" DEEP

SEE PAGE 365 FOR PANEL CUSTOM DEPTH AND HEIGHT
STILE WIDTH N/A IN CUSTOM SIZES

PANELS

UTILITY END PANELS

DOUBLE SIDED UTILITY END - 6"

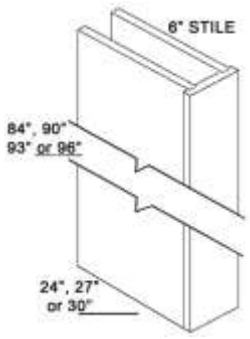

FOR FINISHED OUTSIDE PANEL ORDER SKIN ON PAGE 279

UEPDSU2484-6	1/2" UEPDS - 24"W X 84"T	750	EA
UEPDSU2490-6	1/2" UEPDS - 24"W X 90"T	750	EA
UEPDSU2493-6	1/2" UEPDS - 24"W X 93"T	750	EA
UEPDSU2496-6	1/2" UEPDS - 24"W X 96"T	750	EA
UEPDSU2784-6	1/2" UEPDS - 27"W X 84"T	930	EA
UEPDSU2790-6	1/2" UEPDS - 27"W X 90"T	930	EA
UEPDSU2793-6	1/2" UEPDS - 27"W X 93"T	930	EA
UEPDSU2796-6	1/2" UEPDS - 27"W X 96"T	930	EA
UEPDSU3084-6	1/2" UEPDS - 30"W X 84"T	1065	EA
UEPDSU3090-6	1/2" UEPDS - 30"W X 90"T	1065	EA
UEPDSU3093-6	1/2" UEPDS - 30"W X 93"T	1065	EA
UEPDSU3096-6	1/2" UEPDS - 30"W X 96"T	1065	EA
	N/A OVER 96" TALL OR 30" DEEP		
	SEE PAGE 365 FOR PANEL CUSTOM DEPTH AND HEIGHT		
	STILE WIDTH N/A IN CUSTOM SIZES		

NOTES OR ADDITIONS

CABINET ORGANIZERS

WALL STORAGE

WALL SPICE RACK



4SR-15	426	EA
10 1/2"W X 3 1/8"D X 21 1/4"T		
4SR-18	492	EA
13 1/2"W X 3 1/8"D X 21 1/4"T		
4SR-21	534	EA
16 1/2"W X 3 1/8"D X 21 1/4"T		
HEIGHT BETWEEN SHELVES IS 8 5/8"		
DESIGNED FOR 15", 18", AND 21" WIDE WALL CABINETS		

WALL PULL-OUT W/CHROME RAILS



FOR W930 THRU W948		
448-BBSCWC-5C	1050	EA
5"W X 10 3/4"D X 26 3/16"T		
FOR W1230 THRU W1248		
448-BBSCWC-8C	1236	EA
8"W X 10 3/4"D X 26 3/16"T		
ADJUSTABLE DOOR MOUNT BRACKETS		
FULL-EXTENSION BALL BEARING 100 LB RATED WITH SOFT CLOSE SLIDES		
THREE ADJUSTABLE SHELVES		
CONTAINS ONE PULL-OUT SHELVING SYSTEM, CHROME RAILS		

VERTICAL SPICE RACK



GLASS SPICE BOTTLES NOT INCLUDED

5WU2-3N1-1	330	EA
3" TWO-TIER NARROW WIRE WALL UPRIGHT PULLOUT		
3 1/32"W X 10 19/32"D X 10 1/2"T		
5WU1-5W1-1	375	EA
5" SINGLE-TIER WIDE WIRE WALL UPRIGHT PULLOUT		
4 13/32"W X 10 19/32"D X 3 9/16"T		
5WU2-5W1-1	420	EA
5" TWO-TIER WIDE WIRE WALL UPRIGHT PULLOUT		
4 13/32"W X 10 19/32"D X 10 1/2"T		
5WU2-9W2-1	750	EA
9" TWO-TIER DOUBLE WIDE WIRE WALL UPRIGHT PULLOUT		
8 19/32"W X 10 19/32"D X 10 1/2"T		
5WU2-9N3-1	780	EA
9" TWO-TIER TRIPLE NARROW WIRE WALL UPRIGHT PULLOUT		
8 19/32"W X 10 19/32"D X 10 1/2"T		

WALL FILLER PULL-OUT





WCF330PF	1260	EA
3"W X 11"D X 30"T WITH TWO ADJUSTABLE SHELVES		
WCF630PF	1440	EA
6"W X 11"D X 30"T WITH TWO ADJUSTABLE SHELVES		
WCF636PF	1500	EA
6"W X 11"D X 36"T WITH THREE ADJUSTABLE SHELVES		
ORGANIZER ONLY, FILLER NOT INCLUDED		
FULL-EXTENSION SLIDES ENSURE SMOOTH AND EASY OPENING		

ORGANIZERS ARE INSTALLED, ADD THESE LIST PRICES TO THE PRICE OF YOUR CABINET

CABINET ORGANIZERS

WALL STORAGE

WALL WOOD TRAY



TDK-W22	390	EA
22 3/4" TALL WOOD TRAY DIVIDER		
TDK-W28	435	EA
28 3/4" TALL WOOD TRAY DIVIDER		
PICTURE SHOWN WITH TWO DIVIDERS		
TRAY DIVIDER IS ONLY AVAILABLE INSTALLED		
TRAY DIVIDERS WILL BE NATURAL MAPLE, THEY WILL NOT BE FINISHED TO MATCH FINISHED INTERIOR.		

ORGANIZERS ARE INSTALLED, ADD THESE LIST PRICES TO THE PRICE OF YOUR CABINET

BASE STORAGE

BASE CLEANING ORGANIZER PULL OUT MADE IN THE USA 	DESIGNED FOR THE B12FHD		
	CASCO80-N	2370	EA
	7 3/4"W X 21"D X 25 1/2"T		
	INCLUDES ONE 1 1/4 QT STAINLESS STEEL CANISTER AND ONE PLASTIC CLEANING CADDY		
	BLUM 100# TANDEM SLIDES		
	REQUIRES AN 8 1/2" OPENING		
BASE PULL-OUT W/TRAY DIVIDER 	DESIGNED FOR THE B9		
	447-BCSC-5C	1560	EA
	5"W X 21 21/32"D X 19 1/2"T		
	DESIGNED FOR A B12		
	447-BCSC-8C	1980	EA
	8"W X 21 21/32"D X 19 1/2"T		
	FULL-EXTENSION BALL BEARING 100 LB RATED WITH SOFT CLOSE SLIDES		
	BASE ORGANIZER FEATURES TWO COMPARTMENS FOR STORING BAKING SHEETS AND PLATTERS. THE CENTER RACK IS REMOVALBE.		
	ADJUSTABLE DOOR MOUNT HARDWARE		
BASE FILLER SPICE PULL-OUT MADE IN THE USA 	**BCF330PF**	1470	EA
	3"W X 23"D X 30"T		
	BCF630PF	1800	EA
	6"W X 23"D X 30"T		
	ORGANIZER ONLY, FILLER NOT INCLUDED		
	ADJUSTABLE MIDDLE SHELF - FULL HEIGHT DOOR FIXED TOP AND BOTTOM SHELF		
	FULL-EXTENSION SLIDES ENSURE SMOOTH AND EASY OPENING		

ORGANIZERS ARE INSTALLED, ADD THESE LIST PRICES TO THE PRICE OF YOUR CABINET

CABINET ORGANIZERS

BASE STORAGE

BASE PULL-OUT



FOR A B9FHD		
CASBO50-N	1920	EA
5 7/8"W X 21 1/2"D X 26 3/4"T		
CASSHO50-N	300	EA
ADDITIONAL ADJ. SHELF		
FOR A B12FHD		
CASBO80-N	2340	EA
8 7/8"W X 21 1/2"D X 26 3/4"T		
CASSHO80-N	300	EA
ADDITIONAL ADJ. SHELF		
FOR A B15FHD		
CASBO110-N	2580	EA
11 7/8"W X 21 1/2"D X 26 3/4"T		
CASSHO110-N	300	EA
ADDITIONAL ADJ. SHELF		
ADJUSTABLE MIDDLE SHELF - FULL HEIGHT DOOR		
FIXED TOP AND BOTTOM SHELF		
BLUM 100# RATED		

BASE PULL-OUT W/KNIFE BLOCK AND CANISTERS



DESIGNED FOR A B12FHD		
CASCAN80-KBI-N	3510	EA
8 1/2"W X 26 3/4"H X 21 1/2"D		
DESIGNED FOR A B15FHD		
CASCAN110-KBI-N	3660	EA
11 1/2"W X 26 3/4"H X 21 1/2"D		
1 1/2 QT CANISTERS		
INCLUDES CANISTERS & I KNIFE BLOCK INSERT		
BLUM 100# RATED SOFT CLOSE SLIDES		

PRODUCE PULLOUT BASKET

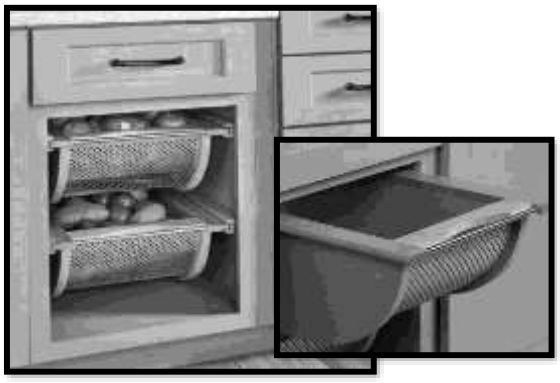

DESIGNED FOR A B15		
4SSB-15-MP	1190	EA
12"W X 9 1/2"H X 21 3/4"D		
INCLUDES ONE BASKET		
DESIGNED FOR A B18		
4SSB-18-MP	1223	EA
15"W X 21 3/4"H X 9 1/2"D		
INCLUDES ONE BASKET		
NATURAL MAPLE CONSTRUCTION W/ STAINLESS STEEL ACCENTS		
BASKET HOLDS 40LBS		
CABINET STILES WILL BE ADJUSTED TO 1 1/2" WHEN INSTALLED		

ORGANIZERS ARE INSTALLED, ADD THESE LIST PRICES TO THE PRICE OF YOUR CABINET

BASE STORAGE

BASE PULL-OUT W/CANNISTERS

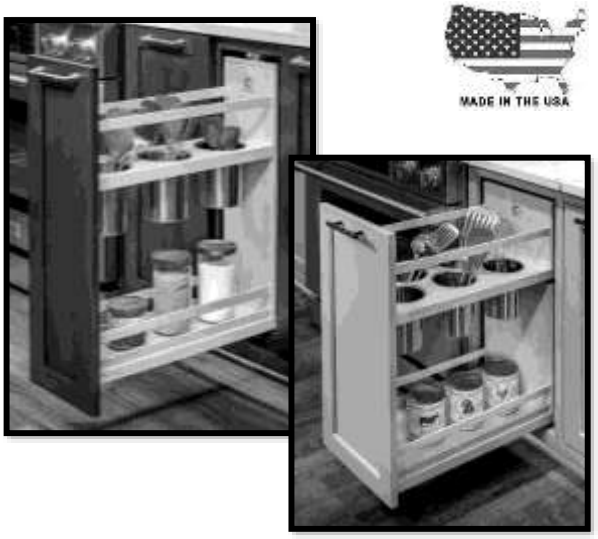

DESIGNED FOR A B9FHD		
CASCAN50-N	2400	EA
5 1/2"W X 26 3/4"H X 21 1/2"D - WITH 3 CANISTERS		
DESIGNED FOR A B12FHD		
CASCAN80-N	2700	EA
8 1/2"W X 26 3/4"H X 21 1/2"D - WITH 3 CANISTERS		
DESIGNED FOR A B15FHD		
CASCAN110-N	2850	EA
11 1/2"W X 26 3/4"H X 21 1/2"D - WITH 5 CANISTERS		
BLUM 100# RATED SOFT CLOSE SLIDES		

BASE COOKIE TRAY PULL-OUT



DESIGNED FOR B9FHD		
CASCTP50-N	2250	EA
5 3/8"W X 21 1/2"D X 20"T - SINGLE SECTION		
MINIMUM CABINET OPENING WIDTH OF 5.5"		
DESIGNED FOR B12FHD		
CASCTP80-N	2430	EA
8 3/8"W X 21 1/2"D X 20"T - DOUBLE SECTION		
MINIMUM CABINET OPENING WIDTH OF 8.5"		
DESIGNED FOR B15FHD		
CASCTP110-N	2490	EA
11 3/8"W X 21 1/2"D X 20"T - TRIPLE SECTION		
MINIMUM CABINET OPENING WIDTH OF 11.5"		
BLUM SOFT CLOSE 100# RATED		

BASE METAL TRAY DIVIDER

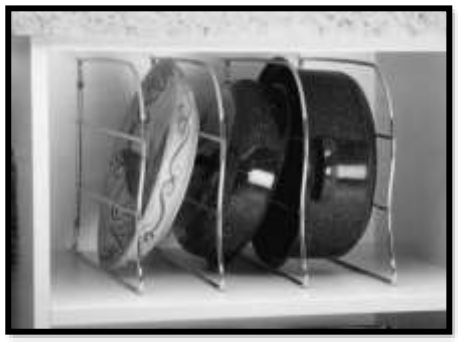

LD-597-12CR	159	EA
12" TALL X 20" DEEP		
LD-597-18CR	168	EA
18" TALL X 20" DEEP		
HEAVY DUTY CHROME		
ONE TRAY DIVIDER PER KIT		

ORGANIZERS ARE INSTALLED, ADD THESE LIST PRICES TO THE PRICE OF YOUR CABINET

CABINET ORGANIZERS

BASE STORAGE

BASE 24" TWO-TIER COOKWARE	DESIGNED FOR A B24		
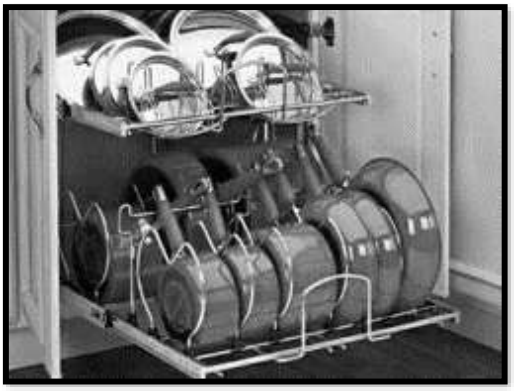	**5CW2-2122SC-CR**	1800	EA
	20 3/4"W X 22"D X 18"T		
	FULL-EXTENSION BALL BEARING 100 LB RATED WITH SOFT CLOSE SLIDES		
	ADJUSTABLE DIVIDERS		
	5WB-DMKIT	189	EA
	DOOR MOUNT KIT		
	CABINET STILES WILL BE ADJUSTED TO 1 1/2" WHEN INSTALLED		
BASE 15" TWO-TIER COOKWARE	DESIGNED FOR A B15		
	**5CW2-1222SC-CR**	1290	EA
	11 3/4"W X 22"D X 18"T		
	FULL-EXTENSION BALL BEARING 100 LB RATED WITH SOFT CLOSE SLIDES		
	ADJUSTABLE DIVIDERS		
	CABINET STILES WILL BE ADJUSTED TO 1 1/2" WHEN INSTALLED		
	5WB-DMKIT	189	EA
	DOOR MOUNT KIT		
BASE FOOD CONTAINER STORAGE	DESIGNED FOR B18		
	**4FSCO-18SC-1**	2460	EA
	14 1/2"W X 22 1/4"D X 18 7/8"T		
	DESIGNED FOR B24		
	4FSCO-24SC-1	2625	EA
	20 1/2"W X 22 1/4"D X 18 7/8"T		
	CABINET STILES WILL BE ADJUSTED TO 1 1/2" WHEN INSTALLED		
	REQUIRES 1 1/2" STILES		
	ADJUSTABLE CLIP-ON LID DIVIDERS		
	FULL EXTENSION WITH BLUMOTION SOFT CLOSE MOVENTO 110# RATED SLIDES		
	CHROME U PEGS		

ORGANIZERS ARE INSTALLED, ADD THESE LIST PRICES TO THE PRICE OF YOUR CABINET

BASE STORAGE

BASE BLIND CORNER THE CLOUD	DESIGNED FOR A B42BCFHD		
	**5372-15-MP-L**	3540	EA
	BLIND SIDE WILL BE ON RIGHT		
	5372-15-MP-R	3540	EA
	BLIND SIDE WILL BE ON LEFT		
	33"W X 21 7/8"D X 24 1/2"T		
	DESIGNED FOR A B45BCFHD		
	5372-18-MP-L	3780	EA
	BLIND SIDE WILL BE ON RIGHT		
	5372-18-MP-R	3780	EA
	BLIND SIDE WILL BE ON LEFT		
	37 19/32"W X 21 9/16"D X 24 1/2"T		
	DESIGNED FOR A B48BCFHD		
	5372-21-MP-L	4800	EA
	BLIND SIDE WILL BE ON RIGHT		
	5372-21-MP-R	4800	EA
	BLIND SIDE WILL BE ON LEFT		
	39"W X 21 3/4"D X 24 1/2"T		
	CABINET STILES WILL BE ADJUSTED TO 1 1/2" WHEN INSTALLED		
	FULL EXTENSION SOFT CLOSE - 45 LB. CAPACITY PER SHELF		
	REQUIRES CABINET TO HAVE A FULL HEIGHT DOOR		
	MOUNTS TO CABINET FLOOR AND SIDE WALLS		
	TWO NATURAL MAPLE TRAYS W/CHROME ROUND WIRE ACCENTS		
BASE BLIND CORNER WIRE BOTTOM TWO-TIER OPTIMIZER	DESIGNED FOR B42BCFHD		
	**5707-15CR**	5040	EA
	DESIGNED FOR B45BCFHD		
	5707-18CR	5160	EA
	CABINET STILES WILL BE ADJUSTED TO 1 1/2" WHEN INSTALLED		
	100 LB RATED, FULL EXTENSION, SOFT CLOSE		
	REQUIRES CABINET TO HAVE A FULL HEIGHT DOOR		
	SLIDE AND PIVOT HARDWARE AND FASTENERS, TWO LARGE BASKETS AND TWO SMALL BASKETS.		
	HARDWARE IS DOOR MOUNT DESIGNED AND CAN BE ADAPTED TO THE LEFT OR THE RIGHT HAND DOOR APPLICATION		
	RECOMMEND NOT TO EXCEED 15 LB (PER FRONT SHELF) AND 20 LB (PER BACK SHELF)		
BASE BLIND CORNER SOLID BOTTOM TWO-TIER OPTIMIZER	DESIGNED FOR B45BCFHD		
	**599-18-LMP**	5985	EA
	599-18-RMP	5985	EA
	CABINET STILES WILL BE ADJUSTED TO 1 1/2" WHEN INSTALLED		
	75 LB RATED, FULL EXTENSION, SOFT CLOSE		
	REQUIRES CABINET TO HAVE A FULL HEIGHT DOOR		
	HARDWARE IS DOOR MOUNT DESIGNED AND CAN BE ADAPTED TO THE LEFT OR THE RIGHT HAND DOOR APPLICATION		
	RECOMMEND NOT TO EXCEED 20 LB PER SHELF		

ORGANIZERS ARE INSTALLED, ADD THESE LIST PRICES TO THE PRICE OF YOUR CABINET

CABINET ORGANIZERS

BASE STORAGE

BASE EASY ACESS CORNER PANTRY

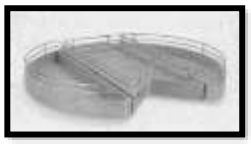

T8730K50MNL5



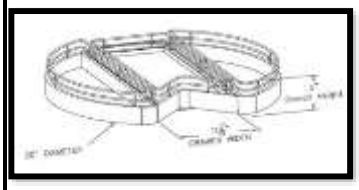

T8730K51MNL5

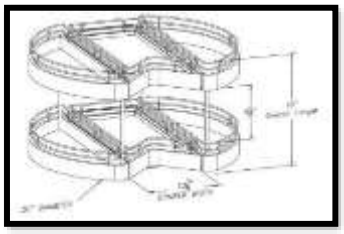

FOR A BER 36"		
T8730K50MNL5	2400	EA
SINGLE SHELF UNIT WITH 1 FULL EXTENSION DRAWERS		
T8730K51MNL5	4200	EA
DOUBLE SHELF UNIT WITH 2 FULL EXTENSION DRAWERS		
BLUM FULL EXTENSION GUIDE		
4 1/2" RIM HEIGHT PREVENTS ITEMS FROM FALLING OUT		
30" DIAMETER WITH 25" DEEP DRAWERS		
ROTATES 360 DEGREES AND HAS A 90 LB WEIGHT RATING		

BASE MIXER LIFT



FOR B18FHD, B21FHD & B24FHD		
RAS-ML-HDSC	1800	EA
SOFT CLOSE		
NO DEPTH MODIFICATIONS		
CABINET MUST HAVE A FULL HEIGHT DOOR.		
3/4 FINISHED SHELF ATTACHED TO LIFTING ARMS.		
HOLDS APPLIANCE UP TO 60 LBS		
MAX ROLLOUT BELOW MIXER LIFT IS 3 1/2"		

BASE UNDER SINK CHROME BASKET



FOR A BS36-42 & 45		
544-12KD-1	840	EA
11 7/8"W X 15 29/32"D X 18 15/32"T		
MULTIPLE CLEANING ITEMS IN ONE PLACE AND CARRY THEM WITH YOU WITH THE REMOVABLE CADDY. THE UNIQUE HANDLE ADJUSTS TO ACCOMMODATE PLUMBING FIXTURES AND THE REVERSIBLE TOP TRAY IS IDEAL FOR PAPER TOWELS.		
THIS ITEM SCREWS INTO THE CABINET BASE FLOOR DO NOT USE WITH DRIP TRAY		

ORGANIZERS ARE INSTALLED, ADD THESE LIST PRICES TO THE PRICE OF YOUR CABINET

BASE STORAGE

BASE 3 PRONG TOWEL BAR



563-47L	360	EA
WHITE - 5"W X 17 3/4"D X 1 1/4"H		
563-47R	360	EA
WHITE - 5"W X 17 3/4"D X 1 1/4"H		
563-47CL	360	EA
CHROME - 5"W X 17 3/4"D X 1 1/4"H		
563-47CR	360	EA
CHROME - 5"W X 17 3/4"D X 1 1/4"H		
THE PULL-OUT TOWEL BAR IS THE PERFECT EXAMPLE OF USER-FRIENDLY WITH 3 PRONGS THAT SLIDE OUT OF THE CABINET 12" FOR TOTAL CONVENIENCE.		
THIS TOWEL BAR FEATURES UNIVERSAL BRACKETS FOR LEFT OR OR RIGHT HAND MOUNTING.		
NOT AVAILABLE IN A 9" WIDE (OR LESS) CABINET		

BASE PREMIERE UNDERSINK PULLOUT



FOR A BS33-2B		
5786-30CR	1974	EA
29 1/2" - 31 3/4"W X 22"D X 5 1/4"T		
FOR A BS36-2B		
5786-33CR	2064	EA
32 1/2" - 34 3/4"W X 22"D X 5 1/4"T		
THIS ITEM SCREWS INTO THE CABINET BASE FLOOR DO NOT USE WITH DRIP TRAY		
NOT RECOMMENDED TO USE WITH A FARM SINK AS PLUMING MAY RESTRICT USE		
UNDERSINK PULLOUT OFFERS A UNIQUE U-SHAPE DESIGN CREATED SPECIFICALLY TO FIT AROUND PLUMBING UNDER THE SKIN. THIS CHROME PULLOUT FEATURES SOFT CLOSE FULL EXT SLIDES AND BOTTOM MOUNT BRACKETS		

FLEXIBLE DRIP TRAY
GRAY POLYMER



FOR A BS27-2B THRU BS30-2B		
SBDTF-2730-14	315	EA
25 1/2" TO 28 1/2"W X 21 1/2" TO 23 1/4"D X 3/4"T		
FOR A BS33-2B THRU BS36-2B		
SBDTF-3336-14	360	EA
31 1/2" TO 34 1/2"W X 21 1/2" TO 23 1/4"D X 3/4"T		
FOR A BS39-2B THRU BS42-2B		
SBDTF-3942-14	420	EA
37 1/2" TO 40 1/2"W X 21 1/2" TO 23 1/4"D X 3/4"T		
These flexible trays are perfect for installation in smaller spaces and are your first line of defense against water damage in your under sink cabinets. They are easy to clean, resistant to most household chemicals, and trimmable with scissors for easy customization.		

ORGANIZERS ARE INSTALLED, ADD THESE LIST PRICES TO THE PRICE OF YOUR CABINET

CABINET ORGANIZERS

DRAWER ORGANIZATION

MAGNABASE DEEP DRAWER ORGANIZER

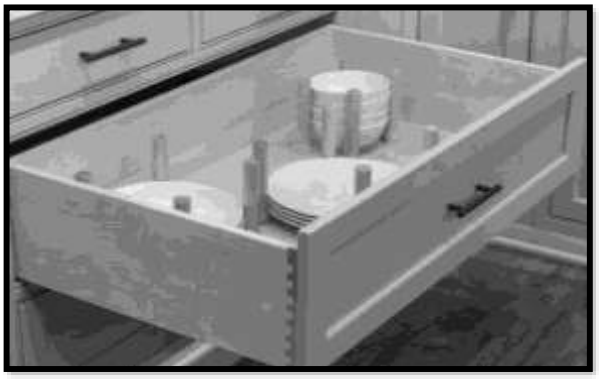

CAN BE TRIMMED:
1 1/2" ON EACH SIDE (WIDTH)
1/2" ON EACH SIDE (DEPTH)



FOR A BD24		
MAGBASE21PF	1770	EA
21"W X 19 7/8"D X 6"T / COMES WITH 8 MAPLE PEGS		
FOR A BD27		
MAGBASE24PF	2031	EA
24"W X 19 7/8"D X 6"T / COMES WITH 8 MAPLE PEGS		
FOR A BD30		
MAGBASE27PF	2295	EA
27"W X 19 7/8"D X 6"T / COMES WITH 12 MAPLE PEGS		
FOR A BD33		
MAGBASE30PF	2400	EA
30"W X 19 7/8"D X 6"T / COMES WITH 12 MAPLE PEGS		
FOR A BD36		
MAGBASE33PF	2616	EA
33"W X 19 7/8"D X 6"T / COMES WITH 12 MAPLE PEGS		
FOR A BD39		
MAGBASE36PF	2880	EA
36"W X 19 7/8"D X 6"T / COMES WITH 16 MAPLE PEGS		
MAGPEG-SM4	579	EA
ADDITIONAL PEGS (SET OF FOUR PEGS)		

BASE VINYL DRAWER PEG BOARD
DRAWER OPENINGS MUST BE 10 1/2" TALL OR MORE
EACH SIZE CAN BE TRIMMED TO FIT



4DPBG-2421-1	480	EA
24 1/8"W X 21 1/4"D X 5/8"T		
FITS B27 AND SMALLER CABINETS		
4DPBG-3021-1	603	EA
30 1/8"W X 21 1/4"D X 5/8"T		
FITS B30 & B33 CABINETS		
4DPBG-3921-1	780	EA
39 1/8"W X 21 1/4"D X 5/8"T		
FITS B36 AND B39 CABINETS		

BASE PEG BOARD ACCESSORIES
DRAWER OPENINGS MUST BE 10 1/2" TALL OR MORE

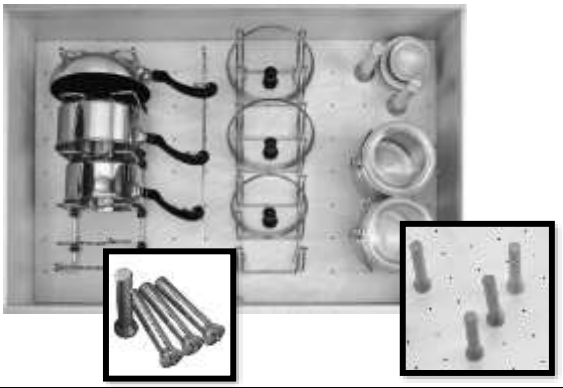

POT & PAN ORGANIZER		
5DCD-1-CR	192	EA
7 1/4"W X 15 1/4"D X 7 5/8"T		
LID ORGANIZER		
5DLD-1-CR	150	EA
5 1/4"W X 16 7/8"D X 5 3/8"T		
STAINLESS STEEL CANISTER SET		
5DCH-2-1CR	300	EA
6 1/2"W X 10 1/4"D X 6 1/2"T CONTAINS 2 CANISTERS		
STAINLESS STEEL PEGS (SET OF FOUR PEGS)		
DPS-PEG-1SS	400	EA
WOOD PEGS (SET OF FOUR PEGS)		
4DPS-PEG-1	60	EA

DEEP DRAWER DIVIDER INSERT



FOR A B36PP, B36PPRO, B36PPDR-2B, BD36-3 OR BD36-3TDS		
4ADI-36-1	1125	EA
31 7/32"W X 19 1/2"D X 5 31/32"T		
9 ADJUSTABLE AND REMOVABLE DIVIDERS		

ORGANIZERS ARE INSTALLED, ADD THESE LIST PRICES TO THE PRICE OF YOUR CABINET

DRAWER ORGANIZATION

CHARGING DRAWER

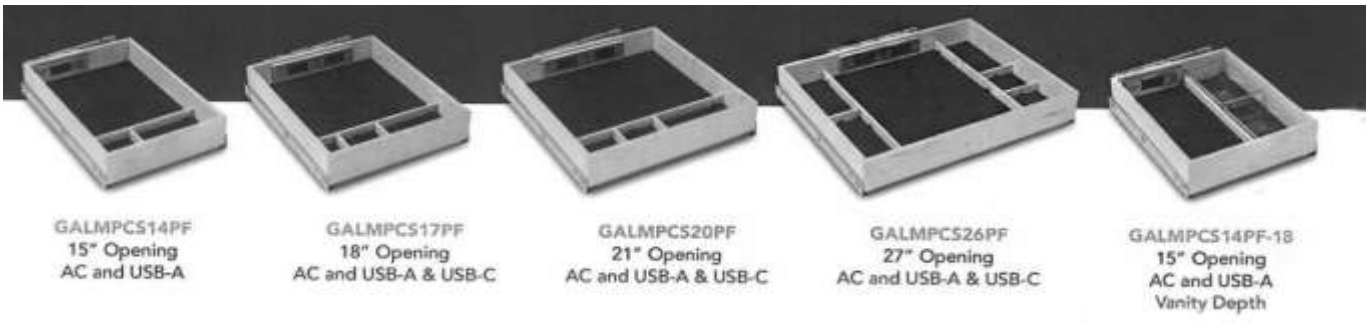

CHARGING DRAWER



FOR A B18		
GALMPCS14PF	4029	EA
15" x 21 1/2" x 4 7/16"		
FOR A B21		
GALMPCS17PF	5190	EA
18" x 21 1/2" x 4 7/16"		
FOR A B24		
GALMPCS20PF	5304	EA
21" x 21 1/2" x 4 7/16"		
FOR A B30		
GALMPCS26PF	5499	EA
27" x 21 1/2" x 4 7/16"		
FOR A VB18		
GALMPCS14PF-18	4110	EA
15" x 18 1/2" x 4 7/16"		
NO DEPTH OR WIDTH MODIFICATIONS AVAILABLE		
ETL listed 15 amp Docking Drawer® Outlet to meet UL962a standards.		
Solid Maple dovetailed drawer box and dividers.		
Sequoia Italion Leather Bottom		
AC, USB-A, and/or USB-C connections.		
Access holes in Maple dividers to guide charging cords through.		
Blum™ Tandem undermount slides.		

DRAWER CHARGING UNIT



CHARGING UNIT FOR A B12 THRU B24		
DRAWERDOCK-24	1615	EA
CHARGING UNIT FOR A B27 THRU B39	1705	EA
DRAWERDOCK-39		
IN DRAWER RECEPTICLE WITH TWO 125V PLUGS, TWO USB PORTS AND TWO USB C'S		
INCLUDES POWER CORD WITH NEMA 5-15 PLUG		
INCLUDES ELECTRICAL PULLOUT ARM		
SHOCK ABSORBENT MAT		

ORGANIZERS ARE INSTALLED; ADD THESE LIST PRICES TO THE PRICE OF YOUR CABINET

CABINET ORGANIZERS

DRAWER ORGANIZATION

WOOD DRYING RACK 	FOR A B24		
	4WDR-24H	1680	EA
	21 17/32"W X 20 31/32"D X 3 7/8"H		
	RUST RESISTANT STAINLESS STEEL RODS.		
	18 LINEAR FEET OF DRYING SPACE.		
	REQUIRES 42" OF SPACE WHEN OPENED.		
	FOLDS AWAY WHEN NOT IN USE.		
	STILES WILL BE ADJUSTED TO 1 1/2" WHEN INSTALLED		
	FOR A B30		
	4WDR-30H	2100	EA
	26 17/32"W X 20 31/32"D X 3 7/8"H		
	RUST RESISTANT STAINLESS STEEL RODS.		
	21 LINEAR FEET OF DRYING SPACE.		
	REQUIRES 48" OF SPACE WHEN OPENED.		
	FOLDS AWAY WHEN NOT IN USE.		
	STILES WILL BE ADJUSTED TO 1 1/2" WHEN INSTALLED		
SINK FRONT TIP OUT TRAY 	**6572-11-TOTK**	255	EA
	11"W X 2 1/8"D X 3 3/16"H		
	*MINIMUM FRAME OPENING IS 13 1/4"		
	6572-14-TOTK	255	EA
	14"W X 2 1/8"D X 3 3/16"H		
	*MINIMUM FRAME OPENING IS 16 1/4"		
	REV-A-SHELF'S MOST POPULAR SINK FRONT TIP-OUT TRAY SET		
	THE 6572 SERIES INCLUDES TWO TRAYS: ONE CONVENTIONAL OPEN TRAY AND ONE ACCESSORY TRAY WITH RING HOLDER AND SOAP DISH. INCLUDES 2 PAIRS OF SELF-HOLDING HINGES.		
	THE 6572 SERIES IS MADE OF HIGH POLYSTYRENE AND IS AVAILABLE IN 11" AND 14" SIZES IN WHITE.		
STAINLESS STEEL TIP OUT TRAY 	**6541-10-5-TOTK**	270	EA
	10"W X 1 11/16"D X 3"H		
	*MINIMUM FRAME OPENING IS 12 1/4"		
	6541-13-5-TOTK	300	EA
	13"W X 1 11/16"D X 3"H		
	*MINIMUM FRAME OPENING IS 15 1/4"		
	6541-25-5-TOTK	360	EA
	25"W X 1 11/16"D X 3"H		
	*MINIMUM FRAME OPENING IS 27 1/4"		
	6541-28-5-TOTK	375	EA
	28"W X 1 11/16"D X 3"H		
	*MINIMUM FRAME OPENING IS 30 1/4"		
	6541-31-5-TOTK	390	EA
	31"W X 1 11/16"D X 3"H		
	*MINIMUM FRAME OPENING IS 33 1/4"		

ORGANIZERS ARE INSTALLED, ADD THESE LIST PRICES TO THE PRICE OF YOUR CABINET

CABINET ORGANIZERS

DRAWER ORGANIZATION

WOOD SPICE INSERT	AVAILABLE IN B15, B18, B21, AND B24		
	**4SDI-18**	600	EA
	16"W X 1 1/2"T X 19 3/4"D		
	4SDI-24		
	22"W X 1 1/2"T X 19 3/4"D	690	EA
	BIRCH/MAPLE		
	WOOD SPICE DRAWER INSERT		
	DRAWER OPENING HEIGHT MUST BE A MINIMUM OF 4 3/4" TALL		
	HEIGHT OF SPICE CONTAINER CAN ONLY BE 3" OR LESS		
	TOP RAIL WILL BE ADJUSTED TO 1 1/2" WHEN INSTALLED		
BREADBOX COVER	FITS A B18 AND A B21		
	**BDC-200-11**	300	EA
	FITS A B24		
	BDC24-11	300	EA
	BREAD DRAWER COVER KITS INCLUDE: (1) ONE-PIECE COVER WITH MOLDED IN HANDLE AND REAR STOP, (1) PAIR ADJUSTABLE SLIDING RAILS, & MOUNTING SCREWS.		
	COVER IS TEXTURED TO HIDE SCRATCHES.		
	AVAILABLE IN WHITE		
SHALLOW DRAWER DIVIDER INSERT	**4WDIV-24SH-1**	675	EA
	19 1/4"W X 19 13/16"D X 2 3/8"T		
	COMES WITH 3 STANDARD DIVIDERS, 2 NOTCHED DIVIDERS AND 3 CROSS DIVIDERS		
	4WDIV-30SH-1	750	EA
	25 1/4"W X 19 13/16"D X 2 3/8"T		
	COMES WITH 3 STANDARD DIVIDERS, 2 NOTCHED DIVIDERS AND 3 CROSS DIVIDERS		
	4WDIV-36SH-1	900	EA
	31 7/32"W X 19 13/16"D X 2 3/8"T		
	COMES WITH 5 STANDARD DIVIDERS, 2 NOTCHED DIVIDERS AND 3 CROSS DIVIDERS		
	MAPLE		

ORGANIZERS ARE INSTALLED, ADD THESE LIST PRICES TO THE PRICE OF YOUR CABINET

CABINET ORGANIZERS

DRAWER ORGANIZATION

TWO TIER SILVERWARE DRAWER



DTIER14PF



DTIER11PF



DTIER17PF

DESIGNED FOR B15		
DTIER11PF	1800	EA
11 7/8"W X 21"D X 4"T		
(OPENING WIDTH MUST BE 12")		
DESIGNED FOR B18		
DTIER14PF	2010	EA
14 7/8"W X 21"D X 4"T		
(OPENING WIDTH MUST BE 15")		
DESIGNED FOR B21		
DTIER17PF	2100	EA
17 7/8"W X 21"D X 4"T		
(OPENING WIDTH MUST BE 18")		
BLUM SOFT CLOSE 100# RATED		
STILES WILL BE ADJUSTED TO 1 1/2" WHEN INSTALLED		
TOP RAIL WILL BE ADJUSTED TO 1 1/2" WHEN INSTALLED		
THESE SILVERWARE DRAWERS WILL NOT FIT IN CABINETS WITH 1 3/4" FACE FRAMES. THEY WILL ONLY FIT IN CABINETS WITH 1 1/2" STILES & RAILS.		

SILVERWARE TRAY INSERT



TTKF14PF



TTKF20PF



TTKF26PF

DESIGNED FOR B18		
TTKF14PF	780	EA
13 7/8"W X 22"D X 2 3/8"T		
DESIGNED FOR B24		
TTKF20PF	825	EA
20"W X 22"D X 2 3/8"T		
DESIGNED FOR B30		
TTKF26PF	936	EA
26 3/4"W X 22"D X 2 3/8"T		
TRIMMABLE		
CAN COMBINE WITH CENTURY KNIFE BLOCKS FOR MORE DRAWER ORGANIZATION		
EACH COMPARTMENT 3" OR WIDER		

ORGANIZERS ARE INSTALLED, ADD THESE LIST PRICES TO THE PRICE OF YOUR CABINET

DRAWER ORGANIZATION

WOOD SILVERWARE DIVIDER



WSD-B15	255	EA
WSD-B18	255	EA
WSD-B21	255	EA
WSD-B24	255	EA
WSD-B27	300	EA
WSD-B30	300	EA
WSD-B33	360	EA
WSD-B36	360	EA
WSD-B39	360	EA

SILVERWARE DIVIDER MADE BY KOCH
BUILT OUT OF SAME MATERIAL AS DRAWER

UTENSIL TRAY INSERT





TTUT18PF



TTUT26PF

DESIGNED FOR B21
TTUT18PF 675 EA
18"W X 22"D X 2 3/8"T - 3 DIVIDERS

18PF IS TRIMMABLE UP T0 4.5" PER SIDE

DESIGNED FOR B30
TTUT26PF 900 EA
26 3/4"W X 22"D X 2 3/8"T - 5 DIVIDERS

26PF IS TRIMMABLE UP T0 5" PER SIDE

CAN COMBINE WITH CENTURY KNIFE BLOCKS
FOR MORE DRAWER ORGANIZATION

EACH COMPARTMENT 3 1/2" OR WIDER

ORGANIZERS ARE INSTALLED, ADD THESE LIST PRICES TO THE PRICE OF YOUR CABINET

CABINET ORGANIZERS

DRAWER ORGANIZATION

KNIFE CENTER (4KCB)	FOR A B18		
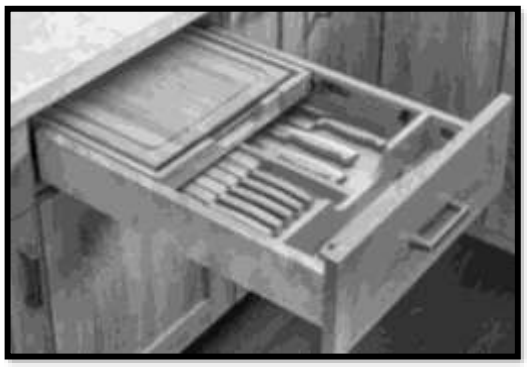	**4KCB-18HSC-1**	1620	EA
	15"W X 21 3/4" TO 23 3/4"D X 4 13/32"T		
	FOR A B21		
	4KCB-21HSC-1	1707	EA
	18"W X 21 3/4" TO 23 3/4"D X 4 13/32"T		
	FOR A B24		
	4KCB-24HSC-1	1827	EA
	21"W X 21 3/4" TO 23 3/4"D X 4 13/32"T		
	COMBINATION KNIFE HOLDER/CUTTING BOARD SYSTEM.		
	FULL EXTENSION SOFT CLOSE UNDER MOUNT DRAWER GUIDES.		
	CABINET STILES WILL BE ADJUSTED TO 1 1/2" WHEN INSTALLED		
STANDARD KNIFE BLOCK	**KB6PF**	660	EA
MADE IN THE USA	6 1/2"W X 22"D X 2 3/8"T (HOLDS UP TO 5 KNIVES)		
	KB12PF	870	EA
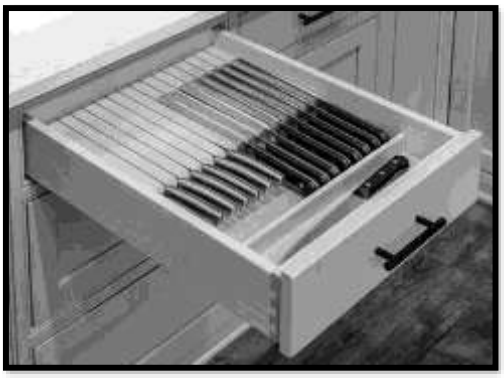	12 1/4"W X 22"D X 2 3/8"T (HOLDS UP TO 11 KNIVES)		
	TRIMMABLE ON BOTH LENGTH AND WIDTH		
	CAN COMBINE WITH CENTURY SILVERWARE OR UTENSIL TRAY INSERT FOR MORE DRAWER ORGANIZATIONS		
THE WAVE KNIFE BLOCK	**WKB55PF**	915	EA
MADE IN THE USA	5 7/8"W X 16 7/8"D X 2 1/8"T HOLDS UP TO 9 KNIVES		
	**WKB90PF**	1200	EA
WKB55PF	9 3/8"W X 16 7/8"D X 2 1/8"T HOLDS UP TO 15 KNIVES		
	CAN COMBINE WITH CENTURY SILVERWARE OR UTENSIL TRAY INSERT FOR MORE DRAWER ORGANIZATIONS		
			
COMBINATION OF THE WAVE AND A SILVERWARE TRAY			

ORGANIZERS ARE INSTALLED, ADD THESE LIST PRICES TO THE PRICE OF YOUR CABINET

VANITY ORGANIZATION

VANITY GROOMING ORGANIZER WITH OUTLET  	DESIGNED FOR VB12FHDAH **SIGGO-EL85PF-18** 8 7/8"W X 18 1/2"D X 26 3/4"T - VANITY GROOMING ORGANIZER INCLUDES 3 POLY TRAYS & NON SLIP MAT ON BOTTOM SHELF INCLUDES 3 ROUND STAINLESS STEEL CANISTERS INCLUDES 1 SQUARE STAINLESS STEEL CANISTER FOR CORDS BLUM TANDEM GUIDES 15 AMP UL LISTED - HAS DUEL OUTLETS HIGHEST HL LISTING. SHUTS OFF AT 120 DEGREES STILES WILL BE ADJUSTED TO 1 1/2"	5919	EA
VANITY GROOMING ORGANIZER WITHOUT OUTLET  	DESIGNED FOR VB12FHDAH **SIGGO85PF-18** 8 7/8"W X 18 1/2"D X 26 3/4"T - VANITY HEIGHT ORGANIZER INCLUDES 3 POLY TRAYS & NON SLIP MAT ON BOTTOM SHELF INCLUDES 3 ROUND STAINLESS STEEL CANISTERS INCLUDES 1 SQUARE STAINLESS STEEL CANISTER FOR CORDS BLUM TANDEM GUIDES STILES WILL BE ADJUSTED TO 1 1/2"	4020	EA
VANITY BASE ORGANIZER  	DESIGNED FOR VB12FHDAH **SIGBO85PF-18** 8 7/8"W X 18 1/2"D X 26 3/4"T - VANITY HEIGHT ORGANIZER STILES WILL BE ADJUSTED TO 1 1/2" COMES WITH 6 POLYCARBONITE BINS & NON SLIP MATS FEATURES BLUM TANDEM SLIDES	3048	EA

ORGANIZERS ARE INSTALLED, ADD THESE LIST PRICES TO THE PRICE OF YOUR CABINET

CABINET ORGANIZERS

VANITY ORGANIZATION

VANITY OUTLET DRAWER



DESIGNED FOR A VDB18AH-3		
4VOD-18SC-1	2850	EA
15"W X 20 1/2"D X 8 15/16"T		
TWO COMPARTMENTS AND TWO STAINLESS STEEL BINS		
IN DRAWER RECEPTACLE WITH 2 120V PLUGS		
TAMPER RESISTANT OUTLETS		
POWER CORD WITH NEMA 5-15 PLUG		
FULL EXTENSION 110# RATED, WITH BLUMOTION SOFT CLOSE		
CABINET STILES WILL BE ADJUSTED TO 1 1/2" WHEN INSTALLED		

VANITY L-SHAPED ORGANIZER



DESIGNED FOR A VSB24AH		
441-12VSBSC-1	1869	EA
8 3/4"W X 18 3/4"D X 18 7/8"T		
DESIGNED FOR VSB30AH		
441-15VSBSC-1	2100	EA
11 11/16"W X 18 3/4"D X 18 7/8"T		
ADJUSTABLE SHELVES & TWO STAINLESS STEEL BINS		
FEATURES BLUM SOFT CLOSE 90# RATED SLIDES		
ANTI-SKID VINYL LINING ON LOWER LEVEL		
SIX ACRYLIC BINS FOR UPPER LEVEL		
N/A IN SINK BASE CABINETS LESS THAN 34 1/2" TALL		

VANITY HAMPERS HRV SERIES

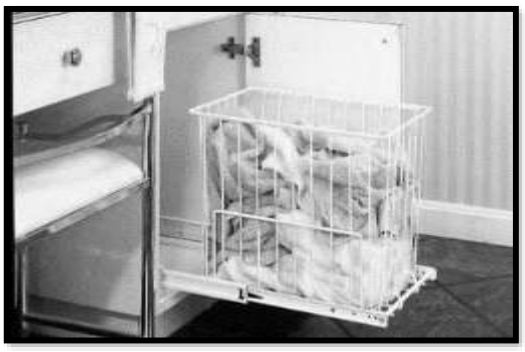

HRV1220S



HRV1220S WITH DOOR MOUNT KIT

FOR A VB15FHD OR VB15AH CABINET		
HRV-1220 S	1050	EA
11 7/8"W X 18"D X 19 3/8"T		
FOR A VB18FHD OR VB18AH CABINET		
HRV-1520 S	1050	EA
14 3/4"W X 18"D X 19 3/8"T		
FOR A VB15 CABINET		
HRV-1215 S	1050	EA
11 7/8"W X 18"D X 14 3/4"T		
FOR A VB18 CABINET		
HRV-1515 S	1050	EA
14 3/4"W X 18"D X 14 3/4"T		
RV DM KIT	159	EA
DOOR MOUNT KIT FOR HRV HAMPER SERIES		
CABINET STILES WILL BE ADJUSTED TO 1 1/2" WHEN INSTALLED		
DESIGNED FOR 21" DEEP CABINETS		
THE PULL-OUT WIRE HAMPER IS EASILY REMOVABLE FOR CARRYING TO THE LAUNDRY ROOM.		
THE HRV SERIES FEATURES BLUM FULL EXTENSION SLIDES AND EASY INSTALLATION.		

ORGANIZERS ARE INSTALLED, ADD THESE LIST PRICES TO THE PRICE OF YOUR CABINET

PANTRY ORGANIZATION

TALL PANTRY ORGANIZER





FOR A P1284U24 AND TALLER
CASPO80-55PF 4530 EA
8 3/8"W X 21 1/2"D X 59"T

FOR A P1584U24 AND TALLER
CASPO110-55PF 4800 EA
11 3/8"W X 21 1/2"D X 59"T

FOR A P1884U24 AND TALLER
CASPO140-55PF 5025 EA
14 3/8"W X 21 1/2"D X 59"T

SOFT CLOSE

OFFICE ORGANIZATION

TWO-TIER FILE DRAWER SYSTEM



FOR A VB18FHD
RAS-FD-KIT 900 EA
14 3/4"W X 19 3/4" - 24"D X 22 5/8"T

FULL-EXTENSION BALL BEARING SLIDES & HEAVY DUTY CHROME PLATED RAILS.

NOT INSTALLED

HOLDS BOTH LETTER AND LEGAL SIZE FOLDERS

FILE HARDWARE-RAS-FD-SERIES



SMALL FILE SYSTEM
RAS-SMFD-52 150 EA
13"W X 19 1/4"D X 9 3/4"T

LARGE FILE SYSTEM
RAS-LGFD-52 180 EA
15 7/8"W X 19 1/4"D X 9 3/4"T

RAS-FD ORGANIZER FEATURES FRONT AND BACK FRAMES THAT FASTEN TO THE DRAWER BOX FOR COMPLETE STABILITY AND VERSATILE T-ROD CREATES DIVIDED STORAGE FOR BOTH LEGAL AND LETTER SIZE FOLDERS
DESIGNED FOR 18" AND 21" CABINETS

NOT INSTALLED

CABINET ORGANIZERS

TRASH SOLUTIONS

CUT OUT CUTTING BOARD





CBP-14-50PF SHOWN

DESIGNED FOR A B18		
CBP-14-34PF	2430	EA
15"W X 21 1/2" D X 3 3/16"T		
DESIGNED FOR A B18FHD		
CBP-14-50PF	2400	EA
15"W X 21 1/2" D X 2 15/16"T		
TRASH UNIT IS NOT INCLUDED		
BLUMOTION SELF LOCK FOR A SECURE WORK SURFACE		
BLUM TANDEM 563H SLIDES		
REQUIRES 1 1/2" STILES - NEEDS A 15" OPENING		
NATURAL MAPLE CUTTING BOARD		
REMOVABLE CUT OUT CUTTING BOARD 3" X 5 1/2" DISPOSAL HOLE		
NO WIDTH OR DEPTH MODIFICATIONS		

REV-A-SHELF WASTEBASKET LID



RV-35-LID-1	111	EA
35 QT WHITE LID		
RV-35-LID-17-1	111	EA
35 QT SILVER LID		
FOR REV-A-SHELF CONTAINERS		

ORGANIZERS ARE INSTALLED, ADD THESE LIST PRICES TO THE PRICE OF YOUR CABINET

TRASH SOLUTIONS

BOTTOM MOUNT WASTE ROLLOUT







CASBM200-34PF-GR W/3 BINS & EDGBM110-34PF-GR W/1 BIN

FOR A B15		
EDGBM110-34PF-GR	1875	EA
11 3/8"W X 21 1/2"D X 19 5/8"T - WITH 1 34 QT BIN & 1 STEEL BIN		
FOR A B18		
EDGBM140-34PF-GR	1962	EA
14 3/8"W X 21 1/2"D X 19 5/8"T - WITH 2 34 QT BINS		
FOR A B21		
EDGBM170-34PF-GR	2052	EA
17 3/8"W X 21 1/2"D X 19 5/8"T - WITH 2 34 QT BINS		
FOR A B24		
CASBM200-34PF-GR	2325	EA
20 3/8"W X 21 1/2"D X 19 5/8"T - WITH 2 34 QT BINS, AND 3		
1 1/2 QT CANNISTERS. ONLY ONE CANNISTER INCLUDES A LID.		
INCLUDES DRAWER FLOOR		
LIDS NOT INCLUDED FOR BINS - SEE BELOW		
NO SIZE MODIFICATIONS		
BLUM 170# MOVENTO SOFT CLOSE UNDERMOUNT SLIDES WITH LEFT/RIGHT AND UP/DOWN ADJUSTABILITY		

BOTTOM MOUNT WASTE ROLLOUT FOR FULL HEIGHT DOOR



EDGBM110-50PF-GR WILL HAVE ONE STEEL BIN

FOR A B15FHD		
EDGBM110-50PF-GR	2160	EA
11 3/8"W X 21 1/2"D X 23 5/8"T - WITH 1 50 QT BIN & 1 STEEL BIN		
FOR A B18FHD		
EDGBM140-50PF-GR	2385	EA
14 3/8"W X 22 1/2"D X 23 5/8"T - WITH 2 50 QT BINS		
FOR A B21FHD		
EDGBM170-50PF-GR	2550	EA
17 3/8"W X 22 1/2"D X 23 5/8"T - WITH 2 50 QT BINS		
LIDS NOT INCLUDED FOR BINS - SEE BELOW		
LIDS AVAILABLE FOR 50 QT BINS - SEE BELOW		
NO SIZE MODIFICATIONS		
BLUM 170# MOVENTO SOFT CLOSE UNDERMOUNT SLIDES WITH LEFT/RIGHT AND UP/DOWN ADJUSTABILITY		

WASTEBASKET LID



34BLD-GR	123	EA
34 QT GREY LID		
50BLD-GR	138	EA
50 QT GREY LID		

ORGANIZERS ARE INSTALLED, ADD THESE LIST PRICES TO THE PRICE OF YOUR CABINET

NOTES OR ADDITIONS

BUNN FEET

A0545-DS4 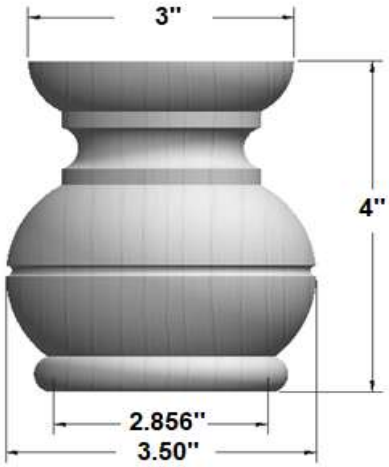	**A0545-DS4** BUNN FOOT 4"T X 3 1/2"W **PREP FOR FEET** Prep for feet is a blocking that flushes with the frame and cabinet side, to allow attachment of the deco foot. Will recess toe kick back 5" - Blocking is 4 1/4" X 4 1/4" **FINISHED AS PER CABINETRY** **SENT LOOSE**	294 300	EA PC
A0541-DS4 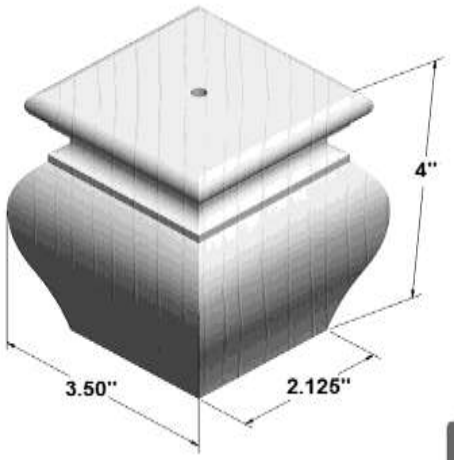	**A0541-DS4** BUNN FOOT 4"T X 3 1/2"W **PREP FOR FEET** Prep for feet is a blocking that flushes with the frame and cabinet side, to allow attachment of the deco foot. Will recess toe kick back 5" - Blocking is 4 1/4" X 4 1/4" **FINISHED AS PER CABINETRY** **SENT LOOSE**	585 300	EA PC
A0550-DS4 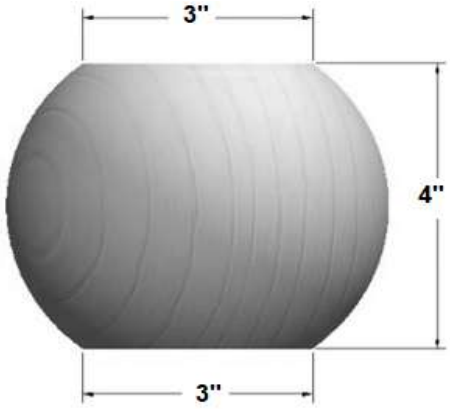	**A0550-DS4** BUNN FOOT 4"T X 5"W **PREP FOR FEET** Prep for feet is a blocking that flushes with the frame and cabinet side, to allow attachment of the deco foot. Will recess toe kick back 5" - Blocking is 4 1/4" X 4 1/4" **FINISHED AS PER CABINETRY** **SENT LOOSE**	405 300	EA PC

Clear Species will be used when ordering rustic species for cabinets. Maple will be substituted for PG Maple.

CORBELS, BUNNS, AND POSTS

BUNN FEET

A0529-DS4 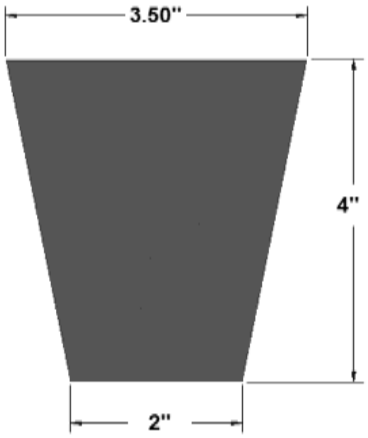	**A0529-DS4** BUNN FOOT 4"T X 2"W	510	EA
	PREP FOR FEET Prep for feet is a blocking that flushes with the frame and cabinet side, to allow attachment of the deco foot. Will recess toe kick back 5" - Blocking is 4 1/4" X 4 1/4"	300	PC
	FINISHED AS PER CABINETRY		
	SENT LOOSE		
A0544-DS4 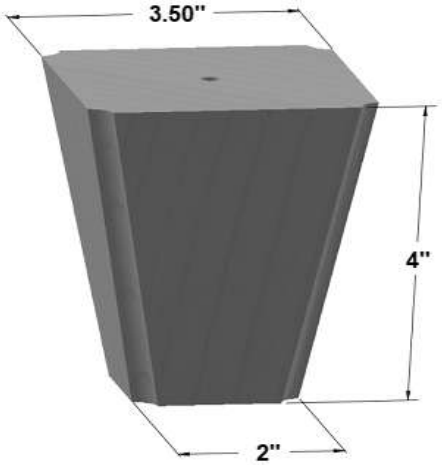	**A0544-DS4** BUNN FOOT 4"T X 3 1/2"W	585	EA
	PREP FOR FEET Prep for feet is a blocking that flushes with the frame and cabinet side, to allow attachment of the deco foot. Will recess toe kick back 5" - Blocking is 4 1/4" X 4 1/4"	300	PC
	FINISHED AS PER CABINETRY		
	SENT LOOSE		
A0556-DS4 	**A0556-DS4** BUNN FOOT 4" X 4"	330	EA
	PREP FOR FEET Prep for feet is a blocking that flushes with the frame and cabinet side, to allow attachment of the deco foot. Will recess toe kick back 5" - Blocking is 4 1/4" X 4 1/4"	300	PC
	FINISHED AS PER CABINETRY		
	SENT LOOSE		

Clear Species will be used when ordering rustic species for cabinets. Maple will be substituted for PG Maple.

PEDESTALS

LEFT PEDESTAL FOOT 	**PFL** 6" X 1 1/8" X 4" **FINISHED AS PER CABINETRY** **N/A IN WHITE OAK**	135	EA
MIDDLE PEDESTAL FOOT 	**PFM1** 11 3/8" X 1 3/4" X 1 11/16" **FINISHED AS PER CABINETRY** **N/A IN WHITE OAK**	165	EA
RIGHT PEDESTAL FOOT 	**PFR** 6" X 1 1/8" X 4" **FINISHED AS PER CABINETRY** **N/A IN WHITE OAK**	135	EA
CORNER PEDESTAL 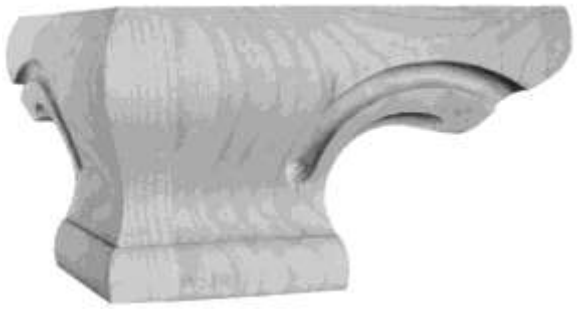	**PFCS** 6 3/4" X 6 3/4" X 4" **FINISHED AS PER CABINETRY** **N/A IN WHITE OAK**	210	EA

Clear Species will be used when ordering rustic species for cabinets. Maple will be substituted for Paint Grade.

CORBELS, BUNNS, AND POSTS

CORBELS

A0753-09 	**A0753-09** 8 3/4" TALL **FINISHED AS PER CABINETRY**	795	EA	A0753-12 	**A0753-12** 12" TALL **FINISHED AS PER CABINETRY**	930	EA
A0755-09 	**A0755-09** 8 3/4" TALL **FINISHED AS PER CABINETRY**	600	EA	A0755-12 	**A0755-12** 12" TALL **FINISHED AS PER CABINETRY**	810	EA
O8023-12 	**O8023-12** 12 1/4" TALL **FINISHED AS PER CABINETRY**	1425	EA	MILAN MISSION CORBEL 	**A8013** 10" TALL **FINISHED AS PER CABINETRY**	1080	EA

Clear Species will be used when ordering rustic species for cabinets. Maple will be substituted for Paint Grade.

CORBELS

CARPI MISSION CORBEL 	**A8008** 6" TALL **FINISHED AS PER CABINETRY**	450	EA	SUPPORTS 	**SUPPORTS** 8" X 10" COUNTERTOP **FINISHED AS PER CABINETRY**	231	EA
SUPPORTS 	**SUPPORTS-JLBB4** **FINISHED AS PER CABINETRY**	231	EA				

Clear Species will be used when ordering rustic species for cabinets. Maple will be substituted for Paint Grade.

CORBELS, BUNNS, AND POSTS

POSTS

A0915-35-30		**A0915-35-30**	675	EA	A0914-35-30		**A0914-35-30**	675	EA
		35 1/4" TALL					35 1/4" TALL		
		SPLIT POST SPLITS POST TO EQUAL HALVES	225	EA			**SPLIT POST** SPLITS POST TO EQUAL HALVES	225	EA
		ACORNER NOTCHES CORNER OF POST	300	EA			**ACORNER** NOTCHES CORNER OF POST	300	EA
		FINISHED AS PER CABINETRY					**FINISHED AS PER CABINETRY**		
		N/A IN RIFT WHITE OAK					**N/A IN RIFT WHITE OAK**		
A0915-35-45	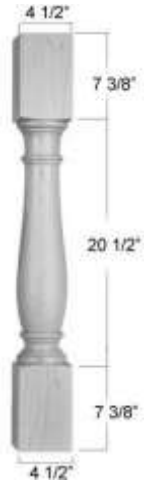	**A0915-35-45**	1275	EA	A0914-35-45		**A0914-35-45**	900	EA
		35 1/4" TALL					35 1/4" TALL		
		SPLIT POST SPLITS POST TO EQUAL HALVES	225	EA			**SPLIT POST** SPLITS POST TO EQUAL HALVES	225	EA
		ACORNER NOTCHES CORNER OF POST	300	EA			**ACORNER** NOTCHES CORNER OF POST	300	EA
		FINISHED AS PER CABINETRY					**FINISHED AS PER CABINETRY**		
		N/A IN RIFT WHITE OAK					**N/A IN RIFT WHITE OAK**		
A0918-35-45	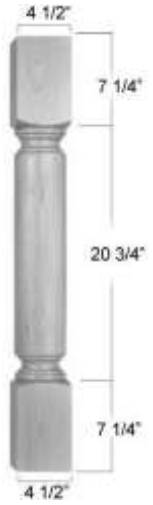	**A0918-35-45**	1650	EA	A0918-35-30	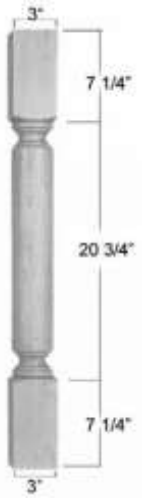	**A0918-35-30**	1020	EA
		35 1/4" TALL					35 1/4" TALL		
		SPLIT POST SPLITS POST TO EQUAL HALVES	225	EA			**SPLIT POST** SPLITS POST TO EQUAL HALVES	225	EA
		ACORNER NOTCHES CORNER OF POST	300	EA			**ACORNER** NOTCHES CORNER OF POST	300	EA
		FINISHED AS PER CABINETRY					**FINISHED AS PER CABINETRY**		
		N/A IN RIFT WHITE OAK					**N/A IN RIFT WHITE OAK**		

Clear Species will be used when ordering rustic species for cabinets. Maple will be substituted for Paint Grade.

POSTS

A0919-35-45	**A0919-35-45**	1200	EA	A0928-35-35	**A0928-35-35**	720	EA
	35 1/4" TALL				35 1/4" TALL		
	SPLIT POST SPLITS POST TO EQUAL HALVES	225	EA		**SPLIT POST** SPLITS POST TO EQUAL HALVES	225	EA
	ACORNER NOTCHES CORNER OF POST	300	EA		**ACORNER** NOTCHES CORNER OF POST	300	EA
	FINISHED AS PER CABINETRY				**FINISHED AS PER CABINETRY**		
	N/A IN RIFT WHITE OAK				**N/A IN RIFT WHITE OAK**		
A0929-35-35	**A0929-35-35**	960	EA	A0927-35-30	**A0927-35-30**	645	EA
	35 1/4" TALL			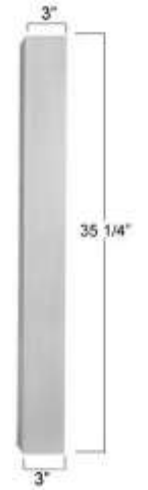	35 1/4" TALL		
	SPLIT POST SPLITS POST TO EQUAL HALVES	225	EA		**SPLIT POST** SPLITS POST TO EQUAL HALVES	225	EA
	ACORNER NOTCHES CORNER OF POST	300	EA		**ACORNER** NOTCHES CORNER OF POST	300	EA
	FINISHED AS PER CABINETRY				**FINISHED AS PER CABINETRY**		
	N/A IN RIFT WHITE OAK				**N/A IN RIFT WHITE OAK**		
A0927-41-35	**A0927-41-35**	975	EA	A0927-35-45	**A0927-35-45**	1236	EA
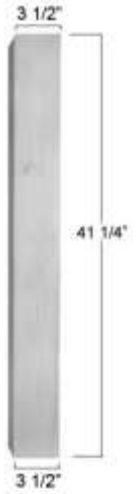	41 1/4" TALL				35 1/4" TALL		
	SPLIT POST SPLITS POST TO EQUAL HALVES	225	EA		**SPLIT POST** SPLITS POST TO EQUAL HALVES	225	EA
	ACORNER NOTCHES CORNER OF POST	300	EA		**ACORNER** NOTCHES CORNER OF POST	300	EA
	FINISHED AS PER CABINETRY				**FINISHED AS PER CABINETRY**		
	N/A IN RIFT WHITE OAK				**N/A IN RIFT WHITE OAK**		

Clear Species will be used when ordering rustic species for cabinets. Maple will be substituted for Paint Grade.

NOTES OR ADDITIONS

NOTES OR ADDITIONS

NOTES OR ADDITIONS

MOLDINGS

MOLDINGS COME IN A 96" NOMINAL LENGTH. DUE TO THE NATURE OF WOOD THERE CAN BE UP TO 3" ON ONE, OR BOTH ENDS, THAT MAY REQUIRE TRIMMING. EACH PIECE WILL HAVE A MINIMUM OF 90" OF USABLE MOLDING

Clear Species will be used when ordering rustic species for cabinets.
Maple will be substituted for Paint Grade. **White Oak will be used for Rift White Oak orders.**

IMPERIAL CROWN 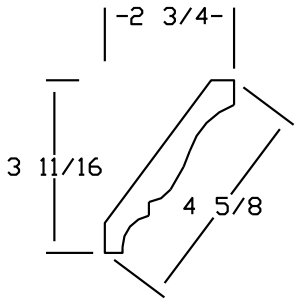	**IMPERIAL CROWN** 96" NOMINAL LENGTH	390	EA
CABCROWN 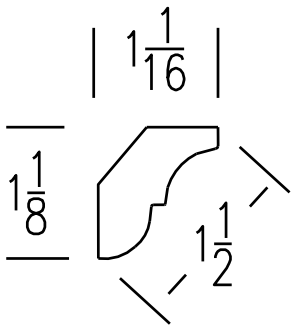	**CABCROWN** 96" NOMINAL LENGTH	144	EA
SHAKER CROWN 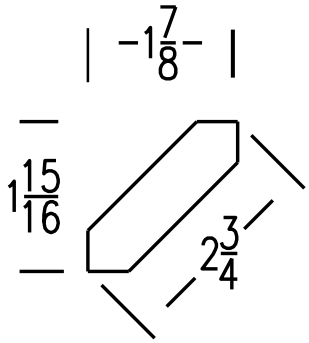	**SHKRCROWN** 96" NOMINAL LENGTH	306	EA
MID SHAKER CROWN 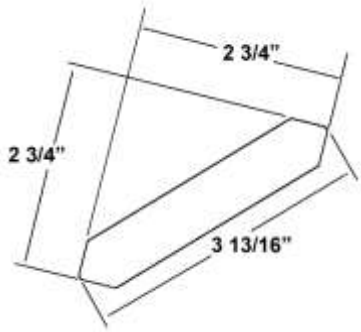	**MIDSHKRCROWN** 96" NOMINAL LENGTH	360	EA

MOLDINGS

MOLDINGS COME IN A 96" NOMINAL LENGTH. DUE TO THE NATURE OF WOOD THERE CAN BE UP TO 3" ON ONE, OR BOTH ENDS, THAT MAY REQUIRE TRIMMING. EACH PIECE WILL HAVE A MINIMUM OF 90" OF USABLE MOLDING

Clear Species will be used when ordering rustic species for cabinets.
Maple will be substituted for Paint Grade. **White Oak will be used for Rift White Oak orders.**

CROWN 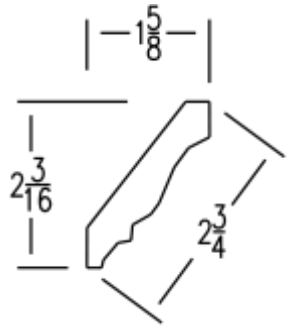	**CROWN** 96" NOMINAL LENGTH	306	EA
COVE CROWN 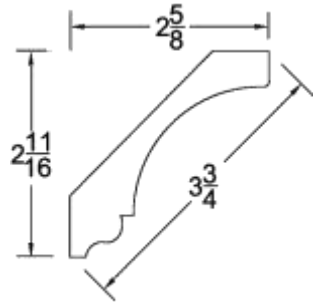	**COVECROWN** 96" NOMINAL LENGTH	336	EA
LARGE COVE CROWN 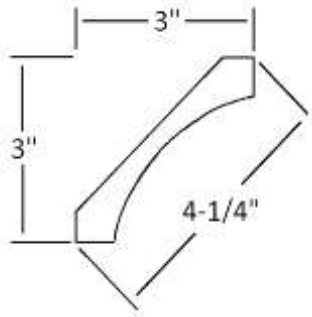	**LARGECOVECROWN** 96" NOMINAL LENGTH	360	EA
FURNITURE BASE 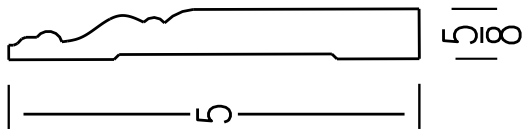	**FURNITURE BASE** 96" NOMINAL LENGTH N/A IN WHITE OAK	429	EA
FURN5119 FURNITURE BASE 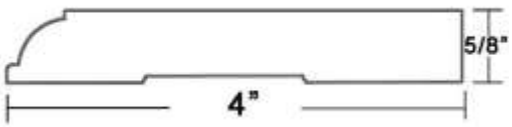	**FURN5119** 96" NOMINAL LENGTH	345	EA

MOLDINGS

MOLDINGS COME IN A 96" NOMINAL LENGTH. DUE TO THE NATURE OF WOOD THERE CAN BE UP TO 3" ON ONE, OR BOTH ENDS, THAT MAY REQUIRE TRIMMING. EACH PIECE WILL HAVE A MINIMUM OF 90" OF USABLE MOLDING

Clear Species will be used when ordering rustic species for cabinets.
Maple will be substituted for Paint Grade. **White Oak will be used for Rift White Oak orders.**

3/8" X 2 1/2" SOLID STOCK MULLION 	**MULLION STRIP** 96" LENGTH TWO LONG EDGES FINISHED	255	EA
4" TALL CLASSIC CROWN RISER/BASE MOLDING   SHOWN W/4348 EDGE	**CCR-4X85-95RL** **SF-EDGE96** TO SAND FINISH CROWN RISER EDGE RISER WILL HAVE ONE LONG EDGE PROFILE TO MATCH DOOR EDGE MITER DOORS WILL HAVE A SHAKER EDGE UNLESS SPECIFIED DIFFERENTLY RANDOM LENGTH BETWEEN 85" AND 95" LONG CAN NOT SPECIFY LENGTH 3/4" X 4" X 85" TO 95"	510 75	EA EA
6" TALL CLASSIC CROWN RISER - RANDOM LENGTH 	**CCR-6X85-95RL** **SF-EDGE96** TO SAND FINISH CROWN RISER EDGE RISER WILL HAVE ONE LONG EDGE PROFILE TO MATCH DOOR EDGE MITER DOORS WILL HAVE A SHAKER EDGE UNLESS SPECIFIED DIFFERENTLY RANDOM LENGTH BETWEEN 85" AND 95" LONG CAN NOT SPECIFY LENGTH NOT AVAILABLE OVER 6" TALL 3/4" X 6" X 85" TO 95"	675 75	EA EA
SHIPLAP 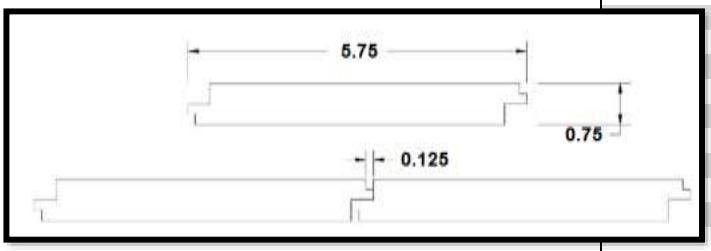	**SHIPLAP** 96" NOMINAL LENGTH - 3/4" X 5" THIS IS A SPECIAL ORDER ITEM 4 TO 6 WEEK LEAD TIME SHIPLAP WILL HAVE RUSTIC CHARACTERISTICS WHEN ORDERED WITH KNOTTY ALDER AND RUSTIC BEECH PAINT GRADE - HD & PAINT GRADE - MAPLE WILL BE MADE OUT OF HDF	429	EA
FINISHED TOE KICK 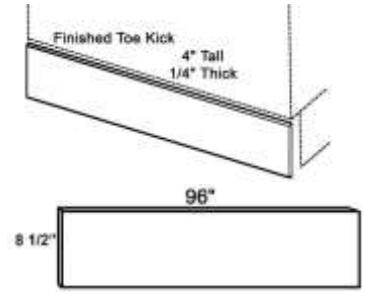	**FINTK** 1/4" X 4" X 96" VC FINISHED TOE KICK TOE KICK STAINED TO MATCH CABINETS 96" NOMINAL LENGTH **FINTK-ADA** 1/4" X 8 1/2" X 96" VC FINISHED TOE KICK TOE KICK STAINED TO MATCH CABINETS	66 90	EA EA

MOLDINGS

MOLDINGS COME IN A 96" NOMINAL LENGTH. DUE TO THE NATURE OF WOOD THERE CAN BE UP TO 3" ON ONE, OR BOTH ENDS, THAT MAY REQUIRE TRIMMING. EACH PIECE WILL HAVE A MINIMUM OF 90" OF USABLE MOLDING

Clear Species will be used when ordering rustic species for cabinets.
Maple will be substituted for Paint Grade. **White Oak will be used for Rift White Oak orders.**

CAB DOOR MOLDING 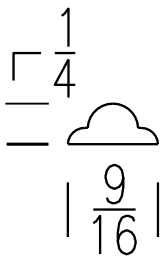	**CABDOORMOLD** 96" NOMINAL LENGTH	189	EA
SCRIBE 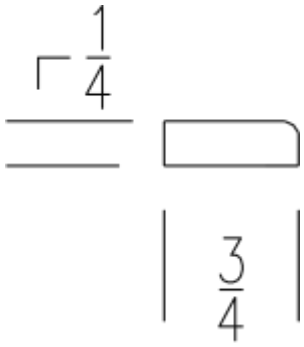	**SCRIBE** 96" NOMINAL LENGTH	111	EA
BASE SHOE 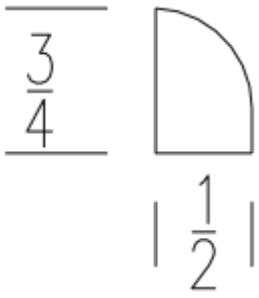	**SHOE** 96" NOMINAL LENGTH	111	EA
COUNTEREDGE 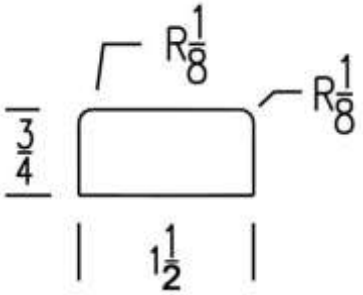	**COUNTEREDGE** 96" LENGTH COUNTERTOP EDGING, ROUND OVER EDGE 96" NOMINAL LENGTH	183	EA

MOLDINGS

MOLDINGS COME IN A 96" NOMINAL LENGTH. DUE TO THE NATURE OF WOOD THERE CAN BE UP TO 3" ON ONE, OR BOTH ENDS, THAT MAY REQUIRE TRIMMING. EACH PIECE WILL HAVE A MINIMUM OF 90" OF USABLE MOLDING

Clear Species will be used when ordering rustic species for cabinets.
Maple will be substituted for Paint Grade. **White Oak will be used for Rift White Oak orders.**

OUTCORN 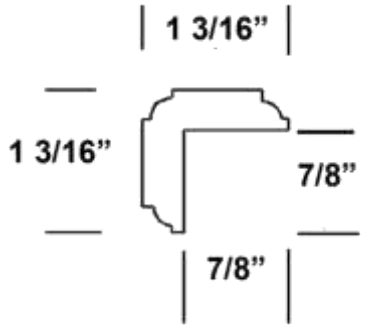	**OUTCORN** 96" NOMINAL LENGTH OUTSIDE CORNER	180	EA
OUTCORN WITH SHAKER PROFILE 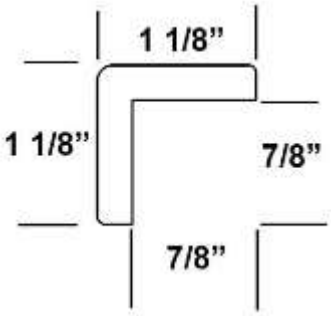	**OUTCORNSHAKER** 96" NOMINAL LENGTH OUTSIDE CORNER	180	EA
OUTCORN 22 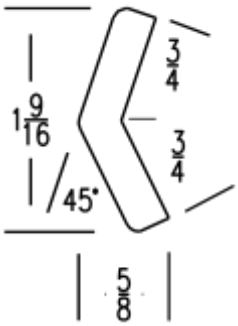	**OUTCORN 22** 96" NOMINAL LENGTH 22 DEGREE OUTSIDE CORNER	156	EA
INCORN 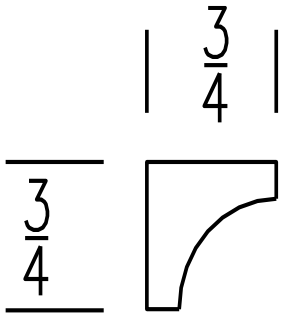	**INCORN** 96" NOMINAL LENGTH INSIDE CORNER	123	EA

MOLDINGS

MOLDINGS COME IN A 96" NOMINAL LENGTH. DUE TO THE NATURE OF WOOD THERE CAN BE UP TO 3" ON ONE, OR BOTH ENDS, THAT MAY REQUIRE TRIMMING. EACH PIECE WILL HAVE A MINIMUM OF 90" OF USABLE MOLDING

Clear Species will be used when ordering rustic species for cabinets.
Maple will be substituted for Paint Grade. **White Oak will be used for Rift White Oak orders.**

LIGHT RAIL-SHKR 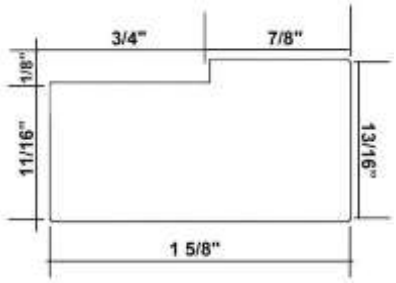	**LIGHT RAIL-SHKR** 96" NOMINAL LENGTH	222	EA
LIGHT RAIL 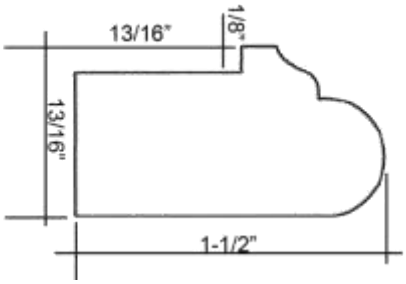	**LIGHT RAIL** 96" NOMINAL LENGTH	183	EA
BATTEN 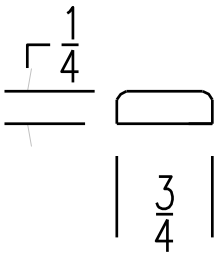	**BATTEN** 96" NOMINAL LENGTH	111	EA
MIRROR MOLDING 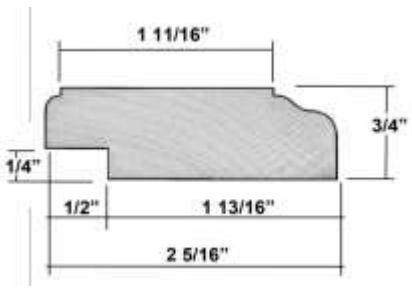	**MIRROR MOLDING** 96" NOMINAL LENGTH N/A IN RIFT WHITE OAK	255	EA

MOLDINGS

MOLDINGS COME IN A 96" NOMINAL LENGTH. DUE TO THE NATURE OF WOOD THERE CAN BE UP TO 3" ON ONE, OR BOTH ENDS, THAT MAY REQUIRE TRIMMING. EACH PIECE WILL HAVE A MINIMUM OF 90" OF USABLE MOLDING

Clear Species will be used when ordering rustic species for cabinets.
Maple will be substituted for Paint Grade. **White Oak will be used for Rift White Oak orders.**

GATEWAY 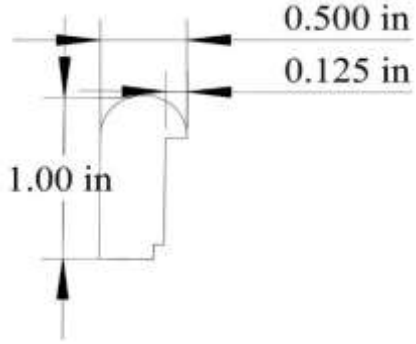	**GATEWAY** 96" NOMINAL LENGTH	75	EA
SQUARE SHOE 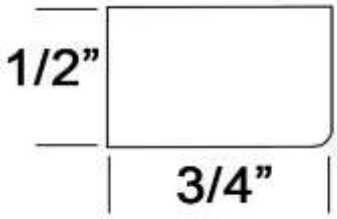	**SQUARE SHOE** 96" NOMINAL LENGTH	114	EA

NOTES OR ADDITIONS

CABINET MODIFICATIONS

DOOR OPTIONS

BLUMOTION DOOR HINGE - UPGRADE 	**BLUMCLIPUPGRADE** UPGRADE TO BLUM SOFT CLOSE DETACHABLE CLIP HINGE INSTALLED IN CABINET THIS IS A STYLE OPTION AND WILL APPLY TO ALL DOORS	54	DR
CHANGE HINGE SIDE 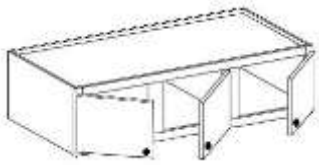 STANDARD  HINGE SIDE CHANGED ON LEFT DOOR	**HINGE CHANGE** TO CHANGE WHICH SIDE THE DOOR IS HINGED ON	0.01	EA
EXTRA DOOR 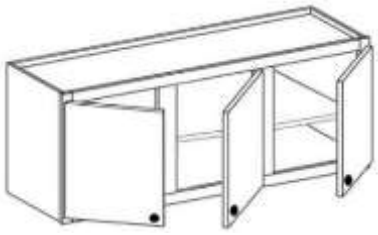	**EXTRA DOOR** EXTRA DOOR ON CABINET 3 INSTEAD OF 2, ETC. MUST SPECIFY HINGE SWING	450	EA
DELETE DOORS (PER CABINET) 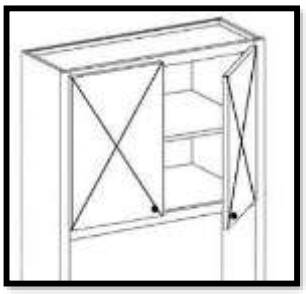	**DELETE DOORS** ANY CABINET CAN BE ORDERED WITHOUT DOORS	-150	PC
CABINET DOOR SENT LOOSE 	**CABDOOR LOOSE** WILL NOT BORE FOR HINGES (NO ROUT) UNLESS SPECIFIED HINGES ARE INCLUDED (SENT LOOSE)	0.01	EA

CABINET MODIFICATIONS

DOOR OPTIONS

FRAME & OPERATING DOOR USED AS CABINET SIDE

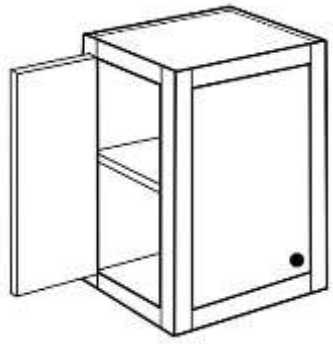

FFDCS-WL

L INDICATES LEFT SIDE OF CABINET - HINGE WILL BE ON LEFT
R INDICATES RIGHT SIDE OF CABINET - HINGE WILL BE ON RIGHT

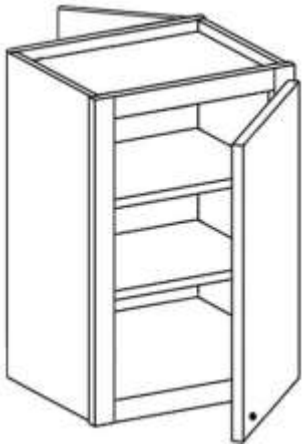

FFDCS-WBACKR

BACKL INDICATES BACK OF CABINET WITH HINGE ON LEFT
BACKR INDICATES BACK OF CABINET WITH HINGE ON RIGHT

WHEN THERE IS A FLUSH TOE KICK FRONT AND RECESS TOE ON THE SIDE, OR VICE VERSA, THE STILE WILL BE DROPPED ON THE SIDE WITH THE FFDCS. (BASE CABINETS)

WALL FACE FRAME & DOOR CABINET SIDE		
FFDCS-WL	1020	EA
FFDCS-WR	1020	EA
BASE FACE FRAME & DOOR CABINET SIDE W/FLUSH TOE		
FFDCS-BL-FT	1530	EA
FFDCS-BR-FT	1530	EA
BASE FACE FRAME & DOOR CABINET SIDE W/RECESSED TOE		
FFDCS-BL-RTK	1530	EA
FFDCS-BR-RTK	1530	EA
TALL FACE FRAME & DOOR CABINET SIDE W/FLUSH TOE		
FFDCS-TL-FT	2550	EA
FFDCS-TR-FT	2550	EA
TALL FACE FRAME & DOOR CABINET SIDE W/RECESSED TOE		
FFDCS-TL-RTK	2550	EA
FFDCS-TR-RTK	2550	EA
WALL FACE FRAME & DOOR CABINET BACK		
FFDCS-WBACKL	1020	EA
FFDCS-WBACKR	1020	EA
BASE FACE FRAME & DOOR CABINET BACK W/FLUSH TOE		
FFDCS-BBACKL-FT	1530	EA
FFDCS-BBACKR-FT	1530	EA
BASE FACE FRAME & DOOR CABINET BACK W/RECESSED TOE		
FFDCS-BBACKL-RTK	1530	EA
FFDCS-BBACKR-RTK	1530	EA
TALL FACE FRAME & DOOR CABINET BACK W/FLUSH TOE		
FFDCS-TBACKL-FT	2550	EA
FFDCS-TBACKR-FT	2550	EA
TALL FACE FRAME & DOOR CABINET BACK W/RECESSED TOE		
FFDCS-TBACKL-RTK	2550	EA
FFDCS-TBACKR-RTK	2550	EA

MOD FULL OVERLAY MODIFICATION OPTION

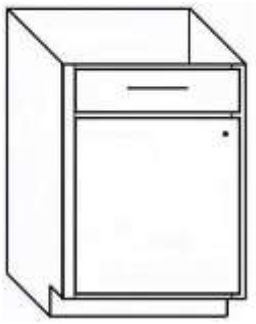

MOD-FOVLL

ON THE TOP OF A BASE & VANITY CABINETS, IT WILL CHANGE FROM STANDARD TO FULL OVERLAY, OR VICE VERSA.
ON A WALL OR TALL CABINET, THE REVEAL IS NORMALLY ALWAYS 1 1/4", SO IT WILL CHANGE TO 1/4" REVEAL REGARDLESS OF THE OVERLAY.

TOP OF CABINET		
MOD-FOVLT	210	PS
BOTTOM OF CABINET		
MOD-FOVLB	210	PS
LEFT SIDE OF CABINET		
MOD-FOVLL	210	PS
RIGHT SIDE OF CABINET		
MOD-FOVLR	210	PS

WHEN MOD IS USED IT WILL BE STANDARD OVERLAY ON HINGE SIDE

DOORS WILL BE EQUAL SIZE ON BUTT DOOR CABINETS

WHEN MODIFICATION OF FULL OVERLAY DOOR IS NEEDED

THERE IS AN 8% UPCHARGE ON TOTAL CABINET ORDER FOR FULL OVERLAY WHEN IT IS ORDERED

CHARGE IS PER CABINET SIDE

CABINET MODIFICATIONS

DOOR OPTIONS

SINGLE DOOR INSTEAD OF BUTT DOORS ON GARAGE PORTION OF WD CABINET 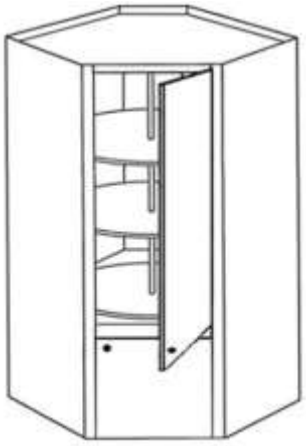	WDBAG-SD ONLY AVAILABLE ON DIAGONAL WALL WITH BUTT DOOR GARAGE		NC
LOCKING DOOR  LOCK ON BASE CABINET	**LOCKING DOOR** INSTALLED N/A ON FULL OVERLAY OR BUTT DOORS **STANDARD LOCK PLACEMENT ON DOOR STILE** WALLS - 7" UP FROM BOTTOM OF DOOR BASES - 7" DOWN FROM TOP OF DOOR TALLS - CENTER OF TOP DOOR ANY DOOR UNDER 18" - CENTER OF DOOR **IF YOU NEED A DIFFERENT LOCK PLACEMENT PUT THE INFORMATION IN YOUR NOTES** **LOCKING DOOR AND LOCKING DRAWER ON THE SAME ORDER WILL BE KEYED ALIKE UNLESS OTHERWISE SPECIFIED ON THE ORDER**	255	EA
SPLIT DOOR MOD   30/70 SPLIT DOOR SHOWN BEFORE AND AFTER MOD	SPLIT DOOR MOD ADDITIONAL CHARGE TO LINE UP SPLIT PANEL WITH CABINET OF DIFFERENT HEIGHT SEE SPLIT DOOR INFORMATION ON PAGE **55**	375	EA

CABINET MODIFICATIONS

DOOR OPTIONS

POCKET DOORS INSTALLED



POCKET DOORS-INSET	1530	PR
W/FILLER STRIPS		
CABINET OPENING HAS TO BE AT LEAST 14" TALL TO INSTALL POCKET DOORS.		
POCKET DOORS WILL NOT BE INSTALLED IN CABINETS OVER 42" TALL, 42" WIDE OR IN ANGLE CABINETS.		
NOT AVAILABLE WITH MOLDED DOORS.		
NOT AVAILABLE ON CABINETS WITH CLIPPED CORNERS.		
NOT AVAILABLE ON CABINETS UNDER 15" DEEP.		
N/A WITH THE BEDFORD, GATEWAY, HARBOR OR RIVERTON DOOR STYLE.		
NO SHELVES UNLESS TWO PARTITION MODS ARE ADDED CABINET MUST BE AT LEAST 24" TALL FOR SHELVING		
POCKET DOORS INSTALLED WILL BE INSET		
NO WARRANTY IF INSTALLED ON CABINET W/ NO BOTTOM RAIL		

POCKET DOORS INSTALLED



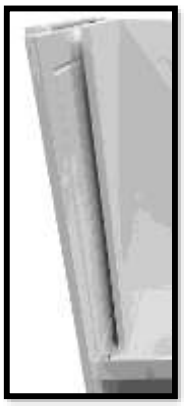

POCKET DOORS-OL	1530	PR
CABINET OPENING HAS TO BE AT LEAST 14" TALL TO INSTALL POCKET DOORS. N/A ON CABINETS UNDER 15" DEEP. N/A ON FULL OVERLAY		
POCKET DOORS WILL NOT BE INSTALLED IN CABINETS OVER 42" TALL, 42" WIDE OR IN ANGLE CABINETS.		
DOORS WILL OVERLAY OVER THE END PANEL 1/2" (IN BOTH STANDARD AND FULL OVERLAY)		
NOT AVAILABLE ON CABINETS WITH CLIPPED CORNERS		
NOT AVAILABLE WITH MOLDED DOORS		
NO SHELVES UNLESS TWO PARTITION MODS ARE ADDED CABINET MUST BE AT LEAST 24" TALL FOR SHELVING		
NO WARRANTY IF INSTALLED ON CABINET W/ NO BOTTOM RAIL		
N/A WITH THE BEDFORD, GATEWAY, HARBOR OR RIVERTON DOOR STYLE		

ADDITIONAL POCKET DOOR INFORMATION

FRONT VIEW

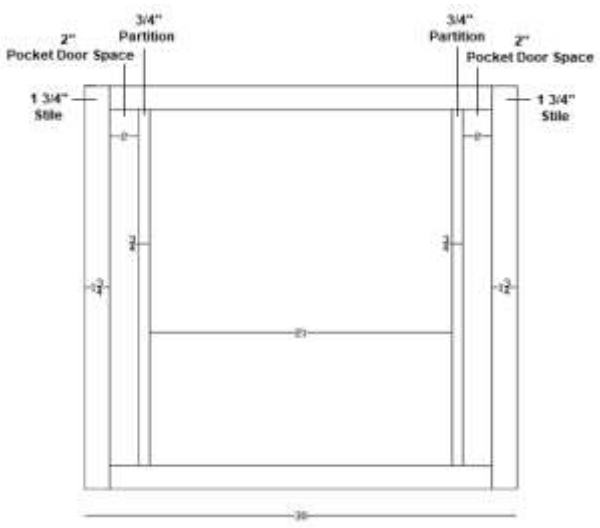

SIDE VIEW

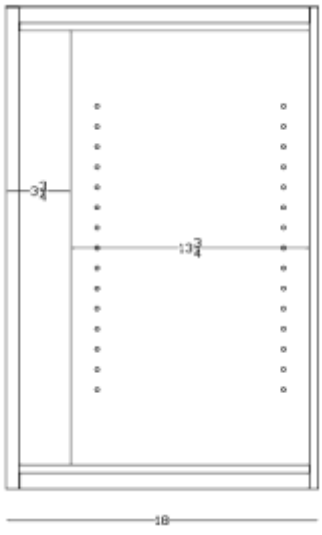

HARDWARE IS 2" LESS THAN CABINET DEPTH

THE TRACK IS HELD 1" BACK FROM THE FRONT

DEPENDING ON THE DEPTH OF THE CABINET AND THE GLIDE SIZE USED, THE POCKET DOORS ARE ABOUT 6" FROM THE BACK OF THE CABINET WHEN THEY ARE SLID ALL THE WAY IN.

PLEASE NOTE: THE PICTURES SHOWN ARE ONLY IF YOU ARE ADDING PARTITIONS WITH SHELVES IN THE CABINET. WE DO NOT ADD PARTITIONS AUTOMATICALLY.

CABINET MODIFICATIONS

AVENTOS LIFT SYSTEM - INSTALLED

HF-BIFOLD-TOP 	**HF-BIFOLD-TOP**	1950	EA
	MINIMUM CABINET HEIGHT - 24"		
	MAXIMUM CABINET HEIGHT - 42"		
	MINIMUM CABINET DEPTH - 12"		
	CABINET WIDTH 15" TO 36" WIDE		
	OPEN FRAME DOORS N/A ON FULL OVERLAY		
HK-TOP 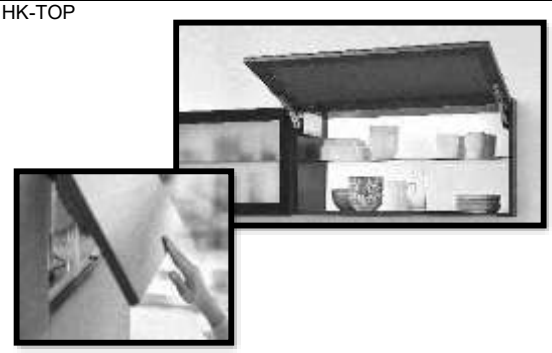	**HK-TOP**	1200	EA
	HK-TOP W/TIP ON	1395	EA
	INCLUDES FEATURE TO OPEN DOOR BY PUSHING ON THE FRONT		
	AVAILABLE ON CABINET WIDTH 15" TO 36" WIDE		
	CABINET WIDTH 15" TO 36" WIDE		
	MINIMUM CABINET HEIGHT - 12"		
	MAXIMUM CABINET HEIGHT - 24"		
	MINIMUM CABINET DEPTH - 12"		
HK-XS LIFT UP 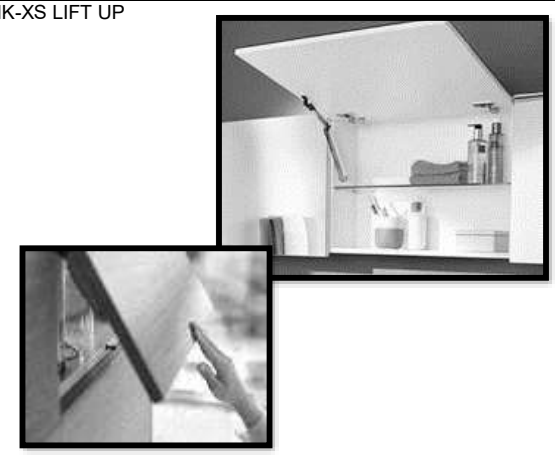	**HK-XS**	900	EA
	HK-XS-W/TIP ON	1095	EA
	INCLUDES FEATURE TO OPEN DOOR BY PUSHING ON THE FRONT		
	AVAILABLE ON CABINET WIDTH 24" TO 36" WIDE		
	MINIMUM CABINET HEIGHT - 12"		
	MAXIMUM CABINET HEIGHT - 24"		
	MAXIMUM WIDTH - 36"		
	MAY REQUIRE 2 LIFTS DEPENDING ON WEIGHT OF DOOR		
	OPEN FRAME DOORS N/A		
	AVAILABLE IN SOFT CLOSE		
HL-LIFT UP 	**HL-TOP**	1800	EA
	MINIMUM CABINET WIDTH - 15"		
	MAXIMUM CABINET HEIGHT - 21"		
	MINIMUM CABINET DEPTH - 12"		
	CABINET WIDTH 15" TO 36" WIDE		
	OPEN FRAME DOORS N/A		
HL-LIFT UP-APPLIANCE GARAGE 	**HL-AG**	1800	EA
	CORNER APPLIANCE GARAGE APPLICATION		
	18" TALL		

CABINET MODIFICATIONS

DRAWER OPTIONS

DRAWER FLOOR 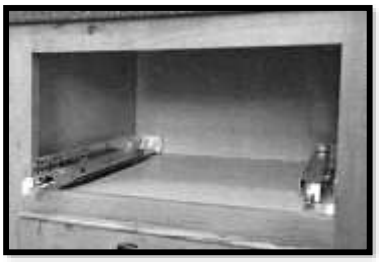	**DRAWER FLOOR** INSTALLED UNDER DRAWER IN TRASH UNITS	405	EA
LOCKING DRAWER 	**LOCKING DRAWER** INSTALLED LOCK WILL BE LOCATED IN TOP CENTER OF DRAWER NOT AVAILABLE WITH 5PC DRAWER FRONT OR MITER DRAWER FRONTS **LOCKING DRAWER AND LOCKING DOOR ON THE SAME ORDER WILL BE KEYED ALIKE UNLESS OTHERWISE SPECIFIED ON THE ORDER**	255	EA
EXTRA DRAWER ON CABINET 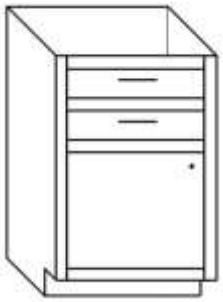 ADDS AN ADDITIONAL FULL WIDTH DRAWER	**ADD FW DRAWER** **DOES NOT INCLUDE DRAWER OR GUIDE UPGRADES**	405	EA
TOP DRAWER SPLIT TO TWO DRAWERS  CABINET WITH SPLIT TOP DRAWER MOD	**SPLIT TOP DRAWER** **DOES NOT INCLUDE DRAWER OR GUIDE UPGRADES**	405	EA
BREADBOARD - WOOD EDGE 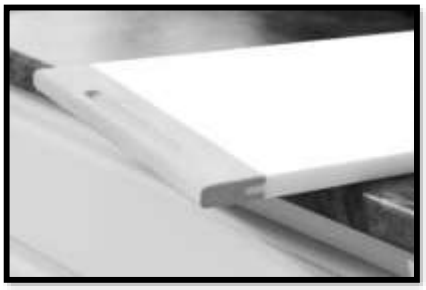	**BREADBOARD 11.25** **BREADBOARD 14.25** **BREADBOARD 17.25** **BREADBOARD 20.25** **BREADBOARD 23.25** **NO MODIFICATIONS** INSTALLED ABOVE DRAWER MADE OF HDPE NATURAL VIRGIN POLYETHYLENE SANA FINISH TOP 200 DEGREE SURFACE TEMP	900 900 900 900 900	EA EA EA EA EA

CABINET MODIFICATIONS

DRAWER OPTIONS

FALSE FRONT	FALSE FRONT INSTEAD OF A WORKING DRAWER		
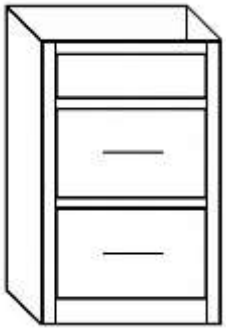	**FALSE FRONT**	75	EA
WORKING DRAWER ON TUB VANITY	MOD FOR WORKING TOP DRAWER ON TUB DRAWER VANITY		
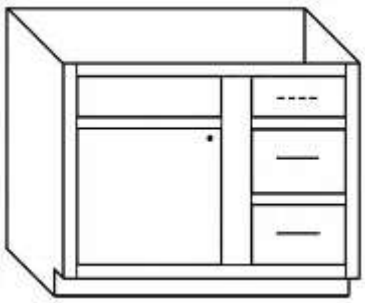	**WORKING DRAWER**	255	EA
	DOES NOT INCLUDE UPGRADES FOR DRAWER OR GUIDE		
	N/A ON 24" AND 27" WIDE TUB VANITY		
	24" & 27" HAVE FULL WIDTH FALSE FRONT		
FULL WIDTH FALSE FRONT ON TUB VANITY	MOD FOR FULL WIDTH FALSE FRONT ON TUB VANITY		
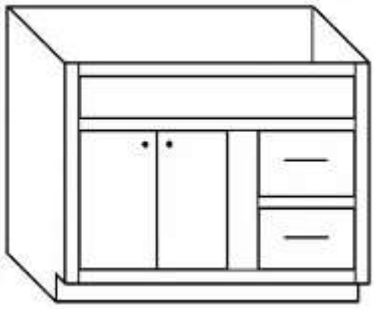	**VBTDFWFF**	150	EA
	ONLY AVAILABLE ON 30" THRU 48" WIDE CABINETS		
U-SHAPED SINK DRAWER	MOD FOR U-SHAPED DRAWER		
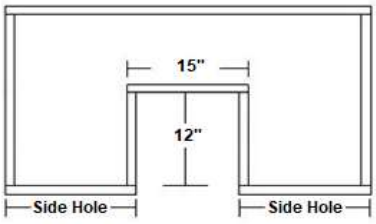	**USHAPEDRAWER-33**	1050	EA
	33" CABINET SIDEHOLE - 7"		
	USHAPEDRAWER-36	1050	EA
	36" CABINET SIDEHOLE - 8 1/2"		
	USHAPEDRAWER-39	1050	EA
	39" CABINET SIDEHOLE - 10 1/2"		
	**INCLUDES DT-UMFE**		
	ONLY AVAILABLE ON 33", 36", and 39" CABINETS		
	NO MODIFICATIONS		
	DRAWER FOR 24" DEEP BASE WILL BE 21" DEEP		
	DRAWER FOR 21" DEEP VANITY WILL BE 18" DEEP		

CABINET MODIFICATIONS

DRAWER OPTIONS

5 PC DRAWER FRONT UPGRADE 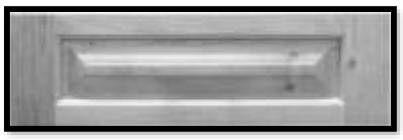	**5 PC DWR FRONT** MIN. HEIGHT FOR STANDARD OVERLAY 5 PIECE DRAWER IS 5 1/2" MIN. HEIGHT FOR MOD FULL OVERLAY 5 PIECE DRAWER IS 5 1/2" N/A ON B9, VB36SP, OR THE VB39SP IN STANDARD OVERLAY THIS PRICING IS FOR UPGRADE ONLY **FOR LOOSE DRAWER FRONT SEE PAGE 389**	129	EA
MOLDED 5 PIECE DRAWER UPGRADE 	**5 PC MLD FRONT** MIN. HEIGHT FOR STANDARD OVERLAY 5 PIECE DRAWER IS 5 1/2" MIN. HEIGHT FOR MOD FULL OVERLAY 5 PIECE DRAWER IS 5 1/2" N/A ON B9 OR VB36SP IN STANDARD OVERLAY THIS PRICING IS FOR UPGRADE ONLY **FOR LOOSE DRAWER FRONT SEE PAGE 389**	270	EA
DRAWER DIVIDER 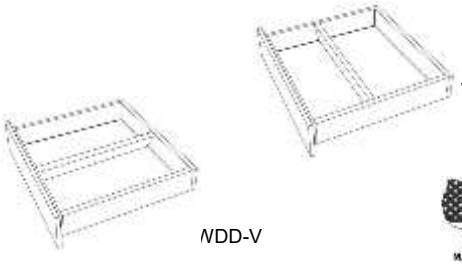	**WDD-V** DIVIDER GOES FRONT TO BACK **WDD-H** DIVIDER GOES SIDE TO SIDE DRAWER DIVIDER MADE BY KOCH BUILT OUT OF SAME MATERIAL AS DRAWER	75 75	EA EA
BLUMOTION-UNDER MOUNT SOFT CLOSE FULL EXTENSION 	**DT-UMFE** INCLUDES PRICE OF DOVETAIL DRAWER THIS IS A STYLE OPTION AND WILL APPLY TO ALL DRAWERS TRACK WEIGHT RATING 100LB	168	EA
DT-7/8 BLUMOTION UNDERMOUNT TRACK UPGRADE 	**DT-BSC 7/8** DOVETAIL DRAWER WITH 7/8 SOFT CLOSE EXTENSION TRACK WEIGHT RATING 75LB THIS IS A STYLE OPTION AND WILL APPLY TO ALL DRAWERS	87	EA
DOVETAIL WITH 3/4 SIDEMOUNT EXTENSION 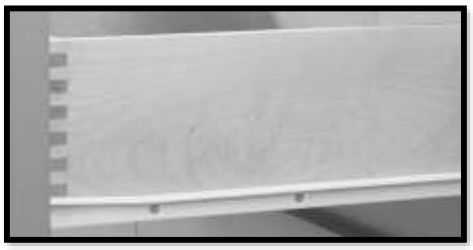	**DT-GSM** DOVETAIL DRAWER WITH 3/4 SIDEMOUNT EXTENSION TRACK WEIGHT CAPACITY 75LB THIS IS A STYLE OPTION AND WILL APPLY TO ALL DRAWERS	0	EA

CABINET MODIFICATIONS

ROLLOUT OPTIONS

ROLLOUT SHELF 	**ROSK-CLSHELF**	306	EA
	ROSK-FINSHELF	360	EA
	3/4 EXT SIDE MOUNT		
	FRONT WILL BE EDGEBANDED		
	NO OTHER GUIDE AVAILABLE		
UPGRADE 3 1/2" ROLLOUT TO A 5" ROLLOUT 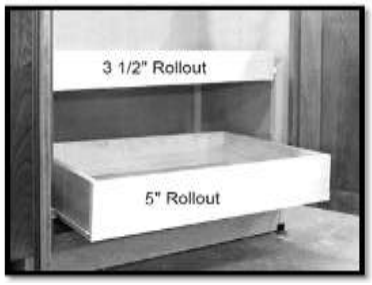	**ROSKROLLOUT-5**	75	EA
	ONLY AVAILABLE ON CABINETS THAT ALREADY INCLUDE DOVETAIL ROLLOUTS		
ROSK-3 1/2" TALL ROLLOUTS - INSTALLED 	**ROSK-3 1/2** ROLLOUT INSTALLED (INCLUDES ADJUSTABLE HARDWARE)	360	EA
	TRACK WEIGHT RATING OF 75 LBS		
	ROLLOUT DRAWERS 3 1/2" TALL		
	N/A IN CABINETS WITH CLIPPED CORNERS		
	DRAWER BOX, ROLLOUTS AND TRACK WILL MATCH PER ORDER		
	DRAWER BOX/TRACK SELECTION UPCHARGES WILL APPLY		
	ROLLOUTS ARE NOT AVAILABLE IN CABINETS THAT ARE LESS THAN 15" WIDE, LESS THAN 15" DEEP & OVER 39" WIDE		
ROSK-5" TALL ROLLOUTS - INSTALLED 	**ROSK-5** ROLLOUT INSTALLED (INCLUDES ADJUSTABLE HARDWARE)	435	EA
	TRACK WEIGHT RATING OF 75 LBS		
	ROLLOUT DRAWERS 5" TALL		
	N/A IN CABINETS WITH CLIPPED CORNERS		
	DRAWER BOX, ROLLOUTS AND TRACK WILL MATCH PER ORDER		
	DRAWER BOX/TRACK SELECTION UPCHARGES WILL APPLY		
	ROLLOUTS ARE NOT AVAILABLE IN CABINETS THAT ARE LESS THAN 15" WIDE, LESS THAN 15" DEEP & OVER 39" WIDE		

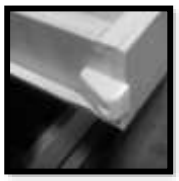

TO PROTECT THE DOOR FROM SCRATCHES, BUMPERS WILL BE INSTALLED ON THE ROLLOUT SIDE THAT IS AGAINST THE DOOR. THIS WILL BE ON ALL STANDARD OVERLAY ROLLOUTS AND ON MODIFIED FULL OVERLAY ROLLOUTS WHERE SPACE ALLOWS.

ROLLOUTS ARE NOT AVAILABLE IN CABINETS THAT ARE LESS THAN 15" WIDE, LESS THAN 15" DEEP & OVER 39" WIDE.

CABINET MODIFICATIONS

FACE FRAME MODIFICATION

EXTRA SECTION IN PANTRY/LINEN	**EXTRA SECTION-P**	900	PC
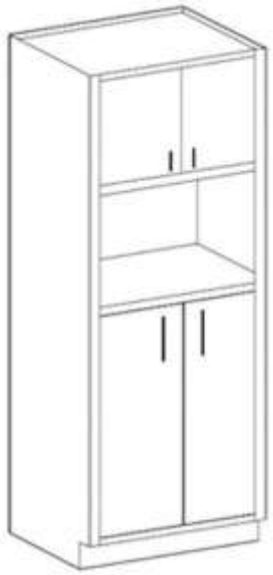 PANTRY WITH EXTRA SECTION	**DOES NOT INCLUDE DOORS** **USE EXTRA DOOR MOD ON PAGE 341 IF DOORS ARE NEEDED**		
EXTRA SECTION	**EXTRA SECTION**	510	PC
 BASE WITH EXTRA SECTION	EXTRA SECTION IN BASE, OFFICE, VANITY, OR WALL CABINET **DOES NOT INCLUDE DOORS** **USE EXTRA DOOR MOD ON PAGE 341 IF DOORS ARE NEEDED**		
EXTENDED STILE	**EXT STILE 3/4L**	75	EA
	EXT STILE 3/4R	75	EA
	EXT STILE 1 3/4L	135	EA
	EXT STILE 1 3/4R	135	EA
	EXT STILE 3L	195	EA
	EXT STILE 3R	195	EA
	EXT STILE 4L	255	EA
	EXT STILE 4R	255	EA
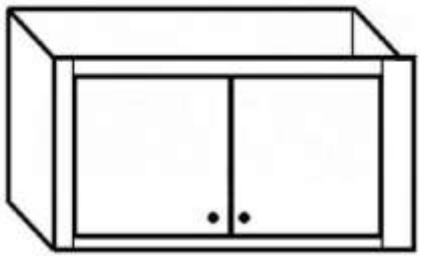	CABINET BOX WIDTH WILL STAY THE SAME FACE FRAME WIDTH WILL INCREASE BY 3/4", 1 3/4", 3", OR 4" 3/4", 1 3/4", 3", or 4" EXTENSION ONLY MAY NOT BE AVAILABLE ON CABINETS THAT ARE LARGER THAN 48" WIDE X 48" TALL (OR TALLER) MAY BE ORDERED ON BASE, WALL, VANITY, OFFICE, AND TALL CABINETS.		

CABINET MODIFICATIONS

FACE FRAME OPTIONS

WALL DROP STILE	**WDSL**	378	EA
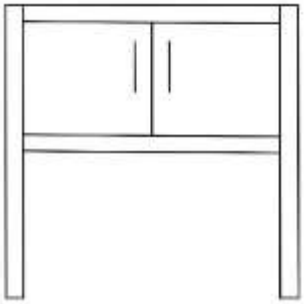	**WDSR**	378	EA
WDSB	**WDSB**	756	EA
	WALL DROP STILE FINISHED ON INSIDE OF DROP STILE		
	FWDSL	678	EA
	FWDSR	678	EA
	FWDSB	1356	EA
	DROPPED STILE CAN BE ON LEFT, RIGHT, OR BOTH SIDES		
	SIDE OF THE CABINET IS EXTENDED DOWN		
	DROP STILE N/A OVER 48"		
	DOES NOT INCLUDE BACK		
DROP STILE	BASE DROP STILE		
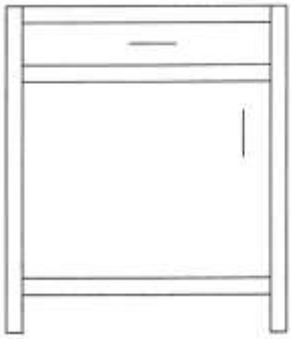	**BDSL**	225	EA
	BDSR	225	EA
BDSB	**BDSB**	450	EA
	OFFICE DROP STILE		
	ODSL	225	EA
	ODSR	225	EA
	ODSB	450	EA
	TALL DROP STILE		
	TDSL	225	EA
	TDSR	225	EA
	TDSB	450	EA
	VANITY DROP STYLE		
	VDSL	225	EA
	VDSR	225	EA
	VDSB	450	EA
	DROPPED STILE CAN BE ON LEFT, RIGHT, OR BOTH SIDES		
	SIDE OF THE CABINET IS EXTENDED DOWN		
1 1/2" STILE	**1 1/2SL**	225	EA
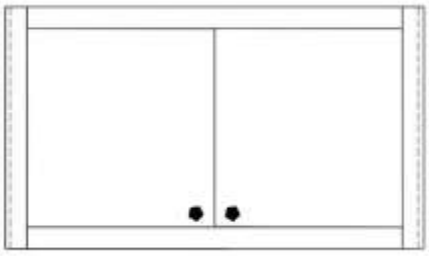	**1 1/2SR**	225	EA
	1 1/2SB	450	EA
	REPLACES A 1 3/4" STILE		
	NOT AVAILABLE ON DIAGONAL OR EASY REACH CABINETS		
MULLION MODIFICATION	**MULLION MOD**	255	EA
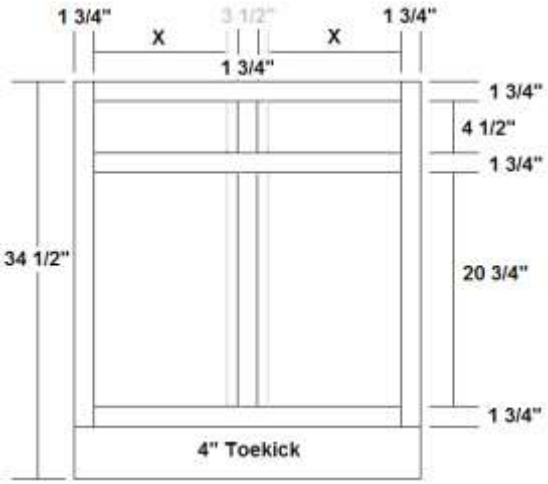	1 3/4" MULLION INSTEAD OF 3 1/2" MULLION		

CABINET MODIFICATIONS

FACE FRAME OPTIONS

EXTENDED RAIL - 1 3/4" OR 3"

EXTENDED TOP RAIL UP

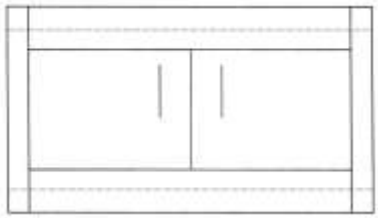

EXTENDED BOTTOM RAIL DOWN

EXTEND TOP RAIL UP		
EXT RAIL-T1 3/4	225	EA
EXT RAIL-T3	285	EA
EXTEND BOTTOM RAIL DOWN		
EXT RAIL-B1 3/4	225	EA
EXT RAIL-B3	285	EA
THIS EXTENDS TOP RAIL UP 1 3/4" OR 3", OR		
BOTTOM RAIL DOWN 1 3/4" 0R 3".		
ADDING 1 3/4" TO THE HEIGHT OF THE FRAME OPENING ONLY.		
BOX HEIGHT STAYS THE SAME		
SIDES OF THE CABINET ARE NOT EXTENDED UP OR DOWN		

NO BOTTOM RAIL

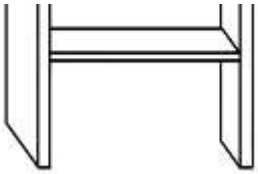

NO BOTTOM RAIL ON WALL CABINET

NBR	135	EA
MUST BE APPROVED BY OFFICE		
N/A ON BASES, VANITIES, OFFICE, OR TALLS		
USED WHEN SITTING A WALL CABINET ON A COUNTERTOP		

VALANCE RAIL

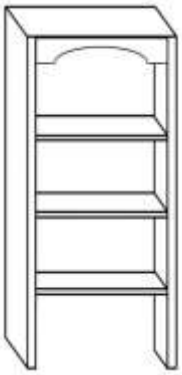

BCVR-T

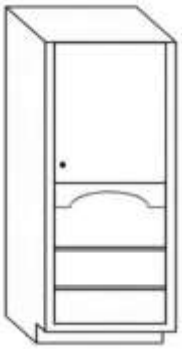

TVR-M

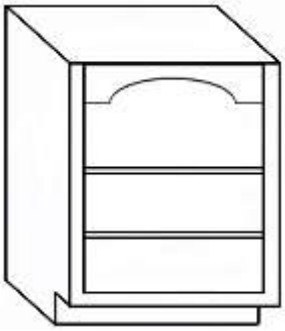

BVR-T

5 3/4" ARCHED RAIL USED IN PLACE OF STD 1 3/4" RAIL
CAN BE USED ON BASE, VANITY, WALL, OFFICE, TALL, OR BOOK CASE
CAN BE USED AS TOP RAIL OR CENTER RAIL
DOES NOT CHANGE HEIGHT OF CABINET
WILL BE INTEGRATED RAIL

BOOKCASE		
BCVR-T	435	EA
BOOKCASE VALANCE TOP RAIL		
WALL		
WVR-T	435	EA
WALL VALANCE TOP RAIL		
WVR-M	435	EA
WALL VALANCE MIDDLE RAIL		
BASE		
BVR-T	435	EA
BASE VALANCE TOP RAIL		
BVR-M	435	EA
BASE VALANCE MIDDLE RAIL		
VANITY		
VVR-T	435	EA
VANITY VALANCE TOP RAIL		
VVR-M	435	EA
VANITY VALANCE MIDDLE RAIL		
TALL		
TVR-T	435	EA
PANTRY VALANCE TOP RAIL		
TVR-M	435	EA
PANTRY VALANCE MIDDLE RAIL		

ADD MULLION



ADDMULLION-1 3/4	255	EA
ADDMULLION-3 1/2	255	EA

CABINET MODIFICATIONS

FACE FRAME OPTIONS

3 1/2" LIGHT BOTTOM RAIL 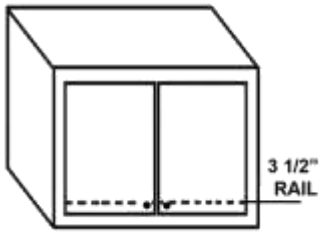	**LIGHT BTM RAIL** 3 1/2" BOTTOM RAIL IN PLACE OF STD 1 3/4" RECESSES THE BOTTOM FLOOR UP DOORS WILL COVER PART OF THE LIGHT RAIL SO THAT THE CABINET WILL HAVE A STANDARD REVEAL USED WHEN UNDER CABINET LIGHTING IS DESIRED	135	EA
WIDE TOP, CENTER, OR BOTTOM RAIL 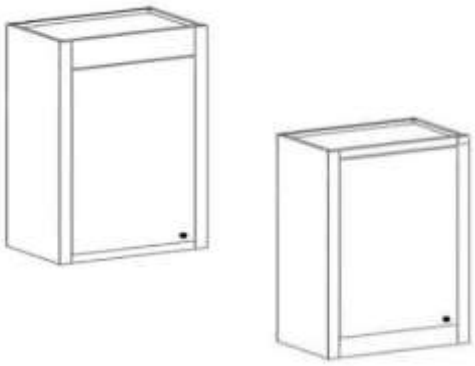 WIDE RAIL SHOWN AT TOP AND BOTTOM OF CABINET	**WTR-3** **WTR-3 1/2** **WTR-5 3/4** **WCR-3** **WCR-3 1/2** **WCR-5 3/4** **WBR-3** **WBR-3 1/2** **WBR-5 3/4** 3", 3 1/2", or 5 3/4" RAILS IN PLACE OF STD 1 3/4" WIDE RAIL DECREASES THE DOOR OPENING WIDE TOP RAIL IS USED FOR SOME CROWN APPLICATION WHEN CABINETS ARE FLUSH TO CEILING MAKES CABINET OPENING SHORTER - DOORS WILL BE SHORTER	135 135 135 135 135 135 135 135 135	EA EA EA EA EA EA EA EA EA
NARROW TOP, CENTER, OR BOTTOM RAIL 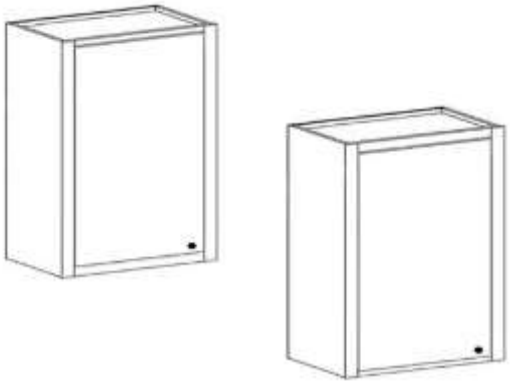 NARROW RAIL SHOWN AT TOP AND BOTTOM OF CABINET	**NTR-1 1/2** **NCR-1 1/2** **NBR-1 1/2** 1 1/2" RAILS IN PLACE OF STD 1 3/4" NARROW RAIL INCREASES THE DOOR OPENING MAKES CABINET OPENING TALLER - DOORS WILL BE TALLER **NTR-1 3/4** **NCR-1 3/4** **NBR-1 3/4** 1 3/4" RAIL INSTEAD OF 3 1/2" RAIL	135 135 135 135 135 135 135	EA EA EA EA EA EA EA
REDUCE HEIGHT OF FARM SINK TOP RAIL 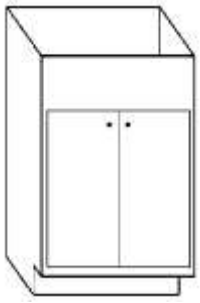	**FARM SINK RTR** REDUCE THE HEIGHT OF THE TOP RAIL ON A FARM SINK THE DOORS OVERLAY THE TOP RAIL 1/2" ON STANDARD OVERLAY AND 1/2" ON FULL OVERLAY	450	PC

CABINET MODIFICATIONS

BOX OPTIONS

EXTEND SIDES DOWN TO BOTTOM OF STILE	**WABREX**	150	PC
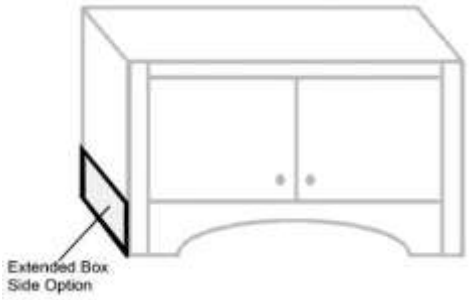	THIS MODIFICATION IS ONLY USED FOR WABR CABINETS		
FALSE BACK IN CABINET	**FALSE BACK**	600	EA
	CUSTOM DEPTH DRAWER REQUIRING A FALSE BACK THIS APPLIES TO A BASE, OFFICE, TALL, OR VANITY CABINET WITH DRAWERS IF YOU WANT DIFFERENT DEPTH DRAWER THAN THE DEPTH OF THE CABINET. HEIGHT OF FALSE BACK WILL VARY DEPENDING ON THE CABINET		
	FALSE BACK-TD	600	EA
	FALSE BACK BEHIND TOP DRAWER SECTION ONLY FOR COUNTERTOP OUTLET USE - OUTLET NOT INCLUDED ONLY AVAILABLE ON 24" DEEP CABINETS. FALSE BACK IS SET AT 18", LEAVING APPROXIMATELY A 6" SPACE BEHIND IT. FALSE BACK WILL BE 8" TALL DRAWER WILL BE EQUIVALENT TO AN 18" DEEP CABINET.		
EXTENDED SIDES BACK	BASES		
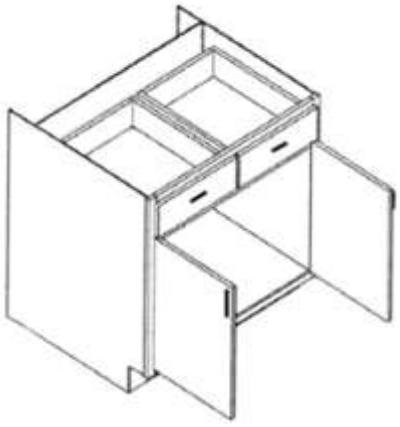	**BASEES-L**	450	EA
	BASEES-R	450	EA
	BASEES-B	900	EA
	VANITIES		
	VANITYES-L	450	EA
	VANITYES-R	450	EA
	VANITYES-B	900	EA
	WALLS		
	WALLES-L	450	EA
	WALLES-R	450	EA
	WALLES-B	900	EA
	TALLS		
	TALLES-L	450	EA
	TALLES-R	450	EA
	TALLES-B	900	EA
	N/A OVER 12" DEEPER THAN CABINET		
FACE FRAME AND DOORS ONLY	**FFD**	60%	
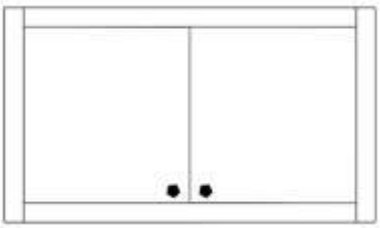	60% OF CABINET LIST MAXIMUM CABINET CHARGE APPLIES WILL HAVE DADOED STILES AND RAILS		

CABINET OPTIONS

CLIPPED CORNER 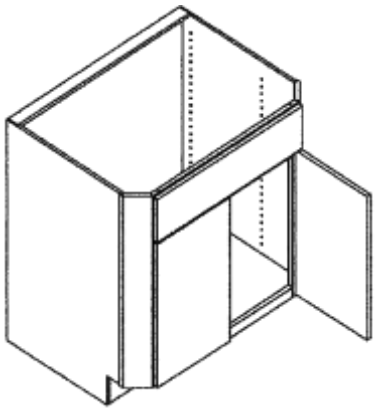	**CLIPCRN3-L**	765	EA
	CLIPCRN3-R	765	EA
	CLIPCRN3-B	1530	EA
	CLIPCRN6-L	765	EA
	CLIPCRN6-R	765	EA
	CLIPCRN6-B	1530	EA
	3" OR 6" CLIP - PER SIDE		
	AVAILABLE ON BASES, VANITIES, WALLS, AND TALLS		
	OVERALL WIDTH OF CABINET WILL INCREASE BY 3" OR 6" FOR EACH CLIPPED CORNER		
	POCKET DOORS N/A ON CABINETS WITH CLIPPED CORNERS		
	N/A ON ANGLE CABINETS SUCH AS WD, BER, ETC.		
	ADDS 3" OR 6" PER CLIP TO CABINET WIDTH		
	NOT AVAILABLE ON CABINETS OVER 48" TALL OR 96" TALL		
ADD FLUTES 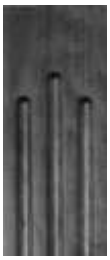 	**ADD FLUTES**	255	EA
	28 1/2", 30", 30 1/2", 36", 42", 48", & 60" - FLUTES RUN 3" FROM TOP AND 3" FROM BOTTOM		
	32 1/2", 34 1/2", 84", 90", 93", & 96" - FLUTES RUN 3" FROM TOP AND 6" FROM BOTTOM		
	3" FLUTED FILLERS - 3 FLUTES		
	6" FLUTED FILLERS - 5 FLUTES		
	FLUTES WILL BE CENTERED FROM THE SIDES		
FULL DEPTH SHELF 	**FDS**	54	PC
	PRICE IS PER CABINET		
ADDITIONAL SHELF 	**ADD SHELF**	150	PS
	PRICE IS PER SHELF		

CABINET MODIFICATIONS

CABINET OPTIONS

FLUSH TOE KICK	**FTK-3**	102	EA
	1 1/2" REVEAL ON MOD FULL OVERLAY		
3" FLUSH TOE KICK	2 1/2" REVEAL ON STD OVERLAY		
	FTK-5.75	102	EA
	4 1/4" REVEAL ON FULL OVERLAY		
5 3/4" FLUSH TOE	5 1/4" REVEAL ON STD OVERLAY		
	3" OR 5 3/4" FLUSH TOE KICK		
	BASES, PANTRIES, & VANITIES		
CABINET WITH NO TOE KICK	**NO TOE KICK**	102	EA
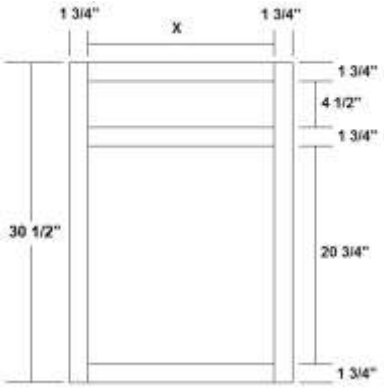	AVAILABLE ON BASE, VANITY, OFFICE, AND TALL CABINETS		
	CABINET WILL BE 4" SHORTER		
RECESSED TOE KICK	**RECESSTK-L**	384	EA
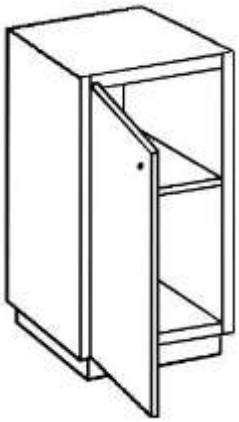	**RECESSTK-R**	384	EA
	RECESSTK-BACK	384	EA
	RECESSTK-FRONT	384	EA
	RECESSTK-FRONT IS ONLY AVAILABLE ON CABINETS THAT HAVE A 5 3/4" FLUSH TOE		
	RECESSED TOE KICK ON SIDE OF CABINET - PER SIDE		

CABINET OPTIONS

LOOSE TOE KICK 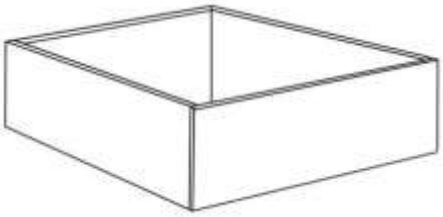 4" TALL	**LOOSE TOE** LOOSE TOE KICK WILL BE FLUSH WITH THE BACK AND SIDES OF THE CABINET AND RECESS IN 3" ON FRONT OF CABINET. UNFINISHED IF FINISHED TOE KICK IS NEEDED SEE PAGE **335** IF FINISHED END IS NEEDED SEE PAGE **279**	0.01	EA
LOOSE FLUSH TOE KICK 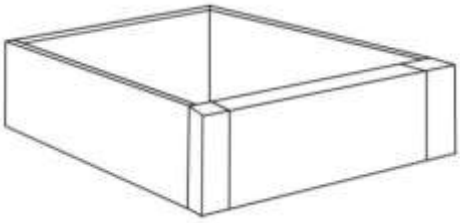	**FTK-1.25 LOOSE** **FTK-4 LOOSE** LOOSE TOE KICK WILL BE FLUSH WITH CABINET ON ALL FOUR SIDES UNFINISHED IF FINISHED TOE KICK IS NEEDED SEE PAGE **335** IF FINISHED END IS NEEDED SEE PAGE **279**	102 102	EA EA
VALANCE TOE KICK  AVAL-TK 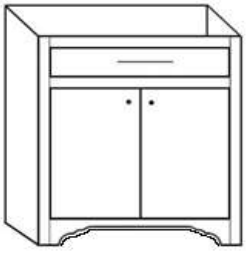 CVAL-TK	5 3/4", ARCHED OR COUNTRY, VALANCE TOE KICK ARCHED VALANCE TOE KICK **AVAL-TK** COUNTRY VALANCE TOE KICK **CVAL-TK** WITH COVE EDGE BOTTOM - N/A LESS THAN 4" TALL VALANCE TOE KICK FOR BASE, VANITY, TALL CABINETS, AND TALL BOOKCASES A RECESSED TOEKICK IS INSTALLED 3" BEHIND THE BASE, VANITY, AND TALL CABINETS - NOT FINISHED	435 510	EA EA
PREP CABINET FOR FEET 	**PREP FOR FEET** Prep for feet is a blocking that flushes with the frame and cabinet side, to allow attachment of the deco foot. Will recess toe kick back 5" - Blocking is 4 1/4" X 4 1/4"	300	PC

CABINET MODIFICATIONS

CABINET MODIFICATIONS

CABINET PARTITIONS	**PARTITION-W**	384	EA
	ADD PARTITION IN WALL CABINET		
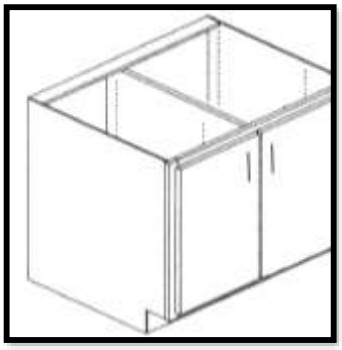	**PARTITION-B**	486	EA
	ADD PARTITION IN BASE CABINET		
	PARTITION-O	486	EA
	ADD PARTITION IN OFFICE CABINET		
	PARTITION-V	486	EA
	ADD PARTITION IN VANITY CABINET		
	PARTITION-P	639	EA
	ADD PARTITION IN PANTRY CABINET		
UNLESS SPECIFIED, CABINET WILL HAVE FULL DEPTH SHELF	CABINET PARTITION IS 3/4" MATERIAL		
PANTRY WALK THRU INSWING MOD	**WALKTHRU INSWING**	750	EA
	THIS CHANGES THE HINGE SWING		
	THE DOORS WILL SWING IN INSTEAD OF OUT.		
	DOORS WILL STILL OVERLAY THE FRAME ON THE SIDES.		
BOOKCASE MOD FOR 3" FLUSH TOE KICK	**BKMOD-3**	102	EA
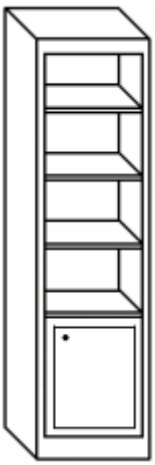	FOR WHEN 3" FLUSH TOE KICK IS REQUIRED INSTEAD OF 5 3/4"		

CABINET MODIFICATIONS

CABINET OPTIONS

FINISHED INTERIOR 	**FIW36** WALLS 36" TALL AND SHORTER	894	EA
	FIW48 WALLS LARGER THAN 36" TALL	1149	EA
	FIB BASES OR VANITIES	894	EA
	FIP36 PANTRIES 36" WIDE AND LESS X 24" DEEP X 96" TALL	1785	EA
	FIP42 PANTRIES OVER 36" WIDE	2325	EA
	FINISHED INTERIOR IS NOT AVAILABLE ON CABINETS OVER 96" TALL		
	STD BACK STAIN STANDARD BACK PANEL WITH A DIFFERENT STAIN THAN CABINET ON BACK WALL ONLY	1200	EA
FINISHED WALL CABINET BOTTOM  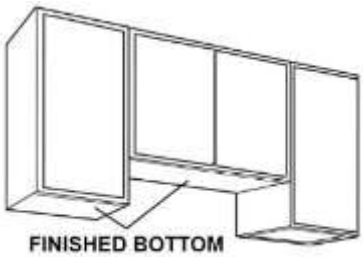 FINISHED BOTTOM	**FINISH BOTTOM** INCLUDES 1/4" BOTTOM FINISHED CAB SKIN INCLUDES PREP BOTTOM CABINETS SIDES & BACK ARE 1/4" SHORTER SKIN IS APPLIED TO BOTTOM BEHIND FRAME IF CABINET HAS FINISHED ENDS THEY WILL COVER THE ENDS OF THE FINISHED BOTTOM BOTTOM DADO IN FRONT STILE WILL BE EXPOSED	450	EA
PREP BOTTOM OF CABINET 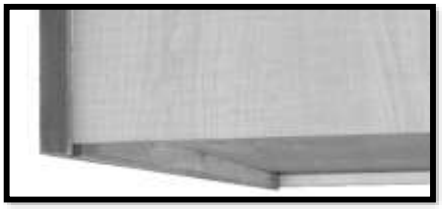	**PREP BOTTOM** THIS MOD IS TO BE USED IF YOU ARE ADDING A SKIN TO THE BOTTOM OF THE CABINET ON SITE DOES NOT INCLUDE SKIN, IF SKIN IS NEEDED, ORDER SEPERATELY SIDES AND BACK OF CABINET WILL BE 1/4" SHORTER SO SKIN CAN BE APPLIED IN FIELD	150	EA
PINHOLE FILLING ON WINE CUBBIES 	**WINECUBBIEFILL-L**	150	EA
	WINECUBBIEFILL-R PINHOLES ON SIDE OF CABINET WILL BE FILLED IN	150	EA

CABINET MODIFICATIONS

CABINET OPTIONS

BEAD BOARD BACK PANEL	**BEAD BACK**	900	EA
	BEAD BOARD BACK PANEL		
	BEAD BACK STAIN	1500	EA
	BEAD BOARD BACK PANEL WITH A DIFFERENT STAIN THAN CAB		
	ON BACK WALL ONLY		
	ONLY AVAILABLE WITH FINISHED INTERIOR OPTION		
BER EXTENSION	**BERMOD-R**	300	PI
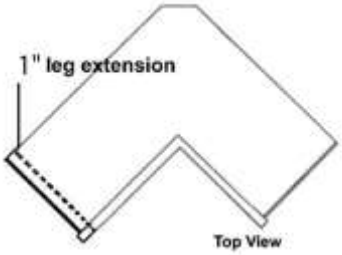	**BERMOD-L**	300	PI
	PRICE IS PER INCH		
	EXTENSION ON BASE EASY REACH UNIT		
	CAN BE INCREASED IN 1" INCREMENTS		
	MINIMUM EXTENSION IS 1" - MAXIMUM EXTENSION IS 6"		
	WARRANTY WILL BE VOID IF NOT HINGED ON SIDE OF LARGE DOOR		
	ON BER CABINETS ONLY		
	CABINET CAN BE DECREASED. PUT INFORMATION IN NOTES		
WER EXTENSION	**WERMOD-R**	300	PI
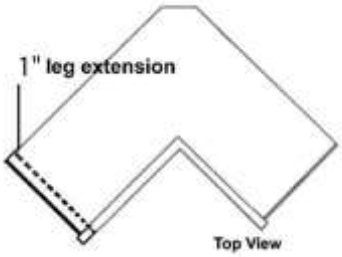	**WERMOD-L**	300	PI
	PRICE IS PER INCH		
	EXTENSION ON WALL EASY REACH UNIT		
	CAN BE INCREASED IN 1" INCREMENTS		
	MINIMUM EXTENSION IS 1" - MAXIMUM EXTENSION IS 6"		
	WARRANTY WILL BE VOID IF NOT HINGED ON SIDE OF LARGE DOOR		
	ON WER CABINETS ONLY		
	CABINET CAN BE DECREASED. PUT INFORMATION IN NOTES		
FINISH BLIND OPENING	**FBLIND-1/4**	255	EA
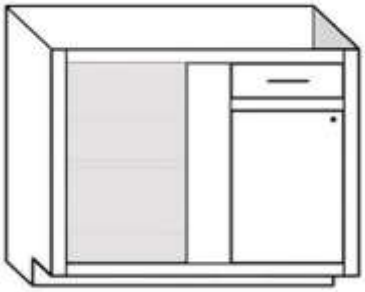	**FBLIND-3/4**	600	EA
	1/4" CLASSIC SKIN PLACED BEHIND BLIND SECTION OF CABINET		
	3/4" VENEER PLY TO FILL IN ENTIRE BLIND AREA, FINISHED TO MATCH CABINET		

CABINET MODIFICATIONS

CABINET OPTIONS

WINE BOTTLE RACK	**S9230**	1350	EA
	18" WINE BOTTLE RACK - 3 BOTTLES		
	S9220	1425	EA
	24" WINE BOTTLE RACK - 5 BOTTLES		
	S9210	1500	EA
	30" WINE BOTTLE RACK - 7 BOTTLES		
	S9200	1800	EA
	48" WINE BOTTLE RACK - 11 BOTTLES		
	ADD ROW	450	LF
	ADDITIONAL ROW OF BOTTLE RACK		
	NO MODIFICATIONS		
	INCLUDES FINISHED INTERIOR & ONE ROW OF RACK		
	WINE CRADLES WILL HAVE A SHELF UNDER EACH ROW		
	WINE RACK WILL SET BACK 2" ON 15" DEEP AND DEEPER CABINETS. CABINETS LESS THAN 15" DEEP WILL NOT ACCOMMODATE DOORS, AS THE BOTTLE NECK WILL PROTUDE PAST THE FRAME.		
N/A IN WHITE OAK			
PLATE DISPLAY RACK	**NPD-30**	1950	EA
	30"		
	NPD-36	1950	EA
	36"		
	INCLUDES FINISHED INTERIOR		
	INSTALLED, 11 3/4" OPENING - PRE-ASSEMBLED PLATE DISPLAY		
	PRE-ASSEMBLED PLATE DISPLAY		
	DOWELS 3/8" DIAMETER, SPACED 2" ON CENTER		
	PLATE RACK SITS BACK 2 1/2" FROM RAIL		
N/A IN WHITE OAK OR RIFT WHITE OAK	**CENTER 3 DOWELS ARE REMOVABLE FOR EASY CLEANING**		
	NO MODIFICATIONS		
ROUTED WINE RACK LATTICE	**WR1729**	1785	EA
	17" X 29" WINE LATTICE OPENING - 11 BOTTLES		
	WR1736	1785	EA
	17" X 36" WINE LATTICE OPENING - 14 BOTTLES		
	WR2430	1785	EA
	24" X 30" WINE LATTICE OPENING - 18 BOTTLES		
	WR2443	3570	EA
	24" X 43" WINE LATTICE OPENING - 28 BOTTLES		
	***INCLUDES FINISHED INTERIOR**		
N/A IN WHITE OAK OR RIFT WHITE OAK	4" X 4" OPENINGS		
STEM GLASS HOLDER - 12" DEEP	**SW30**	720	EA
	3-011-*__-0002		
	30" STEMWARE HOLDER		
	FITS A 30" WIDE X 12" DEEP CABINET		
	SW36	720	EA
	3-011-*__-0003		
	36" STEMWARE HOLDER		
	FITS A 36" WIDE X 12" DEEP CABINET		
	SWSPEC	288	SF
	USE FOR ANY CUSTOM SIZE - PER SQUARE FOOT		
N/A IN WHITE OAK	62" IS MAXIMUM WIDTH		

CABINET MODIFICATIONS

CABINET OPTIONS

BLOCKING 	**BLOCKING** BLOCKING MATERIAL THAT RUNS ACROSS FRONT AND BACK	150	PC
WALL DESK ORGANIZER MODIFICATION 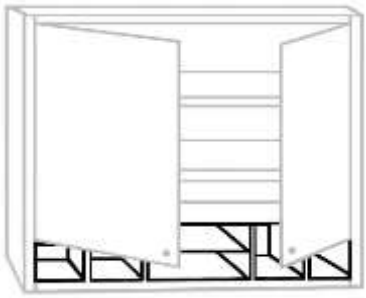	**WDO-MOD** WALL DESK ORGANIZER MODIFICATION THERE IS AN UP-CHARGE FOR MODIFICATIONS OF ORGANIZER SPECS	750	EA
WALL DESK ORGANIZER WITH HINGED DRAWER 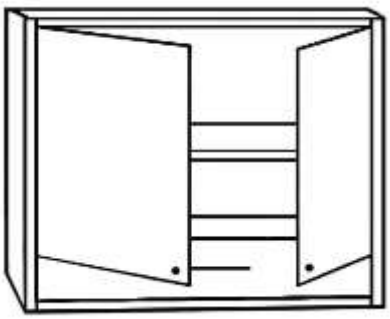	**WDO-HDDF** WALL DESK ORGANIZER WITH HINGED DRAWER AVAILABLE ON 6" AND 10"	600	EA
WALL DESK ORGANIZER WITH FULL HEIGHT DOOR 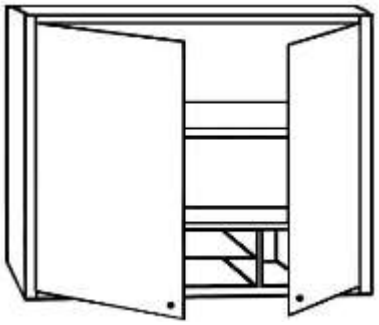	**WDO-FHD** WALL DESK ORGANIZER WITH FULL HEIGHT DOOR AVAILABLE ON 6" AND 10"	255	DR

CABINET OPTIONS

FRONT ANGLED CABINETS

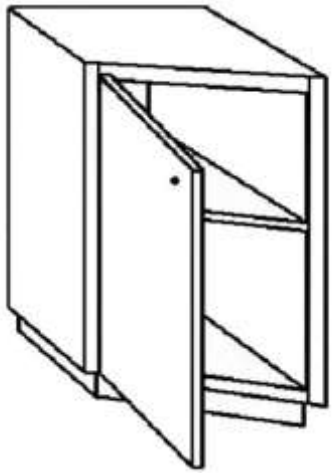

A-FLS, A-FRS, A-LSIN, AND A-RSIN ARE
NOT AVAILABLE IN CABINETS WITH DRAWERS

A-FLS-T, A-FRS-T, A-LSIN-T, AND A-RSIN-T ARE
NOT AVAILABLE IN CABINETS WITH DRAWERS

A 45 DEGREE ANGLE IS THE LARGEST THAT CAN BE DONE

BASES, OFFICE, VANITIES, AND WALLS:		
A-FLS	1860	EA
ANGLE FRONT IN TO LEFT SIDE OF CABINET		
A-FRS	1860	EA
ANGLE FRONT IN TO RIGHT SIDE OF CABINET		
A-LSIN	1860	EA
ANGLE LEFT SIDE IN TO BACK OF CABINET		
A-RSIN	1860	EA
ANGLE RIGHT SIDE IN TO BACK OF CABINET		
A-LSOUT	1860	EA
ANGLE LEFT SIDE OUT TO BACK OF CABINET		
A-RSOUT	1860	EA
ANGLE RIGHT SIDE OUT TO BACK OF CABINET		
PANTRIES & LINENS		
A-FLS-T	2550	EA
ANGLE FRONT IN TO LEFT SIDE OF CABINET		
A-FRS-T	2550	EA
ANGLE FRONT IN TO RIGHT SIDE OF CABINET		
A-LSIN-T	2550	EA
ANGLE LEFT SIDE IN TO BACK OF CABINET		
A-RSIN-T	2550	EA
ANGLE RIGHT SIDE IN TO BACK OF CABINET		
A-LSOUT-T	2550	EA
ANGLE LEFT SIDE OUT TO BACK OF CABINET		
A-RSOUT-T	2550	EA
ANGLE RIGHT SIDE OUT TO BACK OF CABINET		

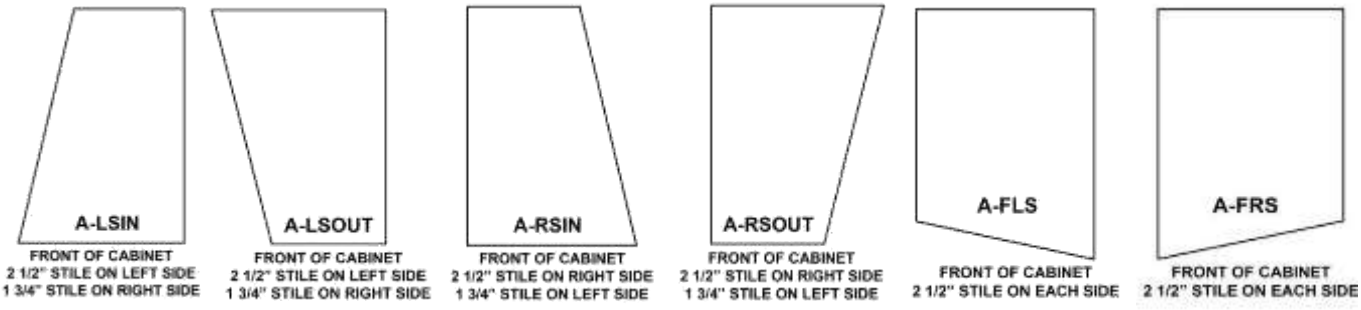

BACK ANGLED CABINETS

NOT AVAILABLE IN CABINETS WITH DRAWERS

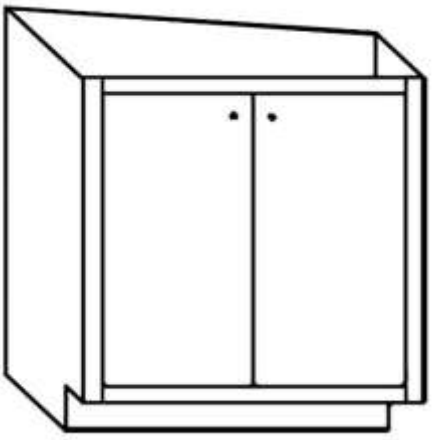

BASES, OFFICE, VANITIES, AND WALLS:		
A-BLS	1860	EA
ANGLE BACK IN TO LEFT SIDE OF CABINET		
A-BRS	1860	EA
ANGLE BACK IN TO RIGHT SIDE OF CABINET		
PANTRIES & LINENS		
A-BLS-T	2550	EA
ANGLE BACK IN TO LEFT SIDE OF CABINET		
A-BRS-T	2550	EA
ANGLE BACK IN TO RIGHT SIDE OF CABINET		

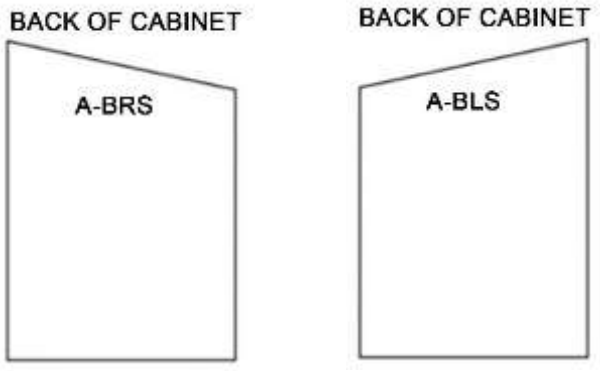

ORDERS FOR ANGLED CABINETS WILL NOT BE PUT IN TO PRODUCTION UNLESS A DETAILED DRAWING ACCOMPANIES ORDER

CABINET BOX MODIFICATIONS

CUSTOM INCREASE SPECIFICATIONS

WE BUILD TO 1/4" INCREMENTS ONLY - OVER 12" MODIFICATION PLEASE SEND IN FOR A QUOTE
BASE, OFFICE, VANITY, WALL, & TALL CABINETS N/A OVER 30" DEEP AND LESS THAN 8" WIDE
CABINETS NOT AVAILABLE OVER 75" WIDE

BASE, OFFICE, WALL & VANITY CUSTOM SIZE INCREASE			
CI-W	INCREASE WIDTH	375	EA
CI-H	INCREASE HEIGHT	600	EA
CI-D	INCREASE DEPTH OF CABINETS W/OUT DRAWERS	600	EA
CI-D-FB	INCREASE DEPTH OF CABINETS W/DRAWERS	1200	EA
	ADDS A FALSE BACK TO CABINET WHEN OVER 24" DEEP		
TALL CUSTOM SIZE INCREASE			
N/A AVAILABLE OVER 45" WIDE, 27" DEEP, OR 108" TALL			
BOOKCASES AND FINISHED INTERIOR N/A OVER 96" TALL			
CIT-W	INCREASE WIDTH OF TALL CABINETS	600	EA
CIT-H	INCREASE HEIGHT OF TALL CABINETS	975	EA
CIT-D	INCREASE DEPTH OF TALL CABINETS W/O DRAWERS	975	EA
CIT-D-FB	INCREASE DEPTH OF PANTRY AND LINEN CABINETS W/DRAWERS	1575	EA
	ADDS A FALSE BACK TO CABINET WHEN OVER 24" DEEP		

When a cabinet with a drawer is increased in depth over 24" deep, the drawer will not increase. It will stay standard depth of 24" cabinet and will have a false back.

CUSTOM DEPTH REDUCTION SPECIFICATIONS

WE BUILD TO 1/4" INCREMENTS ONLY

TO ACCOMMODATE DRAWER GUIDES CABINETS WITH A DRAWER CAN ONLY HAVE A REDUCED DEPTH TO 12", 15", 18", OR 21"

BASE, OFFICE, VANITY, AND TALL CABINETS WITH FHD N/A LESS THAN 6" DEEP
WALL CABINETS N/A LESS THAN 4" DEEP AND BASE CABINETS N/A LESS THAN 6" DEEP

WALL, BASE, OFFICE, & VANITY CUSTOM SIZE REDUCTION			
CR-W	REDUCE WIDTH	225	EA
CR-H	REDUCE HEIGHT	405	EA
CR-D	REDUCE DEPTH - See notes above for custom depth cabinet w/drawers	405	EA
CR-VU18	REDUCE VANITY DEPTH FROM 21" TO 18"	0.01	EA
TALL CUSTOM REDUCTION			
CRT-W	REDUCE WIDTH OF TALL CABINETS	450	EA
CRT-H	REDUCE HEIGHT OF TALL CABINETS	675	EA
CRT-D	REDUCE DEPTH - See notes above for custom depth cabinet w/drawers	675	EA
CR-LU18	REDUCE LINEN DEPTH FROM 21" TO 18"	0.01	EA

ADA MODIFICATIONS - ONLY AVAILABLE ON PROJECTS

ADA HEIGHT	BASE, OFFICE, & VANITY CABINET HEIGHT 32 1/2" TALL	0.01	EA
ADA TOEKICK	BASE, OFFICE, VANITY, & TALL CABINET TOE KICK DIMENSIONS 8 1/2" TALL X 6" DEEP	0.01	EA

FRAME MODIFICATIONS

OPENING CHANGES			
OPENING CHANGE W	WALLS - CHANGE OPENING SIZES	405	PC
OPENING CHANGE B	BASES/OFFICE/VANITIES - CHANGE OPENING SIZES	510	PC
OPENING CHANGE P	PANTRIES/LINEN - CHANGE OPENING SIZES	630	PC

DIAGONAL WALL CABINET MODIFICATIONS

WDMOD	WD CABINET MODIFICATION	900	PC
	DRAWING MUST ACCOMPANY MODIFICATION REQUEST		

PANEL MODIFICATIONS

CUSTOM QUOTE BY CABINET OFFICE REQUIRED FOR INCREASE OR REDUCTION ON INTERGRATED RAISED END PANELS			
END PANEL CUSTOM SIZE INCREASE			
PI-H	INCREASE HEIGHT	150	EA
PI-D	INCREASE DEPTH	150	EA
END PANEL CUSTOM SIZE REDUCTION			
PR-H	REDUCE HEIGHT	75	EA
PR-D	REDUCE DEPTH	75	EA
WAINSCOT CUSTOM STILES & RAILS			
STILE MODIFIED FROM 2 5/8" TO 3 5/8"			
WAINSCOT-MODS-3C		255	EA
WAINSCOT-MODS-3L		255	EA
WAINSCOT-MODS-3R		255	EA
STILE MODIFIED FROM 2 5/8" TO 5 3/4"			
WAINSCOT-MODS-5C		255	EA
WAINSCOT-MODS-5L		255	EA
WAINSCOT-MODS-5R		255	EA
TOP RAIL MODIFIED FROM 3 7/8" TO 5 3/4"			
WAINSCOT-MOD5-TR		255	EA
BOTTOM RAIL MODIFIED FROM 5 3/4" TO 3 7/8"			
WAINSCOT-MOD3-BR		255	EA
FINISH BACK SIDE OF WAINSCOT PANEL			
WAINSCOTFIN-BACK		750	EA

LOCKER CABINET MODIFICATIONS

CR-W-WLC	**REDUCE WIDTH OF WALL LOCKER CABINETS**	225	EA
CR-W-BLC	**REDUCE WIDTH OF BASE LOCKER CABINETS**	225	EA
CR-D-WLC	**REDUCE DEPTH OF WALL LOCKER CABINETS**	225	EA
CR-D-BLC	**REDUCE DEPTH OF BASE LOCKER CABINETS**	225	EA

STANISCI HOOD MOLDING MODIFICATIONS

FOR S SERIES HOODS ON PAGES 141

STANISCI-BASIC		3	EA
STANISCI-SIMPLE		3	EA

STANISCI HOOD HEIGHT REDUCTION MODIFICATION

FOR 30" HOODS AND TALLER - HOODS ON PAGES 142

STANISCI-HOOD-RH	**REDUCE HEIGHT OF STANISCI HOODS**	405	EA

NOTES OR ADDITIONS

FILLERS

FILLERS ARE FINISHED ON THE FACE. LONG EDGES AND ENDS WILL BE STAINED OR PAINTED ONLY AND MAY HAVE MILLING MARKS. IF EDGES AND ENDS NEED A SANDED FINISH THEY WILL REQUIRE AN UPCHARGE

WALL CORNER FILLERS
BASE CORNER FILLER

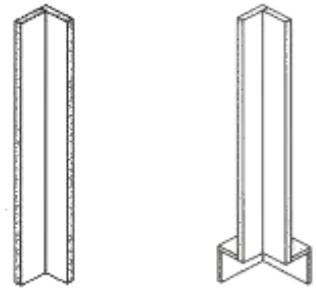

WALL BASE-RTK
NO WIDTH MODIFICATIONS

WALL			
WCF-15	3" X 3" X 15" X 3/4" WALL CORNER FILLER	216	EA
WCF-18	3" X 3" X 18" X 3/4" WALL CORNER FILLER	216	EA
WCF-21	3" X 3" X 21" X 3/4" WALL CORNER FILLER	216	EA
WCF-24	3" X 3" X 24" X 3/4" WALL CORNER FILLER	234	EA
WCF-27	3" X 3" X 27" X 3/4" WALL CORNER FILLER	234	EA
WCF-30	3" X 3" X 30" X 3/4" WALL CORNER FILLER	234	EA
WCF-33	3" X 3" X 33" X 3/4" WALL CORNER FILLER	255	EA
WCF-36	3" X 3" X 36" X 3/4" WALL CORNER FILLER	255	EA
WCF-39	3" X 3" X 39" X 3/4" WALL CORNER FILLER	255	EA
WCF-42	3" X 3" X 42" X 3/4" WALL CORNER FILLER	273	EA
WCF-48	3" X 3" X 48" X 3/4" WALL CORNER FILLER	273	EA
BASE			
BCF-34 1/2RTK	3/4" X 3" X 3" X 34 1/2" BASE W/RECESSED TOE KICK	312	EA
BCF-34 1/2FT	3/4" X 3" X 3" X 34 1/2" BASE W/FLUSH TOE KICK	312	EA

FILLERS - 3"



RIFT WHITE OAK FILLERS WILL BE CONSTRUCTED FROM PLYWOOD AND EDGEBANDED ON TWO LONG EDGES

F-3X30 1/2	3/4" X 3" X 30 1/2" FILLER	78	EA
F-3X36	3/4" X 3" X 36" FILLER	78	EA
F-3X39	3/4" X 3" X 39" FILLER	99	EA
F-3X42	3/4" X 3" X 42" FILLER	99	EA
F-3X48	3/4" X 3" X 48" FILLER	117	EA
F-3X60	3/4" X 3" X 60" FILLER	138	EA
F-3X84	3/4" X 3" X 84" FILLER	312	EA
F-3X90	3/4" X 3" X 90" FILLER	312	EA
F-3X93	3/4" X 3" X 93" FILLER (AVAILABILITY LIMITED)	312	EA
F-3X96	3/4" X 3" X 96" FILLER (AVAILABILITY LIMITED)	312	EA
F-3X102	3/4" X 3" X 102" FILLER (AVAILABILITY LIMITED)	390	EA
F-3X108	3/4" X 3" X 108" FILLER (AVAILABILITY LIMITED)	465	EA
ANYTHING OVER 108" CAN BE QUOTED IN ENGINEERED WOOD ONLY			
SF-EDGE60	TO SAND FINISH 30" TO 60" FILLERS - PER EDGE	45	PE
SF-EDGE96	TO SAND FINISH 84" to 96" FILLERS - PER EDGE	75	PE
SF-END	TO SAND FINISH ENDS - CHARGE IS FOR BOTH ENDS	45	EA

ANGLED FILLERS - 3"

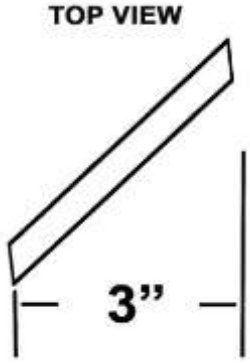

RIGHT FILLER SHOWN

AF-3X30L	3/4" X 3" X 30" ANGLED FILLER	372	EA
AF-3X30R	3/4" X 3" X 30" ANGLED FILLER	372	EA
AF-3X30 1/2L	3/4" X 3" X 30 1/2" ANGLED FILLER	372	EA
AF-3X30 1/2R	3/4" X 3" X 30 1/2" ANGLED FILLER	372	EA
AF-3X34 1/2L	3/4" X 3" X 34 1/2" ANGLED FILLER	372	EA
AF-3X34 1/2R	3/4" X 3" X 34 1/2" ANGLED FILLER	372	EA
AF-3X36L	3/4" X 3" X 36" ANGLED FILLER	372	EA
AF-3X36R	3/4" X 3" X 36" ANGLED FILLER	372	EA
AF-3X39L	3/4" X 3" X 39" ANGLED FILLER	390	EA
AF-3X39R	3/4" X 3" X 39" ANGLED FILLER	390	EA
AF-3X42L	3/4" X 3" X 42" ANGLED FILLER	390	EA
AF-3X42R	3/4" X 3" X 42" ANGLED FILLER	390	EA
AF-3X48L	3/4" X 3" X 48" ANGLED FILLER	411	EA
AF-3X48R	3/4" X 3" X 48" ANGLED FILLER	411	EA
AF-3X60L	3/4" X 3" X 60" ANGLED FILLER	429	EA
AF-3X60R	3/4" X 3" X 60" ANGLED FILLER	429	EA
AF-3X84L	3/4" X 3" X 84" ANGLED FILLER	606	EA
AF-3X84R	3/4" X 3" X 84" ANGLED FILLER	606	EA
AF-3X90L	3/4" X 3" X 90" ANGLED FILLER	606	EA
AF-3X90R	3/4" X 3" X 90" ANGLED FILLER	606	EA
AF-3X93L	3/4" X 3" X 93" ANGLED FILLER (AVAILABILITY LIMITED)	606	EA
AF-3X93R	3/4" X 3" X 93" ANGLED FILLER (AVAILABILITY LIMITED)	606	EA
AF-3X96L	3/4" X 3" X 96" ANGLED FILLER (AVAILABILITY LIMITED)	606	EA
AF-3X96R	3/4" X 3" X 96" ANGLED FILLER (AVAILABILITY LIMITED)	606	EA
MUST SPECIFY ANGLE IF DIFFERENT THAN 45 DEGREE ANGLE AND PROVIDE DRAWING			
SF-EDGE60	TO SAND FINISH 30" TO 60" FILLERS - PER EDGE	45	PE
SF-EDGE96	TO SAND FINISH 84" to 96" FILLERS - PER EDGE	75	PE
SF-END	TO SAND FINISH ENDS - CHARGE IS FOR BOTH ENDS	45	EA

ACCESSORIES

FILLERS

FILLERS ARE FINISHED ON THE FACE. LONG EDGES AND ENDS WILL BE STAINED OR PAINTED ONLY AND MAY HAVE MILLING MARKS. IF EDGES AND ENDS NEED A SANDED FINISH THEY WILL REQUIRE AN UPCHARGE

FILLERS - 6"



RIFT WHITE OAK FILLERS WILL BE CONSTRUCTED FROM PLYWOOD AND EDGEBANDED ON TWO LONG EDGES

F-6X30 1/2	3/4" X 6" X 30 1/2" FILLER	156	EA
F-6X36	3/4" X 6" X 36" FILLER	156	EA
F-6X39	3/4" X 6" X 39" FILLER	177	EA
F-6X42	3/4" X 6" X 42" FILLER	177	EA
F-6X48	3/4" X 6" X 48" FILLER	195	EA
F-6X60	3/4" X 6" X 60" FILLER	216	EA
F-6X84	3/4" X 6" X 84" FILLER	489	EA
F-6X90	3/4" X 6" X 90" FILLER	489	EA
F-6X93	3/4" X 6" X 93" FILLER (AVAILABILITY LIMITED)	489	EA
F-6X96	3/4" X 6" X 96" FILLER (AVAILABILITY LIMITED)	489	EA
F-6X102	3/4" X 6" X 102" FILLER (AVAILABILITY LIMITED)	525	EA
F-6X108	3/4" X 6" X 108" FILLER (AVAILABILITY LIMITED)	585	EA
	ANYTHING OVER 108" CAN BE QUOTED IN ENGINEERED WOOD ONLY		
ADDPROFILE	ADD PROFILE TO FILLER	195	EA
	MITER DOORS WILL HAVE A SHAKER EDGE UNLESS SPECIFIED DIFFERENTLY		
SF-EDGE60	TO SAND FINISH 30" TO 60" FILLERS - PER EDGE	45	PE
SF-EDGE96	TO SAND FINISH 84" to 96" FILLERS - PER EDGE	75	PE
SF-END	TO SAND FINISH ENDS - CHARGE IS FOR BOTH ENDS	45	EA

RANDOM LENGTH FILLERS



RANDOM LENGTH BETWEEN 85"-95" LONG

CAN NOT SPECIFY LENGTH

F-3X85-95RL	3/4" X 3" X 85" T0 95" FILLER	255	EA
F-6X85-95RL	3/4" X 6" X 85" T0 95" FILLER	390	EA
EDGEPROFILE	ADD PROFILE TO ONE LONG EDGE	195	EA
	MITER DOORS WILL HAVE A SHAKER EDGE UNLESS SPECIFIED DIFFERENTLY		
SF-EDGE96	TO SAND FINISH 85" to 96" FILLERS - PER EDGE	75	EA
SF-END	TO SAND FINISH ENDS - CHARGE IS FOR BOTH ENDS	45	EA

ACCESSORIES

FILLERS

OVERLAY FILLERS ARE FINISHED ON PROFILED EDGE ONLY

2 1/2" OVERLAY FILLER (2 1/4" FINISHED SIZE) PROFILED ON ALL FOUR EDGES MITER DOORS WILL HAVE A SHAKER EDGE UNLESS SPECIFIED DIFFERENTLY 	**OVLF-21/2X101/2**	OVERLAY FILLER FOR 12" TALL WALL	237	EA
	OVLF-21/2X121/2	OVERLAY FILLER FOR 14" TALL WALL	237	EA
	OVLF-21/2X131/2	OVERLAY FILLER FOR 15" TALL WALL	237	EA
	OVLF-21/2X161/2	OVERLAY FILLER FOR 18" TALL WALL	258	EA
	OVLF-21/2X191/2	OVERLAY FILLER FOR 21" TALL WALL	276	EA
	OVLF-21/2X221/2	OVERLAY FILLER FOR 24" TALL WALL	297	EA
	OVLF-21/2X251/2	OVERLAY FILLER FOR 27" TALL WALL	315	EA
	OVLF-21/2X281/2	OVERLAY FILLER FOR 30" TALL WALL	336	EA
	OVLF-21/2X341/2	OVERLAY FILLER FOR 36" TALL WALL	336	EA
	OVLF-21/2X371/2	OVERLAY FILLER FOR 39" TALL WALL	336	EA
	OVLF-21/2X401/2	OVERLAY FILLER FOR 42" TALL WALL	336	EA
	OVLF-21/2X461/2	OVERLAY FILLER FOR 48" TALL WALL	354	EA
	OVLF-21/2X521/2	OVERLAY FILLER FOR 54" TALL WALL	354	EA
	OVLF-21/2X581/2	OVERLAY FILLER FOR 60" TALL WALL	354	EA
	OVLF-21/2X251/2	OVERLAY FILLER FOR 30" TALL OFFICE	315	EA
	OVLF-21/2X28	OVERLAY FILLER FOR 32 1/2" TALL VANITIES (STD & FHD)	315	EA
	OVLF-21/2X30	OVERLAY FILLER FOR 34 1/2" BASES (STD & FHD)	336	EA
	OVLF-21/2X781/2	OVERLAY FILLER FOR 84" TALL PANTRIES & LINEN CLOSETS	744	EA
	OVLF-21/2X841/2	OVERLAY FILLER FOR 90" TALL PANTRIES & LINEN CLOSETS	744	EA
	OVLF-21/2X871/2	OVERLAY FILLER FOR 93" TALL OVEN CABINETS	744	EA
	OVLF-21/2X901/2	OVERLAY FILLER FOR 96" TALL OVEN CABINETS	744	EA
3 1/2" OVERLAY FILLER (3 3/8" FINISHED SIZE) PROFILED ONE LONG EDGE & BOTH ENDS MITER DOORS WILL HAVE A SHAKER EDGE UNLESS SPECIFIED DIFFERENTLY 	**OVLF-31/2X101/2**	OVERLAY FILLER FOR 12" TALL WALL	156	EA
	OVLF-31/2X121/2	OVERLAY FILLER FOR 14" TALL WALL	156	EA
	OVLF-31/2X131/2	OVERLAY FILLER FOR 15" TALL WALL	156	EA
	OVLF-31/2X161/2	OVERLAY FILLER FOR 18" TALL WALL	177	EA
	OVLF-31/2X191/2	OVERLAY FILLER FOR 21" TALL WALL	195	EA
	OVLF-31/2X221/2	OVERLAY FILLER FOR 24" TALL WALL	216	EA
	OVLF-31/2X251/2	OVERLAY FILLER FOR 27" TALL WALL	234	EA
	OVLF-31/2X281/2	OVERLAY FILLER FOR 30" TALL WALL	255	EA
	OVLF-31/2X341/2	OVERLAY FILLER FOR 36" TALL WALL	255	EA
	OVLF-31/2X371/2	OVERLAY FILLER FOR 39" TALL WALL	255	EA
	OVLF-31/2X401/2	OVERLAY FILLER FOR 42" TALL WALL	255	EA
	OVLF-31/2X461/2	OVERLAY FILLER FOR 48" TALL WALL	273	EA
	OVLF-31/2X521/2	OVERLAY FILLER FOR 54" TALL WALL	273	EA
	OVLF-31/2X581/2	OVERLAY FILLER FOR 60" TALL WALL	273	EA
	OVLF-31/2X251/2	OVERLAY FILLER FOR 30" TALL OFFICE	234	EA
	OVLF-31/2X28	OVERLAY FILLER FOR 32 1/2" VANITIES (STD & FHD)	255	EA
	OVLF-31/2X30	OVERLAY FILLER FOR 34 1/2" BASES (STD & FHD)	255	EA
	OVLF-31/2X781/2	OVERLAY FILLER FOR 84" TALL OVEN CABINETS	663	EA
	OVLF-31/2X841/2	OVERLAY FILLER FOR 90" TALL OVEN CABINETS	663	EA
	OVLF-31/2X871/2	OVERLAY FILLER FOR 93" TALL OVEN CABINETS	663	EA
	OVLF-31/2X901/2	OVERLAY FILLER FOR 96" TALL OVEN CABINETS	663	EA
6" OVERLAY FILLER (5 3/4" FINISHED SIZE) PROFILED ON ALL FOUR EDGES MITER DOORS WILL HAVE A SHAKER EDGE UNLESS SPECIFIED DIFFERENTLY 	**OVLF-6X101/2**	OVERLAY FILLER FOR 12" TALL WALL	312	EA
	OVLF-6X121/2	OVERLAY FILLER FOR 14" TALL WALL	312	EA
	OVLF-6X131/2	OVERLAY FILLER FOR 15" TALL WALL	312	EA
	OVLF-6X161/2	OVERLAY FILLER FOR 18" TALL WALL	333	EA
	OVLF-6X191/2	OVERLAY FILLER FOR 21" TALL WALL	351	EA
	OVLF-6X221/2	OVERLAY FILLER FOR 24" TALL WALL	372	EA
	OVLF-6X251/2	OVERLAY FILLER FOR 27" TALL WALL	390	EA
	OVLF-6X281/2	OVERLAY FILLER FOR 30" TALL WALL	411	EA
	OVLF-6X341/2	OVERLAY FILLER FOR 36" TALL WALL	411	EA
	OVLF-6X371/2	OVERLAY FILLER FOR 39" TALL WALL	411	EA
	OVLF-6X401/2	OVERLAY FILLER FOR 42" TALL WALL	411	EA
	OVLF-6X461/2	OVERLAY FILLER FOR 48" TALL WALL	429	EA
	OVLF-6X521/2	OVERLAY FILLER FOR 54" TALL WALL	429	EA
	OVLF-6X581/2	OVERLAY FILLER FOR 60" TALL WALL	429	EA
	OVLF-6X251/2	OVERLAY FILLER FOR 30" TALL OFFICE	390	EA
	OVLF-6X28	OVERLAY FILLER FOR 32 1/2" TALL VANITIES (STD & FHD)	390	EA
	OVLF-6X30	OVERLAY FILLER FOR 34 1/2" BASES (STD & FHD)	411	EA
	OVLF-6X781/2	OVERLAY FILLER FOR 84" TALL PANTRIES & LINEN CLOSETS	819	EA
	OVLF-6X841/2	OVERLAY FILLER FOR 90" TALL PANTRIES & LINEN CLOSETS	819	EA
	OVLF-6X871/2	OVERLAY FILLER FOR 93" TALL OVEN CABINETS	819	EA
	OVLF-6X901/2	OVERLAY FILLER FOR 96" TALL OVEN CABINETS	819	EA

MISCELLANEOUS MATERIAL

CABINET MATERIAL



4 X 8 MAPLE
PRINT SHEETS

CLASSIC CAB MATERIAL			
CCABMATERIAL-1/8	1/8" 4 X 8 SHEET	147	EA
CCABMATERIAL-1/4	1/4" 4 X 8 SHEET	255	EA
CCABMATERIAL-1/2	1/2" 4 X 8 SHEET	300	EA
CCABMATERIAL-3/4	3/4" 4 X 8 SHEET	450	EA
IMPERIAL CAB MATERIAL			
ICABMATERIAL-1/4	1/4" 4 X 8 SHEET - MADE WITH ENGINEERED WOOD	255	EA
ICABMATERIAL-1/2	1/2" 4 X 8 SHEET	300	EA
ICABMATERIAL-3/4	3/4" 4 X 8 SHEET	450	EA

DOOR MATERIAL

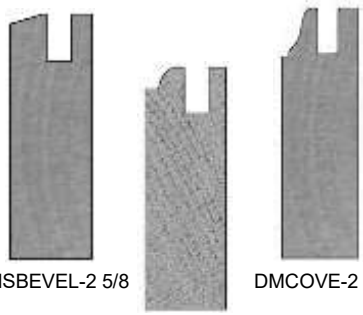

DMSBEVEL-2 5/8 DMBEAD- 2 5/8 DMCOVE-2 5/8

DMSBEVEL-2 5/8	3/4" X 2 5/8" X 96"	255	EA
DMSBEVEL-3 5/8	3/4" X 3 5/8" X 96"	255	EA
DMBEAD-2 5/8	3/4" X 2 5/8" X 96"	300	EA
DMCOVE-2 5/8	3/4" X 2 5/8" X 96"	300	EA
	DMCOVE-2 5/8 IS AVAILABLE IN BEECH, BIRCH, CHERRY, MAPLE & WHITE OAK ONLY		
	OUTSIDE PROFILE WILL BE SHAKER		
	OTHER PROFILES NOT AVAILABLE		

MITER DOOR MATERIAL



DM6093

DM6093-2 1/2	3/4" X 2 1/2" X 96"	345	EA
	REGENCY AND RIDGEGATE MATERIAL		
	ONLY AVAILABLE IN BIRCH		
		345	EA

FACE FRAME MATERIAL

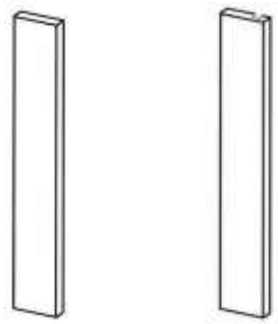

SOLID DADO

SOLID FACE FRAME MATERIAL			
FFMATERIAL-13/4	3/4" X 1 3/4" X 96"	357	EA
FFMATERIAL-31/2	3/4" X 3 1/2" X 96"	387	EA
DADOED FACE FRAME MATERIAL			
FFDMATERIAL-13/4	3/4" X 1 3/4" X 96"	357	EA
FFDMATERIAL-31/2	3/4" X 3 1/2" X 96"	387	EA

ACCESSORIES

VALANCES - FINISHED ON BOTH SIDES

STRAIGHT VALANCE	**STVAL36**	36 1/4" STRAIGHT VALANCE	183	EA
	STVAL42	42 1/4" STRAIGHT VALANCE	213	EA
	STVAL48	48 1/4" STRAIGHT VALANCE (CANNOT BE INCREASE TO 12" TALL)	246	EA
	STVAL54	54 1/4" STRAIGHT VALANCE (CANNOT BE INCREASE TO 12" TALL)	276	EA
	STVAL60	60 1/4" STRAIGHT VALANCE (CANNOT BE INCREASE TO 12" TALL)	306	EA
	**STVAL72**	72 1/4" STRAIGHT VALANCE (CANNOT BE INCREASE TO 12" TALL)	366	EA
	VALMODH	**MOD TO INCREASE HEIGHT OF VALANCE UP TO 12" TALL**	405	EA
	VALMODWD	**MOD TO DECREASE WIDTH OF VALANCE**	225	EA
6" TALL				
		WILL HAVE SAME EDGE PROFILE ON		
		BOTTOM AS CABINET DOORS		
COUNTRY VALANCE	**CVAL36**	36 1/4" COUNTRY VALANCE - 3" TRIM ON EACH SIDE	606	EA
	CVAL42	42 1/4" COUNTRY VALANCE - 3" TRIM ON EACH SIDE	618	EA
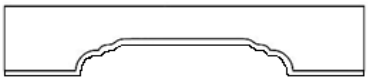	**CVAL48**	48 1/4" COUNTRY VALANCE - 3" TRIM ON EACH SIDE	705	EA
	CVAL54	54 1/4" COUNTRY VALANCE - 3" TRIM ON EACH SIDE	795	EA
	CVAL60	60 1/4" COUNTRY VALANCE - 3" TRIM ON EACH SIDE	843	EA
	CVAL72	72 1/4" COUNTRY VALANCE - 3" TRIM ON EACH SIDE	921	EA
6" TALL		WITH COVE EDGE BOTTOM - N/A LESS THAN 4" TALL		
ARCH MEASUREMENT DOES NOT CHANGE	**VALMODH**	**MOD TO INCREASE HEIGHT OF VALANCE UP T0 12" TALL**	405	EA
WHEN THERE IS HEIGHT INCREASE	**VALMODWD**	**MOD TO DECREASE WIDTH OF VALANCE**	225	EA
WINDOW VALANCE	**WVAL36**	36 1/4" WINDOW VALANCE - 3" TRIM ON EACH SIDE	750	EA
	WVAL42	42 1/4" WINDOW VALANCE - 3" TRIM ON EACH SIDE	750	EA
	**WVAL48**	48 1/4" WINDOW VALANCE - 3" TRIM ON EACH SIDE	900	EA
	WVAL54	54 1/4" WINDOW VALANCE - 3" TRIM ON EACH SIDE	1050	EA
	WVAL60	60 1/4" WINDOW VALANCE - 3" TRIM ON EACH SIDE	1125	EA
	WVAL72	72 1/4" WINDOW VALANCE - 3" TRIM ON EACH SIDE	1200	EA
8" TALL				
		WITH COVE EDGE BOTTOM - N/A LESS THAN 8" TALL		
CUSTOM SIZES AVAILABLE				
ARCH MEASUREMENT DOES NOT CHANGE	**VALMODH**	**MOD TO INCREASE HEIGHT OF VALANCE UP T0 12" TALL**	405	EA
WHEN THERE IS HEIGHT INCREASE	**VALMODWD**	**MOD TO DECREASE WIDTH OF VALANCE**	225	EA
ARCHED VALANCE	**AVAL36**	36 1/4" ARCHED VALANCE - 3" TRIM ON EACH SIDE	459	EA
	AVAL42	42 1/4" ARCHED VALANCE - 3" TRIM ON EACH SIDE	486	EA
	AVAL48	48 1/4" ARCHED VALANCE - 3" TRIM ON EACH SIDE	510	EA
	**AVAL54**	54 1/4" ARCHED VALANCE - 3" TRIM ON EACH SIDE	537	EA
	AVAL60	60 1/4" ARCHED VALANCE - 3" TRIM ON EACH SIDE	561	EA
	AVAL72	72 1/4" ARCHED VALANCE - 3" TRIM ON EACH SIDE	639	EA
		N/A LESS THAN 6" TALL		
ARCHES UP 2 3/4"				
6" TALL	**VALMODH**	**MOD TO INCREASE HEIGHT OF VALANCE UP TO 12"**	405	EA
	VALMODWD	**MOD TO DECREASE WIDTH OF VALANCE**	225	EA
		STANDARD EDGE WILL BE A 3/8" ROUND OVER EDGE		
CUSTOM SIZES AVAILABLE				
	AVALEDGE- 4348	ARCHED VALANCE WITH A 4348 EDGE	300	EA
ARCH MEASUREMENT DOES NOT CHANGE	**AVALEDGE-SHKR**	ARCHED VALANCE WITH A SHAKER EDGE	300	EA
WHEN THERE IS HEIGHT INCREASE				
ARCHED VALANCE COMBO	**AVALCOMBO36**	36 1/4" ARCHED VALANCE & ONE 50" LONG STRAIGHT VALANCE	729	EA
	AVALCOMBO42	42 1/4" ARCHED VALANCE & ONE 50" LONG STRAIGHT VALANCE	756	EA
	AVALCOMBO48	48 1/4" ARCHED VALANCE & ONE 50" LONG STRAIGHT VALANCE	780	EA
	**AVALCOMBO54**	54 1/4" ARCHED VALANCE & ONE 50" LONG STRAIGHT VALANCE	807	EA
	AVALCOMBO60	60 1/4" ARCHED VALANCE & ONE 50" LONG STRAIGHT VALANCE	831	EA
	AVALCOMBO72	72 1/4" ARCHED VALANCE & ONE 50" LONG STRAIGHT VALANCE	909	EA
ARCHES UP 2 3/4"				
6" TALL				
3" TRIM ON EACH SIDE		**VALANCES WILL HAVE A CR2 EDGE (SPECIAL 3/8" ROUND OVER EDGE)**		
	**VALCOMBOMODH**	**MOD TO INCREASE HEIGHT OF VALANCE UP TO 12"**	600	EA
	VALCOMBOMODWD	**MOD TO DECREASE WIDTH OF VALANCE**	225	EA
		ARCH MEASUREMENT DOES NOT CHANGE		
6" TALL		WHEN THERE IS HEIGHT INCREASE		

VALANCES - FINISHED ON BOTH SIDES

RAISED PANEL VALANCE	**RPVAL36**	36 1/4" RAISED PANEL VALANCE - 8" TALL-3 1/2" STILES	675	EA
	RPVAL42	42 1/4" RAISED PANEL VALANCE - 8" TALL-3 1/2" STILES	750	EA
	RPVAL48	48 1/4" RAISED PANEL VALANCE - 8" TALL-3 1/2 STILES	840	EA
	RPVAL54	54 1/4" RAISED PANEL VALANCE - 8" TALL-3 1/2" STILES 3 PANELS	975	EA
	RPVAL60	60 1/4" RAISED PANEL VALANCE - 8" TALL-3 12" STILES 3 PANELS	1050	EA
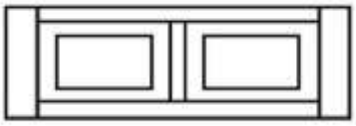 **RPVAL36**	**VALPNLMODH**	**MOD TO INCREASE HEIGHT OF VALANCE**	750	EA
	VALPNLMODWD	**MOD TO DECREASE WIDTH OF VALANCE**	405	EA
	VALPNLMODWI	**MOD TO INCREASE WIDTH OF VALANCE**	405	EA
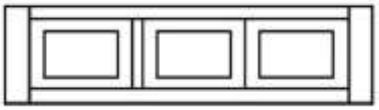 **RPVAL54**		SHAKER EDGE PROFILE		
		N/A IN RIFT WHITE OAK OR WHITE OAK		
FLAT PANEL VALANCE	**SHKRVAL36**	36 1/4" FLAT PANEL VALANCE - 8" TALL - 3 1/2" STILES	675	EA
	SHKRVAL42	42 1/4" FLAT PANEL VALANCE - 8" TALL - 3 1/2" STILES	750	EA
	SHKRVAL48	48 1/4" FLAT PANEL VALANCE - 8" TALL - 3 1/2" STILES	840	EA
	SHKRVAL54	54 1/4" FLAT PANEL VALANCE - 8" TALL - 3 1/2" STILES 3 PANELS	975	EA
	SHKRVAL60	60 1/4" FLAT PANEL VALANCE - 8" TALL - 3 1/2" STILES 3 PANELS	1050	EA
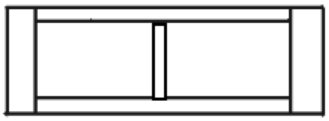 **SHKRVAL36**		SHAKER EDGE PROFILE		
		N/A LESS THAN 8" TALL		
	VALPNLMODH	**MOD TO INCREASE HEIGHT OF VALANCE**	750	EA
	VALPNLMODWD	**MOD TO DECREASE WIDTH OF VALANCE**	405	EA
	VALPNLMODWI	**MOD TO INCREASE WIDTH OF VALANCE**	405	EA
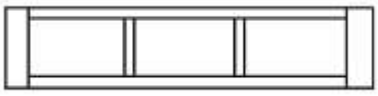 **SHKRVAL54**				
DUSTCOVERS	**DUSTCOVER36**	1/2" FIN PLYWOOD DUSTCOVER	153	EA
	DUSTCOVER42	1/2" FIN PLYWOOD DUSTCOVER	180	EA
	DUSTCOVER48	1/2" FIN PLYWOOD DUSTCOVER	204	EA
	DUSTCOVER54	1/2" FIN PLYWOOD DUSTCOVER	231	EA
	DUSTCOVER60	1/2" FIN PLYWOOD DUSTCOVER	255	EA
	DUSTCOVER72	1/2" FIN PLYWOOD DUSTCOVER	276	EA
1/2"  11 1/4" DEEP		FITS BEHIND VALANCE		
		FOR OVER THE SINK APPLICATIONS		
		WILL ONLY BE FINISHED ON BOTTOM SIDE		
TOE VALANCE - PROFILED - 4" TALL	**STRAIGHT**			
	TVS12	11 1/2" x 4" x 3/4"	390	EA
	TVS24	23 1/2" x 4" x 3/4"	414	EA
	TVS36	35 1/2" x 4" x 3/4"	483	EA
	TVS48	47 1/2" x 4" x 3/4"	546	EA
	TVS60	59 1/2" x 4" x 3/4"	606	EA
 4" TALL				
	ARCHED			
	TVA12	11 1/2" x 4" x 3/4"	576	EA
	TVA24	23 1/2" x 4" x 3/4"	660	EA
	TVA36	35 1/2" x 4" x 3/4"	759	EA
	TVA48	47 1/2" x 4" x 3/4"	810	EA
	TVA60	59 1/2" x 4" x 3/4"	861	EA
 4" TALL ARCHES UP 2"		PROFILED ON TOP, AND BOTH SIDES TO MATCH OUTSIDE EDGE OF DOOR		
ARCH MEASUREMENT DOES NOT CHANGE WHEN THERE IS HEIGHT INCREASE		FINISHED ON ALL SIDES		
	VALPNLMODH	**MOD TO INCREASE HEIGHT OF VALANCE**	750	EA
	VALPNLMODWD	**MOD TO DECREASE WIDTH OF VALANCE**	405	EA

ACCESSORIES

WHAT NOT SHELVES

BASE WHAT NOT	**BWHAT NOTL**	THREE SHELVES	1680	EA
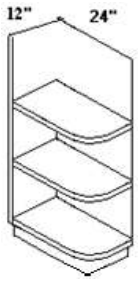	**BWHAT NOTR**	THREE SHELVES	1680	EA
		12" X 24" X 34 1/2"		
LEFT WHAT NOT PICTURED				
VANITY WHAT NOT	**VWHAT NOTL**	THREE SHELVES	1326	EA
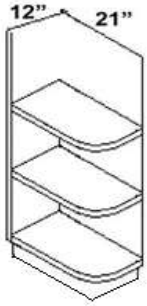	**VWHAT NOTR**	THREE SHELVES	1326	EA
		12" X 21" X 32 1/2"		
LEFT WHAT NOT PICTURED				
WALL WHAT NOT W/RADIUS SHELVES		**6" WIDE**		
	WWN-6X12X30RSL	THREE SHELVES	996	EA
	WWN-6X12X30RSR	THREE SHELVES	996	EA
	WWN-6X12X36RSL	FOUR SHELVES	1122	EA
	WWN-6X12X36RSR	FOUR SHELVES	1122	EA
	WWN-6X12X39RSL	FOUR SHELVES	1140	EA
	WWN-6X12X39RSR	FOUR SHELVES	1140	EA
	WWN-6X12X42RSL	FIVE SHELVES	1170	EA
	WWN-6X12X42RSR	FIVE SHELVES	1170	EA
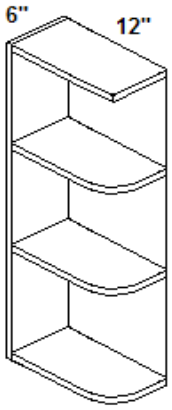		**9" WIDE**		
	WWN-9X12X30RSL	THREE SHELVES	1146	EA
	WWN-9X12X30RSR	THREE SHELVES	1146	EA
	WWN-9X12X36RSL	FOUR SHELVES	1275	EA
	WWN-9X12X36RSR	FOUR SHELVES	1275	EA
	WWN-9X12X39RSL	FOUR SHELVES	1320	EA
	WWN-9X12X39RSR	FOUR SHELVES	1320	EA
	WWN-9X12X42RSL	FIVE SHELVES	1410	EA
	WWN-9X12X42RSR	FIVE SHELVES	1410	EA
LEFT WHAT NOT PICTURED				

WHAT NOT SHELVES

WALL WHAT NOT W/CLIPPED SHELVES

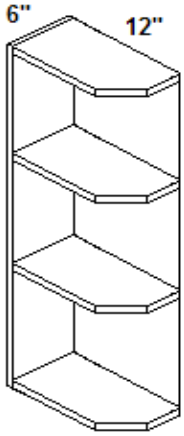

LEFT WHAT NOT PICTURED

6" WIDE			
WWN-6X12X30CSL	THREE SHELVES	1140	EA
WWN-6X12X30CSR	THREE SHELVES	1140	EA
WWN-6X12X36CSL	FOUR SHELVES	1275	EA
WWN-6X12X36CSR	FOUR SHELVES	1275	EA
WWN-6X12X39CSL	FOUR SHELVES	1305	EA
WWN-6X12X39CSR	FOUR SHELVES	1305	EA
WWN-6X12X42CSL	FIVE SHELVES	1335	EA
WWN-6X12X42CSR	FIVE SHELVES	1335	EA
9" WIDE			
WWN-9X12X30CSL	THREE SHELVES	1410	EA
WWN-9X12X30CSR	THREE SHELVES	1410	EA
WWN-9X12X36CSL	FOUR SHELVES	1530	EA
WWN-9X12X36CSR	FOUR SHELVES	1530	EA
WWN-9X12X39CSL	FOUR SHELVES	1590	EA
WWN-9X12X39CSR	FOUR SHELVES	1590	EA
WWN-9X12X42CSL	FIVE SHELVES	1650	EA
WWN-9X12X42CSR	FIVE SHELVES	1650	EA

WALL WHAT NOT W/DIAGONAL SHELVES

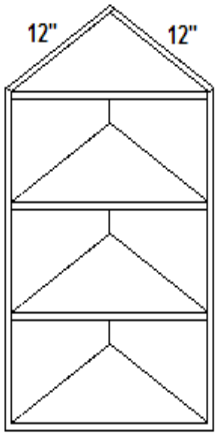

12" WIDE			
WWN-12X12X30DS	THREE SHELVES	1140	EA
WWN-12X12X36DS	FOUR SHELVES	1275	EA
WWN-12X12X39DS	FOUR SHELVES	1290	EA
WWN-12X12X42DS	FIVE SHELVES	1320	EA

ACCESSORIES

MISCELLANEOUS

*ADD PRODUCTS TO PRICE OF CABINET

12" DEEP APPLIANCE GARAGE CORNER	**AG100-C**	1500	EA
	APPLIANCE GARAGE OF SOLID WOOD TAMBOUR DOOR, SOLID WOOD FRAME		
	END PANELS ARE VENEER FACED & BACKED ON 3/8" MDF		
	ARCHON WOODWORKS SPRING TENSION TRACK SYSTEM SMOOTH, NON-BINDING OPERATION		
	SENT UNASSEMBLED		
	NO MODIFICATIONS		
12" DEEP APPLIANCE GARAGE STRAIGHT	**AG100-S-18**	1650	EA
	18"		
	AG100-S-24	1650	EA
	24"		
	STRAIGHT SOLID WOOD DOOR - FINISHED ENDS STANDARD		
	CUSTOM SIZES NOT AVAILABLE - SENT UNASSEMBLED		
WOOD TOP 1 1/2"	**WOOD TOP-1 1/2**	153	SF
	1 1/2" TOP		
	WTMF		NC
	MOLDING ON FRONT		
	WTMR		NC
	MOLDING ON RIGHT		
	WTML		NC
	MOLDING ON LEFT		
	WTMB		NC
	MOLDING ON BACK		
	WTNM		NC
	NO MOLDING		
	1 1/2" WOOD TOP WITH 1 1/2" MOLDING ATTACHED		
	USE CODES TO SPECIFY EDGES THAT NEED MOLDING APPLIED		
	IF BOTTOM NEEDS FINISHED - CONTACT CUSTOMER SERVICE		
	UP TO 96" LONG IS ONE PIECE - NOT AVAILABLE OVER 96"		
	MAX DEPTH OF 30"		
	TWO TOPS SIDE BY SIDE WILL NOT HAVE MATCHING GRAIN AND MAY HAVE A SLIGHT COLOR VARIATION		
	NOT RESPONSIBLE FOR JOINERY BEYOND 96"		
WOODTOP CLIP CORNER	**WOODTOP CLIP**	450	EA
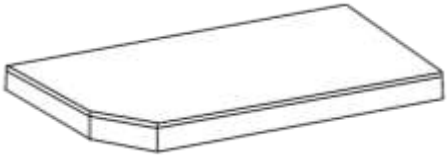			

MISCELLANEOUS

BASE SINK FLOOR	**BSF-FLOOR24**	120	EA
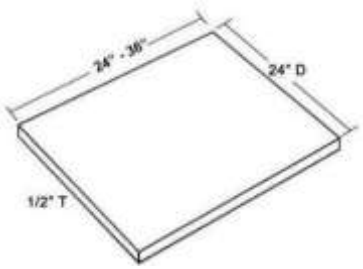	**BSF-FLOOR27**	135	EA
	BSF-FLOOR30	150	EA
	BSF-FLOOR33	165	EA
	BSF-FLOOR36	180	EA
	FOR A BSF24 THRU BSF36		
BASE CORNER SINK FLOOR	**BCSF-FLOOR36DIA**	180	EA
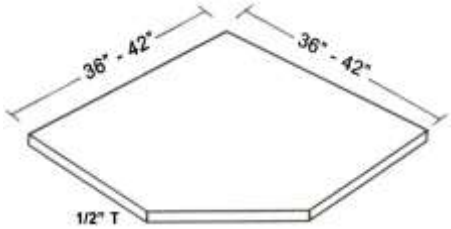	**BCSF-FLOOR39DIA**	225	EA
	BCSF-FLOOR42DIA	270	EA
	FOR A BSF36DIAL, BSF36DIAR, BSF39DIA-2B, & BSF42DIA-2B		
CLOSET ROD	**ROD18**	300	EA
	EXPANDS TO 30"		
	ROD30	300	EA
	EXPANDS TO 48"		
	ROD48	300	EA
	EXPANDS TO 72"		
	ROD72	300	EA
	EXPANDS TO 120" - Includes one center hanger		
	ROD96	300	EA
	EXPANDS TO 144" - Includes two center hangers		
ZINC COATED STEEL ROD AND CENTER HANGER ADJ LENGTH ROD WITH END FLANGES FIXED TO ROD	DIMENSIONS - 1 1/2" DEEP X 2 9/16" HIGH BY SELECTED LENGTH		

ACCESSORIES

SHELVES

3/4" SHELVING

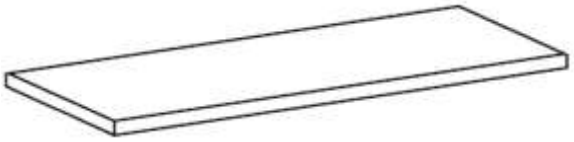

SHELVING

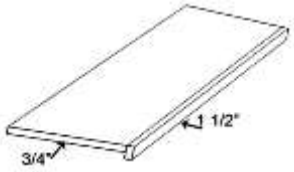

FINISHED SHELVING W/MOLDING

CLASSIC SHELVING	26	SF
3/4" PARTICLE BOARD SHELF LAMINATED ON TWO SIDES		
EDGEBANDING ON ONE LONG SIDE		
UP TO 96" IN LENGTH - MAX DEPTH 24"		
IMPERIAL SHELVING	29	SF
3/4" PLYWOOD SHELF LAMINATED ON TWO SIDES		
EDGEBANDING ON ONE LONG SIDE		
UP TO 96" IN LENGTH - MAX DEPTH 24"		
FIN SHELVING	78	SF
3/4" FINISHED PLYWOOD SHELF FINISHED ON TWO SIDES		
EDGEBANDING ON ONE LONG SIDE		
UP TO 96" IN LENGTH - MAX DEPTH 24"		
FINISHED ON BOTH SIDES		
MOLDFIN SHELVING	165	SF
3/4" FINISHED SHELVING WITH 1 1/2" FINISHED MOLDING APPLIED		
UP TO 96" IN LENGTH - MAX DEPTH 24"		
ATTACHED TO FRONT SIDE ONLY		
FINISHED ON BOTH SIDES		

1 1/2" SHELF MOLDING

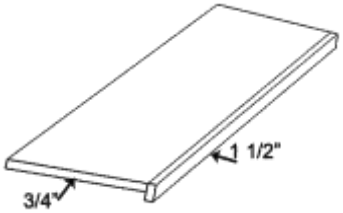

MOLDING ONLY-SHELF NOT INCLUDED

MOFS	225	PS
1 1/2" MOLDING FOR FINISHED SHELF		
PRICED PER SHELF		
DOES NOT INCLUDE PRICE OF SHELF		
ATTACHED TO FINISHED SHELF OF BOOKCASE		
OR OTHER FINISHED INTERIOR CABINET		
*TO ORDER THE MOLDING LOOSE, REFER TO MOLDINGS SECTION (COUNTEREDGE)		

FLOATING SHELF



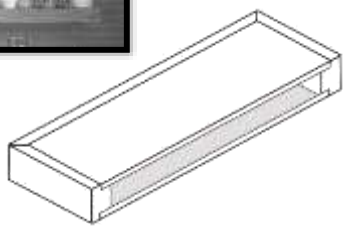

FLOATING SHELF SLIDES ONTO THE MOUNTING BRACKET. THE MOUNTING BRACKET IS SHORTER TO ALLOW FOR SHIFTING (LEFT OR RIGHT) OF THE FLOATING SHELF.



THE WALL ATTACHMENT HAS METAL BRACKETS. THE NUMBER OF METAL BRACKETS WILL VARY ACCORDING TO SIZE.

FS-FINFRONT	210	LF
FINISHED ON FRONT		
FS-FINFRONTFINL	252	LF
FINISHED ON FRONT AND LEFT SIDE		
FS-FINFRONTFINR	252	LF
FINISHED ON FRONT AND RIGHT SIDE		
FS-FINFRONTFINB	285	LF
FINISHED ON FRONT AND BOTH ENDS		
2 1/2" TALL X 10" DEEP X UP TO 96" LONG		
N/A OVER 96" LONG, OVER 12" DEEP, OR LESS THAN 6" DEEP		
FSDEPTH-12	405	EA
TO INCREASE DEPTH TO 12"		
FSDEPTH-8	0.01	EA
TO DECREASE DEPTH TO 8"		
FSDEPTH-6	0.01	EA
TO DECREASE DEPTH TO 6"		
N/A LESS THAN 12" LONG - HARDWARE INCLUDED		
KOCH AND COMPANY IS NOT RESPONSIBLE FOR ANY DAMAGES THAT OCCUR IF THE SHELF FALLS DOWN. WE CAN NOT CONTROL INSTALLATION, OR THE AMOUNT OF WEIGHT THAT IS PLACED ON THE SHELF, AND ARE NOT RESPONSIBLE FOR DETERMINING THE WEIGHT LOADING CAPACITY OF ANY SHELF.		
DESIGNED TO BE A DECORATION SHELF OR FOR KNICK KNACKS		
NOT DESIGNED TO BE USED FOR DISHES		
WHEN A RUSTIC SPECIES IS ORDERED THE SHELVES WILL		
BE CLEAR BUT MAY HAVE SOME RUSTIC QUALITIES		

MISCELLANEOUS

FALSE FRONT DRAWER BRACKET 	**FFBRACKET**	3	EA
	USED TO ATTACH FALSE FRONT		
5PC DRAWER FRONT BRACKET 	**5PC-DFB**	12	EA
DOVETAIL DWR-LOOSE  UP TO 36" WIDE AND 22" DEEP	**DTBOXGSM-3 1/2**	231	EA
	DTBOXGSM-5	231	EA
	DTBOXGSM-7 1/2	231	EA
	INCLUDES 3/4 EXT SIDEMOUNT GUIDES		
	DTBOXBG-3 1/2	456	EA
	DTBOXBG-5	456	EA
	DTBOXBG-7 1/2	456	EA
	INCLUDES 7/8 UNDERMOUNT GUIDE		
	DTBOXUMFE-3 1/2	513	EA
	DTBOXUMFE-5	513	EA
	DTBOXUMFE-7 1/2	513	EA
	DTBOXUMFE-10 1/2	513	EA
	INCLUDES UMFE GUIDES		
DOVETAIL DRAWER BOX MATERIAL 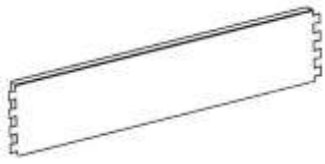	**DTMATERIAL-3 1/2**	105	EA
	DTMATERIAL-5	150	EA
	DTMATERIAL-7 1/2	195	EA
	96" LONG		
	DTMATERIAL-10 1/2	240	EA
	MAXIMUM LENGTH IS 37"		
CLASSIC DRAWER BOX MATERIAL 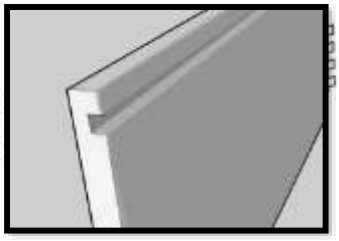	**CLMATERIAL-3 1/2**	75	EA
	CLMATERIAL-5 1/2	105	EA
	CLMATERIAL-7 1/2	135	EA
	CLMATERIAL-10 1/2	165	EA
	96" LONG		

ACCESSORIES

LOOSE ROLLOUTS

ROLLOUTS - N/A LESS THAN 15" DEEP, OR OVER 39" WIDE. N/A IN CABINETS WITH CLIPPED CORNERS.

LOOSE ROSK WITH 3 1/2" TALL ROLLOUTS  EACH ROLLOUT SOLD SEPARATELY	**ROSK-3 1/2-LOOSE** DRAWER BOX, ROLLOUTS AND TRACK WILL MATCH PER ORDER TRACK WEIGHT RATING OF 75 LBS ROLLOUT DRAWERS 3 1/2" TALL N/A IN CABINETS OVER 39" WIDE, OR LESS THAN 15" DEEP, OR LESS THAN 15" WIDE. DOES NOT INCLUDE POSTS INCLUDES DRAWER TRACK WILL BE LOOSE - MUST BE INSTALLED ON SITE INCLUDES DRAWER SLIDE SPACERS AND GUIDES	325	EA
LOOSE ROSK WITH 5" TALL ROLLOUTS  EACH ROLLOUT SOLD SEPARATELY	**ROSK-5-LOOSE** DRAWER BOX, ROLLOUTS AND TRACK WILL MATCH PER ORDER TRACK WEIGHT RATING OF 75 LBS ROLLOUT DRAWERS 5" TALL N/A IN CABINETS OVER 39" WIDE, OR LESS THAN 15" DEEP, OR LESS THAN 15" WIDE. DOES NOT INCLUDE POSTS INCLUDES DRAWER TRACK WILL BE LOOSE - MUST BE INSTALLED ON SITE INCLUDES DRAWER SLIDE SPACERS AND GUIDES	400	EA
POSTS FOR ROSK 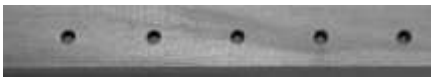	**ROSK-BASEPOST** INCLUDES 4 BASE ROLLOUT POSTS W/PEG HOLES & 8 SCREWS POST WILL BE 17" LONG **ROSK-TALLPOST** INCLUDES 4 TALL ROLLOUT POSTS W/PEG HOLES & 16 SCREWS POST WILL BE 55" LONG	120 360	EA EA

HARDWARE

BLUM HINGE SCREWS 	3/4" SCREW	**HINGESCREW**	15	PKG
	PACKAGE OF 10			
BLUMOTION HINGE  HINGE DESIGN VARIES BY OVERLAY SIZE	**STANDARD OVERLAY**			
	1/2" OVERLAY	**LH-BM1/2**	21	EA
		USED ON STANDARD OVERLAY		
	5/8" OVERLAY	**LH-BM5/8**	21	EA
		USED ON BUTT DOORS IF THEY ARE HITTING		
	MOD FULL OVERLAY			
	1" OVERLAY	**LH-BM1**	21	EA
		USED ON CORNER CABINET		
	1 1/4" OVERLAY	**LH-BM11/4**	21	EA
		USED WITH 1 1/2" STILES		
	1 1/2" OVERLAY	**LH-BM11/2**	21	EA
		USED ON FULL OVERLAY		
	1 9/16" OVERLAY	**LH-BM19/16**	21	EA
		USED ON FULL OVERLAY IF DOORS HIT		
BLUMOTION DETACHABLE CLIP HINGE  HINGE DESIGN VARIES BY OVERLAY SIZE		**STANDARD OVERLAY**		
	1/2" OVERLAY	**LH-BMC1/2**	30	EA
		USED ON STANDARD OVERLAY		
	5/8" OVERLAY	**LH-BMC5/8**	30	EA
		USED ON STANDARD OVERLAY WITH BUTT DOORS IF THEY ARE HITTING		
		MOD FULL OVERLAY		
	1" OVERLAY	**LH-BMC1**	30	EA
		USED ON CORNER CABINET		
	1 1/4" OVERLAY	**LH-BMC11/4**	30	EA
		USED ON FULL OVERLAY		
	1 1/2" OVERLAY	**LH-BMC11/2**	30	EA
		USED ON FULL OVERLAY		
	1 9/16" OVERLAY	**LH-BMC19/16**	30	EA
		USED ON FULL OVERLAY WITH BUTT DOORS IF THEY ARE HITTING		
HINGE RESTRICTOR FOR BLUMOTION HINGE 		**HINGE RESTRICTOR**	9	EA
		Restricts the opening angle of the compact BluMotion hinge from a 110 degree angle to a 86 degree angle		
		ONLY AVAILABLE FOR BLUMOTION HINGE		
		NOT AVAILABLE INSTALLED - WILL BE SENT LOOSE		
		WILL NOT WORK ON CABINETS WITH ROLLOUTS		
BER HINGES 		**BER HINGES**	93	EA
		2 PIECE BASE EASY REACH HINGE		
		THIS BER HINGE ONLY COMES IN STANDARD 1/2" OVERLAY, IT IS NOT AVAILABLE IN FULL OVERLAY		
SHIM FOR HINGE 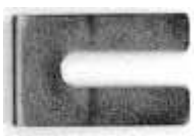		**HINGESHIM**	3	EA
		USED ON HINGES TO PULL DOORS TOGETHER		

ACCESSORIES

HARDWARE

TUB FRONT CLIPS 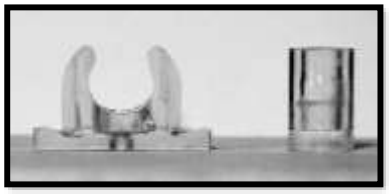	**TUBFRONT CLIP**	6	EA
	USED TO ATTACH DOOR FRONT		
FULL EXTENSION UNDERMOUNT SOCKET 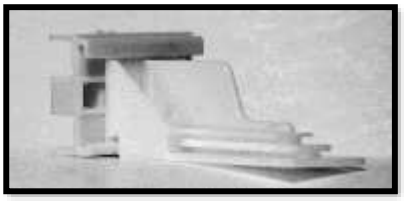	**UMFE SOCKET**	6	EA
7/8 EXT UNDERMOUNTSOCKET 	**UMB7/8EXT SOCKET**	6	EA
GRASS 3/4 SIDEMOUNT EXT SOCKET 	**GSM3/4EXT SOCKET**	6	EA
BLUM FULL EXTENSION UNDERMOUNT RELEASE CLIP INSTALL UNDER DRAWER BOX 	**UMFERELEASECLIP-R**	9	EA
	UMFERELEASECLIP-L	9	EA
	ONE RIGHT AND ONE LEFT REQUIRED PER DRAWER		
BLUM 7/8 RELEASE CLIP INSTALL UNDER DRAWER BOX 	**7/8RELEASECLIP-R**	9	EA
	7/8RELEASECLIP-L	9	EA
	ONE RIGHT AND ONE LEFT REQUIRED PER DRAWER		

ACCESSORIES

HARDWARE

BUMPERS 	**BUMPERS** SET OF 25	12	SET
SHELF CLIP 	**SHELF CLIP** SET OF 25 5MM	12	SET

HARDWARE

LOOSE DRAWER TRACK

FULL EXTENSION UNDERMOUNT - LOOSE TRACK SOFT CLOSE **FOR DRAWERS AND ROLLOUTS** 	12" DEEP CABINET	**LT-UMFE12**	282	PR
	15" DEEP CABINET	**LT-UMFE15**	282	PR
	18" DEEP CABINET	**LT-UMFE18**	282	PR
	21" DEEP CABINET	**LT-UMFE21**	282	PR
	24" DEEP CABINET	**LT-UMFE24**	282	PR
7/8 EXTENSION UNDERMOUNT - LOOSE TRACK SOFT CLOSE **FOR DRAWERS AND ROLLOUTS** 	12" DEEP CABINET	**LT-UMB7/8EXT12**	180	PR
	15" DEEP CABINET	**LT-UMB7/8EXT15**	180	PR
	18" DEEP CABINET	**LT-UMB7/8EXT18**	180	PR
	21" DEEP CABINET	**LT-UMB7/8EXT21**	180	PR
	24" DEEP CABINET	**LT-UMB7/8EXT24**	180	PR

HARDWARE

LOOSE DRAWER TRACK

3/4 EXTENSION SIDE MOUNT LOOSE DRAWER TRACK **NOT TO BE USED FOR ROLLOUTS** 	12" DEEP CABINET	**LT-GSM3/4EXT12**	54	PR
	15" DEEP CABINET	**LT-GSM3/4EXT15**	54	PR
	18" DEEP CABINET	**LT-GSM3/4EXT18**	54	PR
	21" DEEP CABINET	**LT-GSM3/4EXT21**	54	PR
	24" DEEP CABINET	**LT-GSM3/4EXT24**	54	PR
3/4 EXTENSION SIDE MOUNT LOOSE TRACK **FOR ROLLOUTS** 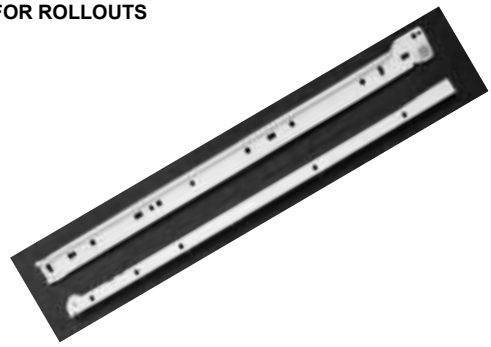	12" DEEP CABINET	**LTRO-GSM3/4EXT12**	54	PR
	15" DEEP CABINET	**LTRO-GSM3/4EXT15**	54	PR
	18" DEEP CABINET	**LTRO-GSM3/4EXT18**	54	PR
	21" DEEP CABINET	**LTRO-GSM3/4EXT21**	54	PR
	24" DEEP CABINET	**LTRO-GSM3/4EXT24**	54	PR
FULL EXTENSION SIDE MOUNT LOOSE TRACK 		**FOR FILE BASE DRAWERS**		
	ONLY USED ON OFFICE FILE DRAWER WITH STANDARD DRAWER OPTION	**LT-SMFE18** SOFT CLOSE	180	PR
	ONLY USED ON 15" DEEP WALL CABINETS	**FOR 15" DEEP WALL CABINETS** **LT-SMFE-12**	180	PR
	ONLY USED ON 12" DEEP WALL CABINETS	**FOR 12" DEEP WALL CABINETS** **LT-SMFE-10**	150	PR

Touch-Up Finish Instructions

Conversion Varnish is a chemical-cured, fast-drying finish that consists of 2 part: the finish and an acid catalyst that's added just before use.
The application should be sprayed-on to a lightly scuffed and wiped surface.

Gallon/Quart/Pint of Finish will be shipped in 2 parts.

- The finish will be shipped in metal canister.
- The catalyst will be shipped in a small plastic bottle.

Content:

- 1 Gallon of finish comes with 11 oz. catalyst
- 1 Quart of finish comes with 2.7 oz. catalyst
- 1 Pint of finish comes with 1.4 oz. catalyst



Mixing Instructions:
The proportions will be premeasured. Just before use, add the catalyst to the paint and stir well with a spoon or stir stick. DO NOT SHAKE catalyzed finish to avoid bubbles.

Caution: Shelf life after mixing is 24 hours maximum.



ACCESSORIES

FINISHING PRODUCTS

PAINT COLORS









OUR PAINTS ARE A TINTED CONVERSION VARNISH. WE WILL INCLUDE A CONTAINER OF CATALYST THAT HAS TO BE MIXED WITH THE TINTED VARNISH. AFTER THE CATALYST IS MIXED WITH VARNISH, IT MUST BE USED WITHIN 24 HRS.

SPRAY EQUIPMENT IS NEEDED FOR THIS APPLICATION. THIS CAN NOT BE HAND WIPED OR APPLIED WITH A PAINT BRUSH.

BEIGEPAINT = ACCESSIBLE BEIGE

SWPAINTPT = SHERWIN WILLIAMS CUSTOM COLOR

GALLON SIZE		
BEIGEPAINTGL	930	EA
BLACKPAINTGL	930	EA
CAPRIPAINTGL	930	EA
CHARBLUEPAINTGL	930	EA
DUSKPAINTGL	930	EA
EVERGREENFOGGL	930	EA
FOGPAINTGL	930	EA
FOXHALLPAINTGL	930	EA
FROSTPAINTGL	930	EA
IVORYPAINTGL	930	EA
OYSTERPAINTGL	930	EA
SHOJIWHITEGL	930	EA
SMOKYBLUEPAINTGL	930	EA
SWPAINTGL	930	EA
TAUPEPAINTGL	930	EA
WHITEPAINTGL	930	EA
COMES WITH 1 GALLON OF TINTED VARNISH & CATALYST		

QUART SIZE		
BEIGEPAINTQT	273	EA
BLACKPAINTQT	273	EA
CAPRIPAINTQT	273	EA
CHARBLUEPAINTQT	273	EA
DUSKPAINTQT	273	EA
EVERGREENFOGQT	273	EA
FOGPAINTQT	273	EA
FOXHALLPAINTQT	273	EA
FROSTPAINTQT	273	EA
IVORYPAINTQT	273	EA
OYSTERPAINTQT	273	EA
SHOJIWHITEQT	273	EA
SMOKYBLUEPAINTQT	273	EA
SWPAINTQT	273	EA
TAUPEPAINTQT	273	EA
WHITEPAINTQT	273	EA
COMES WITH 1 QUART OF TINTED VARNISH & CATALYST		

PINT SIZE		
BEIGEPAINTPT	138	EA
BLACKPAINTPT	138	EA
CAPRIPAINTPT	138	EA
CHARBLUEPAINTPT	138	EA
DUSKPAINTPT	138	EA
EVERGREENFOGPT	138	EA
FOGPAINTPT	138	EA
FOXHALLPAINTPT	138	EA
FROSTPAINTPT	138	EA
IVORYPAINTPT	138	EA
OYSTERPAINTPT	138	EA
SHOJIWHITEPT	138	EA
SMOKYBLUEPAINTPT	138	EA
SWPAINTPT	138	EA
TAUPEPAINTPT	138	EA
WHITEPAINTPT	138	EA
COMES WITH 1 PINT OF TINTED VARNISH & CATALYST		

ACCESSORIES

FINISHING PRODUCTS

TOUCH UP KITS

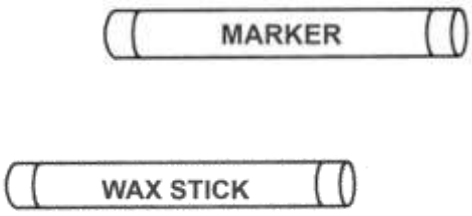

TUK-STAIN	150	SET
TOUCH UP KIT WITH ONE MARKER & ONE WAX STICK		
TUK-PAINT	150	SET
TOUCH UP KIT WITH ONE MARKER & ONE WAX STICK		
TUK-SW PAINT	150	SET
SW CUSTOM PAINT WILL ONLY INCLUDE ONE MARKER		
TUK-CAPRI DRIFT	300	SET
FOR CAPRI DRIFT - TWO MARKERS & TWO WAX STICKS		
TUK-FOG DRIFT	300	SET
FOR FOG DRIFT - TWO MARKERS & TWO WAX STICKS		
TUK-DUSK DRIFT	300	SET
FOR DUSK DRIFT - TWO MARKERS & TWO WAX STICKS		
TUK-WHITE DRIFT	300	SET
FOR WHITE DRIFT - TWO MARKERS & TWO WAX STICKS		
TUK-NATURAL	75	SET
NATURAL WILL ONLY INCLUDE THE WAX STICK		

HIGHLIGHT PENS



MUST HAVE TOP COAT APPLIED WHEN DRY

EBONYHLPEN	54	EA
UMBERHLPEN	54	EA
SMOKEHLPEN	54	EA

WIPING STAINS

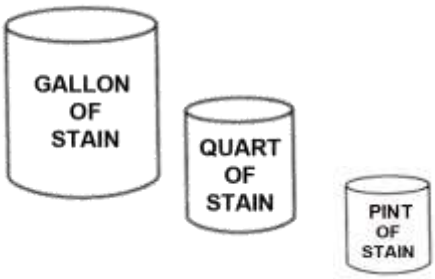

MUST HAVE TOP COAT APPLIED WHEN DRY

ALMONDSTAINGL	450	EA
ALMONDSTAINQT	120	EA
ALMONDSTAINPT	75	EA
BRIARWOODSTAINGL	450	EA
BRIARWOODSTAINQT	120	EA
BRIARWOODSTAINPT	75	EA
BROWNSEPIASTAINGL	450	EA
BROWNSEPIASTAINQT	120	EA
BROWNSEPIASTAINPT	75	EA
DRIFTWOODSTAINGL	450	EA
DRIFTWOODSTAINQT	120	EA
DRIFTWOODSTAINPT	75	EA
PECANSTAINGL	450	EA
PECANSTAINQT	120	EA
PECANSTAINPT	75	EA
RUSSETSTAINGL	450	EA
RUSSETSTAINQT	120	EA
RUSSETSTAINPT	75	EA
SANDSTAINGL	450	EA
SANDSTAINQT	120	EA
SANDSTAINPT	75	EA
SIENNASTAINGL	450	EA
SIENNASTAINQT	120	EA
SIENNASTAINPT	75	EA
STONESTAINGL	450	EA
STONESTAINQT	120	EA
STONESTAINPT	75	EA
WHEATSTAINGL	450	EA
WHEATSTAINQT	120	EA
WHEATSTAINPT	75	EA

FINISHING PRODUCTS

SPRAY NO WIPE STAINS	**CASHEWSTAINGL**	450	EA
	CASHEWSTAINQT	120	EA
	CASHEWSTAINPT	75	EA
	HAZELSTAINGL	450	EA
	HAZELSTAINQT	120	EA
	HAZELSTAINPT	75	EA
	NUTMEGSTAINGL	120	EA
	NUTMEGSTAINQT	450	EA
	NUTMEGSTAINPT	75	EA
	PEBBLESTAINGL	450	EA
	PEBBLESTAINQT	120	EA
	PEBBLESTAINPT	75	EA
	RYESTAINGL	450	EA
	RYESTAINQT	120	EA
	RYESTAINPT	75	EA
DYE STAINS	**CHESTNUTDYEGL**	720	EA
	CHESTNUTDYEQT	180	EA
	INCLUDES BROWN DYE & BRIARWOOD STAIN		
	FRONTIERDYEGL	720	EA
	FRONTIERDYEQT	180	EA
	INCLUDES FRONTIER DYE & FRONTIER STAIN		
	MOCHADYEGL	720	EA
	MOCHADYEQT	180	EA
	INCLUDES BROWN DYE & MOCHA STAIN		
	APPLY DYE, LET DRY, AND APPLY STAIN THEN TOP COAT.		
ACCENT GLAZE	**CHOCGLAZEQT**	225	EA
	CHOCGLAZEPT	111	EA
	BLACKGLAZEQT	225	EA
	BLACKGLAZEPT	111	EA
	We recommend spray equipment for this application. You can apply with a brush or foam brush as well. Spray or brush on the accent glaze. When it is dry, wipe off excess to your discretion. How little or how much you remove will be determined by the look you are trying to achieve.		
SHEEN TOP COAT	**TOPCOATGL**	360	EA
	ONE GALLON VARNISH & CATALYST		
	TOPCOATQT	90	EA
	ONE QUART VARNISH & CATALYST		
	WE WILL INCLUDE A CONTAINER OF CATALYST THAT NEEDS TO BE MIXED WITH THE VARNISH. AFTER THE CATALYST IS MIXED WITH THE VARNISH, IT MUST BE USED WITHIN 24HRS. SPRAY EQUIPMENT IS NEEDED FOR THIS APPLICATION. THIS CANNOT BE HAND WIPED OR APPLIED WITH A PAINT BRUSH		

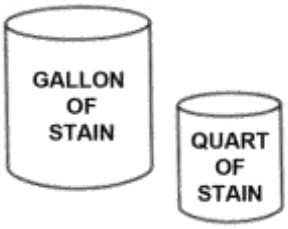

SPRAY EQUIPMENT IS NEEDED FOR THIS APPLICATION. THIS CAN NOT BE HAND WIPED OR APPLIED WITH A PAINT BRUSH. MUST HAVE TOP COAT APPLIED WHEN DRY



1 GALLON OF DYE WILL COME WITH 1 GALLON OF STAIN

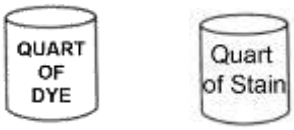

1 QUART OF DYE WILL COME WITH 1 QUART OF STAIN

SPRAY EQUIPMENT IS NEEDED FOR THIS APPLICATION. THIS CAN NOT BE HAND WIPED OR APPLIED WITH A PAINT BRUSH. MUST HAVE TOP COAT APPLIED WHEN DRY.



MUST HAVE TOP COAT APPLIED WHEN DRY



ACCESSORIES

FINISHING PRODUCTS

SPRAY STAIN - TONER



ALMONDSTAINCAN	54	EA
BRIARWOODSTAINCAN	54	EA
BROWNSEPIASTAINCAN	54	EA
CASHEWSTAINCAN	54	EA
CHESTNUTSTAINCAN	54	EA
DRIFTWOODSTAINCAN	54	EA
FRONTIERSTAINCAN	54	EA
HAZELSTAINCAN	54	EA
MOCHASTAINCAN	54	EA
NUTMEGSTAINCAN	54	EA
PEBBLESTAINCAN	54	EA
PECANSTAINCAN	54	EA
RUSSETSTAINCAN	54	EA
RYESTAINCAN	54	EA
SANDSTAINCAN	54	EA
SIENNASTAINCAN	54	EA
STONESTAINCAN	54	EA
WHEATSTAINCAN	54	EA

SPRAY PAINT



BEIGEPAINTCAN	120	EA
BLACKPAINTCAN	120	EA
CAPRIPAINTCAN	120	EA
CHARBLUEPAINTCAN	120	EA
DUSKPAINTCAN	120	EA
EVERGREENFOGCAN	120	EA
FOGPAINTCAN	120	EA
FOXHALLPAINTCAN	120	EA
FROSTPAINTCAN	120	EA
IVORYPAINTCAN	120	EA
OYSTERPAINTCAN	120	EA
SHOJIPAINTCAN	120	EA
SMOKYBLUEPAINTCAN	120	EA
TAUPEPAINTCAN	120	EA
WHITEPAINTCAN	120	EA
TOPCOATCAN	120	EA
SWPAINTCAN	120	EA

BEIGEPAINTCAN = ACCESSIBLE BEIGE

SWPAINTCAN = SHERWIN WILLIAMS CUSTOM COLOR

LITERATURE

CLASSIC PRICE BOOK 	**CLPRICEBOOK** A FREE PDF CAN BE DOWNLOADED FROM THE DEALER PORTAL OF THE KOCH CABINET WEBSITE. EMAIL KOCHMARKETING@KOCHANDCO.COM IF YOU NEED ACCESS TO THE DEALER PORTAL	105	EA
CLASSIC LARGE BROCHURE 	**CLBROCHURE** **8 1/2" X 11" BROCHURE COMES IN SETS OF 10**	150	SET
CLASSIC HANDOUT 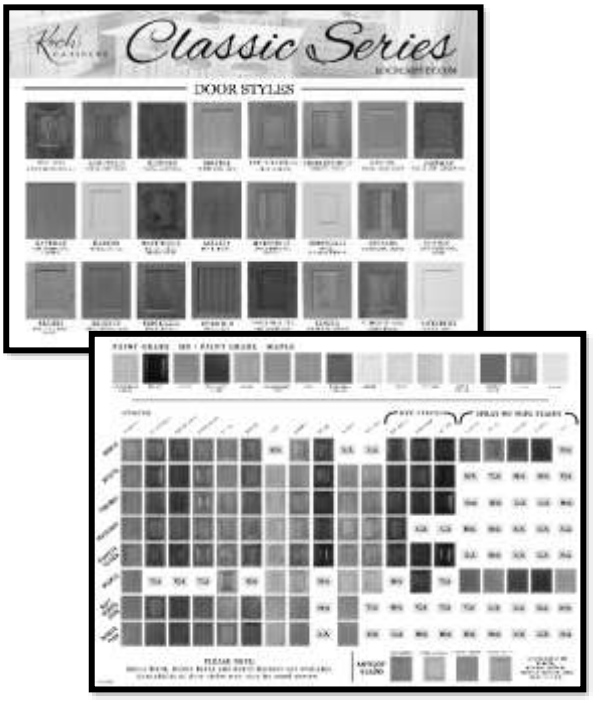	**CLHANDOUT** **8 1/2" X 11" HANDOUT COMES IN SETS OF 25** **(FRONT AND BACK - 1 PAGE HANDOUT)**	180	SET

FOR SINGLE DOOR - NO RE-FACE JOBS WILL BE ACCEPTED

LOOSE DOORS - PRICING IS PER SQUARE FOOT

PRICING IS PER SQUARE FOOT - MINIMUM ORDER 2 SQUARE FEET
OPEN FRAME DOORS ARE NOT AVAILABLE OVER 24" WIDE OR 30" TALL

LOOSE DOOR WILL BE ROUTED - DOES NOT INCLUDE HINGES SEE PAGE 380 FOR HINGE OPTIONS
LOOSE DOOR NR WILL NOT BE ROUTED - DOES NOT INCLUDE HINGES SEE PAGE 380 FOR HINGE OPTIONS

PRICE PER SQUARE FOOT

DOOR STYLE	A	B	C	D	E	F	G
LOOSE DOOR	60.00	75.00	105.00	105.00	120.00	135.00	150.00
LOOSE DOOR NR	60.00	75.00	105.00	105.00	120.00	135.00	150.00

MOLDED DOOR - UPCHARGE (CHECK PAGE 54 FOR AVAILABILITY)	$231 EA

STILE AND RAIL DOORS (not including miter doors) TALLER THAN 42" WILL HAVE A CENTER RAIL.

MITER DOORS TALLER THAN 46" WILL BE TWO DOORS ATTACHED TOGETHER WITH BRACKETS ON THE BACK SIDE. IT WILL FUNCTION AS ONE DOOR. (SEE PAGE 27)

STILE AND RAIL DOORS - MAX WIDTH 24" AND MAX HEIGHT 62"

MITER DOORS - MAX WIDTH 24" AND MAX HEIGHT 46 1/2"

DOORS WIDER THAN 24" OR TALLER THAN 46 1/2" (MITER DOOR) AND 62" (STILE AND RAIL DOOR) WILL HAVE TO BE APPROVED THROUGH CAB CONNECT SPECIALS MANAGER, AND WILL BE EXCLUDED FROM WARRANTY

STILE & RAIL AND MITER DOORS N/A LESS THAN 6 1/2" WIDE AND 10" TALL

ADDITIONAL UPCHARGES FOR FINISH AND WOOD SPECIES WILL APPLY FOR LOOSE DOORS AND DRAWERS

LOOSE DRAWER FRONTS - PRICING IS PER SQUARE FOOT

DRAWER STYLE	PRICE PER SF
LDF-BEDFORD	150.00
LDF-GATEWAY	150.00
LDF-LIBERTY	150.00
LDF-MITER	120.00
LDF-RIVERTON	150.00
LDF-SLAB	105.00
LDF-5PC	135.00

5 PC MLD FRONT - MOLDED DRAWER FRONT UPCHARGE	$270 EA

MOLDED N/A ON BEDFORD, GATEWAY, LIBERTY, MITER, RIVERTON OR SLAB DRAWERS

SLAB DRAWER FRONT SIZE LIMITATIONS

	MIN	MAX
WIDTH	6 1/2"	36"
HEIGHT	3 3/4"	20"

5 PC DRAWER FRONT SIZE LIMITATIONS

	MIN	MAX
WIDTH	8 1/2"	36"
HEIGHT	5 1/2"	20"

MITER DRAWER FRONT SIZE LIMITATIONS

	MIN	MAX
WIDTH	6 1/2"	36"
HEIGHT	5 1/2"	20"

ACCESSORIES

APPLIANCE PANELS

Cabinet Type	PRICE LIST PER SQUARE FOOT								
	CABINET	A	B	C	D	E	F	G	
AUTHENTIC APPLIANCE PANELS	APPL PANEL AUT	207	222	279	279	294	309	348	

SPACER AND BACKER COME ASSEMBLED

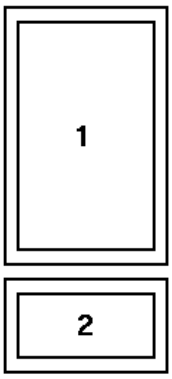

REF-TWIN HORIZ

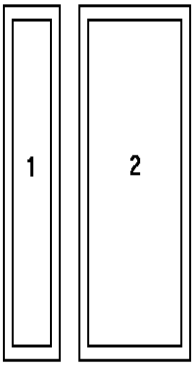

REF-TWIN VERT

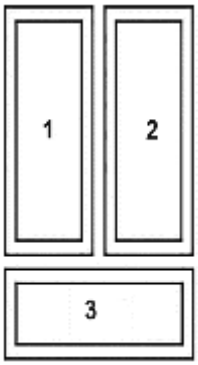

REF- FRENCH DOOR 3-PANEL

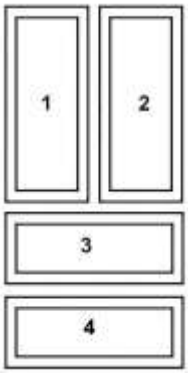

REF- FRENCH DOOR 4 PANEL

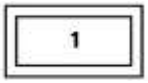

GRILLE

Cabinet Type	PRICE LIST PER SQUARE FOOT								
	CABINET	A	B	C	D	E	F	G	
AUTHENTIC APPLIANCE DOORS	APPL WINECOOLER	207	222	279	279	294	309	348	
	LOOSE APPL DOOR	207	222	279	279	294	309	348	

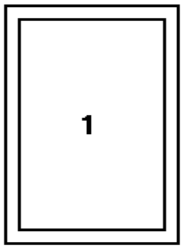

APPL WINECOOLER
WINE COOLER DOOR WITH NO PANEL
N/A W/MITER DOOR

APPL WINE COOLER WILL HAVE A SHAKER INSIDE PROFILE. OUTSIDE PROFILE WILL MATCH DOOR STYLE.

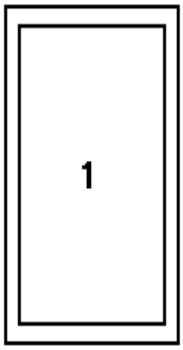

LOOSE APPL DOOR
LOOSE APPLIANCE DOOR
WITH PANEL

ORDER FORMS FOR APPLIANCE FRONTS CAN BE FOUND ON THE DEALER PORTAL OF OUR WEBSITE. PLEASE COMPLETE THE FORM(S) AND ATTACH THEM TO YOUR CAB CONNECT ORDER. IF YOU DO NOT HAVE ACCESS TO THE DEALER PORTAL, PLEASE EMAIL KOCHMARKETING@KOCHANDCO.COM AND WE WILL GET YOU SET UP.
YOU CAN ALSO REACH OUT TO OUR CUSTOMER SERVICE TEAM AT ORDERS@KOCHCABINET.COM

SEE PAGE 27 FOR INFORMATION ON STILE AND RAIL DOORS OVER 42" AND MITER DOORS OVER 46" TALL

Koch CABINETS

APPLIANCE PANELS

- *1/4" backer with 1/8" spacer*
- *Appliance panel order form(s) must be submitted with order*

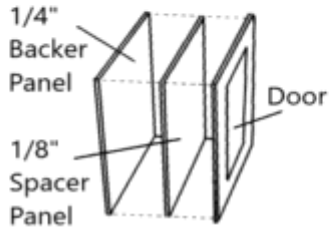

MORTISE & TENON APPLIED DOORS:

Max. 36" W x 96" H

Over 25" W will have a center stile

42 1/16" H to 74" H will have one middle rail

74 1/16" H to 96" H will have two middle rails

MITER DOORS:

Doors taller than 46" are going to be two doors attached together with brackets on the back side and function as one door. Doors over 24" wide will be converted to two doors wide.

BEDFORD, GATEWAY & LIBERTY (ONE SINGLE PANEL) APPLIED DOORS:

Max. 36" W x 96" H

RIVERTON DOOR STYLE:

Max. 20 1/2" W x 40 1/2" H

CALCULATE WITH EASE

Visit our website and login to the dealer portal.
Use the appliance panel calculator to create your panel.

If you do not have access to the Dealer Portal, please reach out to kochmarketing@kochandco.com

NOTES OR ADDITIONS



THE FOLLOWING INFORMATION CAN BE FOUND ON OUR WEBSITE UNDER THE DEALER PORTAL:

FILLABLE APPLIANCE DOOR FORMS
FILLABLE CABINET FINISH RELEASE FORMS
FILLABLE CUSTOM COLOR FORMS
2020 CATALOG INFORMATION
PROKITCHEN INFORMATION
CURRENT SPEC BOOKS FOR ALL CABINET SERIES
BROCHURES & HANDOUTS FOR ALL CABINET SERIES

IF YOU DO NOT HAVE ACCESS TO THE DEALER PORTAL, PLEASE REACH OUT TO KOCHMARKETING@KOCHANDCO.COM

Koch Classic

Authentic Appliance Door Front Dimensions

THESE FILLABLE FORMS ARE AVAILABLE ON THE DEALER PORTAL OF OUR WEBSITE. IF YOU DO NOT HAVE ACCESS TO THE DEALER PORTAL, PLEASE REACH OUT TO KOCHMARKETING@KOCHANDCO.COM

Customer: _____ **Order Date:** _____

PO Number: _____ **Job Name:** _____

CHECK CONFIGURATION AND COMPLETE DIMENSION INFORMATION NEEDED BELOW FOR APPL DOOR AUT - NO PANEL WINE DOOR.

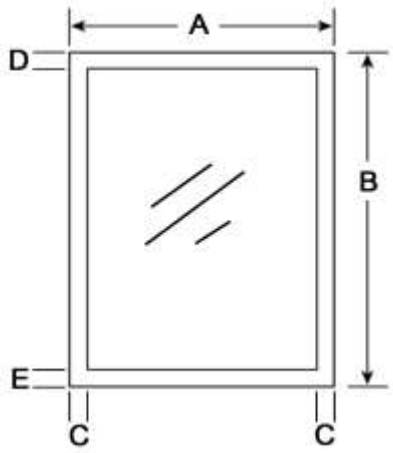

WINE COOLER DOOR WITH NO PANEL

A: WilNE DOOR WIDTH

A _____

B: WilNE DOOR HEIGHT

B _____

C: WilNE DOOR STILE WIDTH

C _____

D: TOP RAIL HEIGHT

D _____

E: BOTTOM RAIL HEIGHT

E _____

CHECK CONFIGURATION AND COMPLETE DIMENSION INFORMATION NEEDED BELOW FOR DOOR.

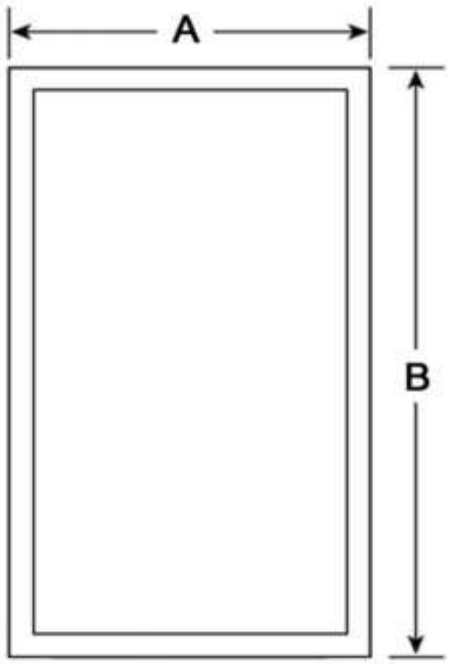

LOOSE APPLIANCE PANEL DOOR

A: DOOR WIDTH

A _____

B: DOOR HEIGHT

B _____

Koch Classic

Authentic Appliance Front Dimension

THESE FILLABLE FORMS ARE AVAILABLE ON THE DEALER PORTAL OF OUR WEBSITE. IF YOU DO NOT HAVE ACCESS TO THE DEALER PORTAL, PLEASE REACH OUT TO KOCHMARKETING@KOCHANDCO.COM

Customer: _____ **Order Date:** _____

PO Number: _____ **Job Name:** _____

STANDARD

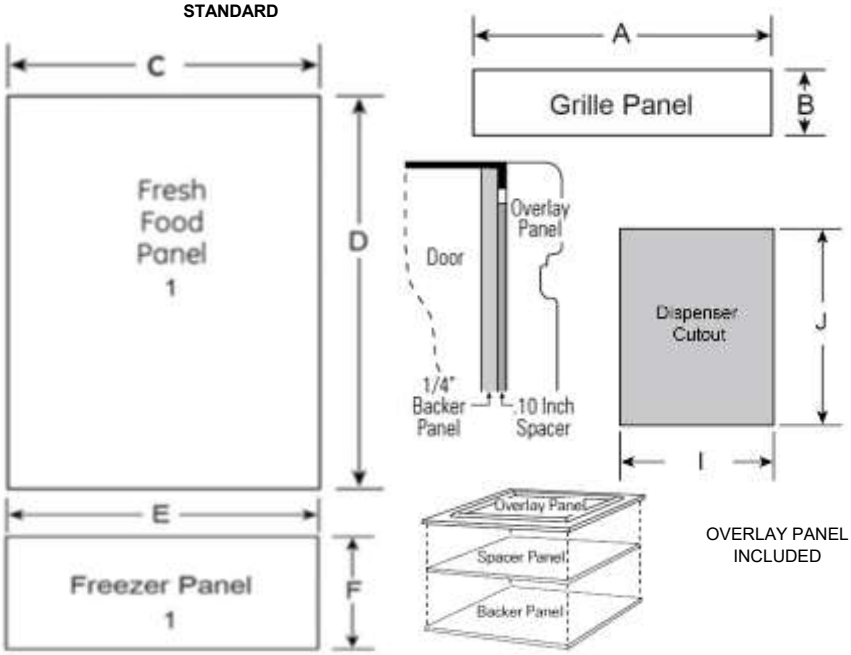

OVERLAY PANEL INCLUDED

SIDE BY SIDE

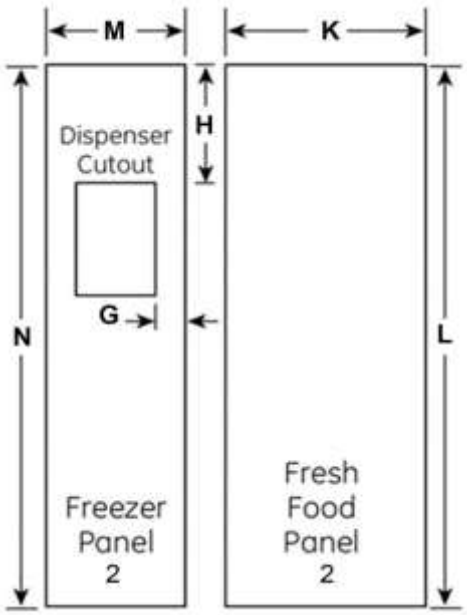

SPACER & BACKER COME ASSEMBLED

CHECK CONFIGURATION ABOVE AND COMPLETE DIMENSION INFORMATION FOR PANELS NEEDED BELOW

A - GRILLE PANEL WIDTH

1/4" PANEL WIDTH _____

1/8" PANEL WIDTH _____

DOOR SIZE _____

B - GRILLE PANEL HEIGHT

1/4" PANEL HEIGHT _____

1/8" PANEL HEIGHT _____

DOOR SIZE _____

DISPENSER CUTOUT **POSITION**

G WIDTH _____ **H** HEIGHT _____

DISPENSER CUTOUT **DIMENSIONS**

I WIDTH _____ **J** HEIGHT _____

STANDARD APPLIANCE DIMENSIONS

C - FOOD PANEL 1 WIDTH	**D** - FOOD PANEL 1 HEIGHT	**E** - FREEZER PANEL 1 WIDTH	**F** - FREEZER PANEL 1 HEIGHT
1/4" PANEL WIDTH _____	1/4" PANEL HEIGHT _____	1/4" PANEL WIDTH _____	1/4" PANEL HEIGHT _____
1/8" PANEL WIDTH _____	1/8" PANEL HEIGHT _____	1/8" PANEL WIDTH _____	1/8" PANEL HEIGHT _____
DOOR SIZE _____	DOOR SIZE _____	DOOR SIZE _____	DOOR SIZE _____

SIDE BY SIDE APPLIANCE DIMENSIONS

K - FOOD PANEL 2 WIDTH	**L** - FOOD PANEL 2 HEIGHT	**M** - FREEZER PANEL 2 WIDTH	**N** - FREEZER PANEL 2 HEIGHT
1/4" PANEL WIDTH _____	1/4" PANEL HEIGHT _____	1/4" PANEL WIDTH _____	1/4" PANEL HEIGHT _____
1/8" PANEL WIDTH _____	1/8" PANEL HEIGHT _____	1/8" PANEL WIDTH _____	1/8" PANEL HEIGHT _____
DOOR SIZE _____	DOOR SIZE _____	DOOR SIZE _____	DOOR SIZE _____

Koch Classic

Authentic Appliance Front Dimension

THESE FILLABLE FORMS ARE AVAILABLE ON THE DEALER PORTAL OF OUR WEBSITE. IF YOU DO NOT HAVE ACCESS TO THE DEALER PORTAL, PLEASE REACH OUT TO KOCHMARKETING@KOCHANDCO.COM

Customer: _____ **Order Date:** _____

PO Number: _____ **Job Name:** _____

FRENCH DOOR WITH THREE PANELS

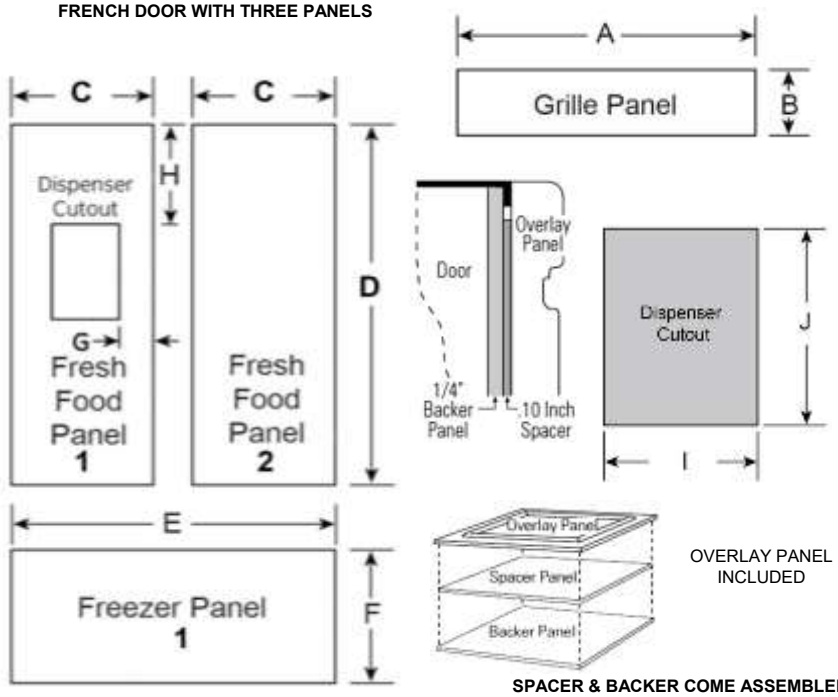

OVERLAY PANEL INCLUDED

SPACER & BACKER COME ASSEMBLED

FRENCH DOORS WITH FOUR PANELS

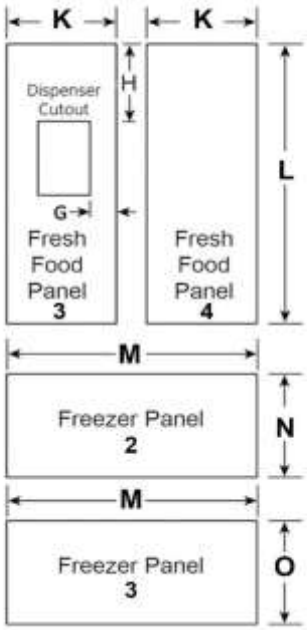

CHECK CONFIGURATION ABOVE AND COMPLETE DIMENSION INFORMATION FOR PANELS NEEDED BELOW

A - GRILLE PANEL WIDTH

1/4" PANEL WIDTH _____

1/8" PANEL WIDTH _____

DOOR SIZE _____

B - GRILLE PANEL HEIGHT

1/4" PANEL HEIGHT _____

1/8" PANEL HEIGHT _____

DOOR SIZE _____

DISPENSER CUTOUT **POSITION**

G WIDTH _____ **H** HEIGHT _____

DISPENSER CUTOUT **DIMENSIONS**

I WIDTH _____ **J** HEIGHT _____

FRENCH DOOR -THREE PANEL - APPLIANCE DIMENSIONS

C - FOOD PANEL 1 & 2 WIDTH	**D** - FOOD PANEL 1 & 2 HEIGHT	**E** - FREEZER PANEL 1 WIDTH	**F** - FREEZER PANEL 1 HEIGHT
1/4" PANEL WIDTH _____	1/4" PANEL HEIGHT _____	1/4" PANEL WIDTH _____	1/4" PANEL HEIGHT _____
1/8" PANEL WIDTH _____	1/8" PANEL HEIGHT _____	1/8" PANEL WIDTH _____	1/8" PANEL HEIGHT _____
DOOR SIZE _____	DOOR SIZE _____	DOOR SIZE _____	DOOR SIZE _____

FRENCH DOOR - FOUR PANEL - APPLIANCE DIMENSIONS

K - FOOD PANEL 3 & 4 WIDTH	**L** - FOOD PANEL 3 & 4 HEIGHT	**M** - FREEZER PANEL 2 & 3 WIDTH	**N** - FREEZER PANEL 2 HEIGHT	**O** - FREEZER PANEL 3 HEIGHT
1/4" PANEL WIDTH _____	1/4" PANEL HEIGHT _____	1/4" PANEL WIDTH _____	1/4" PANEL HEIGHT _____	1/4" PANEL HEIGHT _____
1/8" PANEL WIDTH _____	1/8" PANEL HEIGHT _____	1/8" PANEL WIDTH _____	1/8" PANEL HEIGHT _____	1/8" PANEL HEIGHT _____
DOOR SIZE _____	DOOR SIZE _____	DOOR SIZE _____	DOOR SIZE _____	DOOR SIZE _____

NOTES OR ADDITIONS

NOTES OR ADDITIONS

SAMPLE ITEMS

FACE FRAME, DOOR, AND DRAWER FRONT - 15" X 24"



FDD	354	EA

DOOR AND DRAWER FRONT COMBO - 12 1/2" X 21" (DOOR - 15 1/2" TALL)



DDFC	291	EA

SAMPLE DOORS - 12 1/2" X 15 1/2"



SAMPLE DOOR	120	EA
DRILL DOOR	0.01	EA
DRILL DOOR FOR MERCHANDISER (PINS)		

QUICK SHIP SAMPLE DOOR - 12 1/2" X 15 1/2"

ONLY AVAILABLE IN SAVANNAH15 W/4348 EDGE



ONLY AVAILABLE IN CHERRY, HICKORY, PAINT GRADE - HD, WHITE OAK, BIRCH, KNOTTY ALDER, AND BEECH

WILL SHIP IN APPROXIMATELY 4 TO 5 DAYS
ONLY TWO DOORS ALLOWED PER ORDER

QSSAMPLE DOOR	165	EA
DRILL DOOR	0.01	EA
DRILL DOOR FOR MERCHANDISER (PINS)		

SAMPLE ITEMS

MINI BASE



SHOWN IN MOD FULL OVERLAY



SAMPLE BASE	645	EA

SAMPLE MINI BASE - 15" X 24", 18" DEEP WITH ONE SIDE CLASSIC, ONE SIDE IMPERIAL, BOTH SIDES SKINNED.

DOVETAIL DRAWER W/UMFE TRACK AND DOVETAIL ROLLOUT W/ 7/8 EXTENSION UNDERMOUNT TRACK.

MERCHANDISER



SHOWN WITH BRISTOL DOOR STYLE

MERCH-BIR-D	6300	EA
MERCH-BEE-D	6300	EA
MERCH-RUBEE-D	6300	EA
MERCH-PAINT-D	6300	EA
MERCH-WO-D	6300	EA
MERCH-RWO-D	7560	EA

Top Section

Top section is 42" wide, 60" tall, 15" deep, and will have applied skins on the sides. Open door section will have a finished interior.

Top rail has a 6" arch with engraved logo. A loose top that is assembled w/crown molding comes separate and can be placed on top after it is delivered. Hanging hardware included to display sample doors.

Base Section

The base section is 42" wide, 28 1/2" tall, 21" deep and has a 5 3/4" flush toe kick. The base will have butt doors, with the right door having Blumotion Soft Close Hinges and the left door having Blumotion Soft Close Detachable Clip Hinges. It will include two dovetail ROSK, top one with SM guides and bottom one with UMFE. The base will have four working drawers. The top left and top right drawer will be DT-UMFE, the middle right drawer will have a DT-7/8. The bottom right drawer will have a DT-SM and will have a 5PC drawer front. The base will have a 1 1/2" wood top with countertop edging applied. Merchandiser can be ordered in Birch, Beech, Rustic Beech, White Oak and Rift White Oak and is available in any color and door style. Base section will have finished ends. Merchandiser is shown as standard overlay, but can also be ordered in full overlay.

DOORS SOLD SEPARATELY - WILL HOLD UP TO 60 DOORS

COMES WITH 60 DOOR PINS

MERCHANDISER DOOR DRILL JIG INCLUDED

STARTER DOOR KIT IS AVAILABLE ON PAGE **404**

SAMPLE ITEMS

DOOR RACK 	**DOORRACK-BIR**	1455	EA
	DOORRACK-CHE	1455	EA
	THE DOOR RACK IS 63" TALL X 36" WIDE		
	COMES WITH 51 SETS OF DOOR PINS		
	WILL HOLD UP TO 51 DOORS. (DOORS NOT INCLUDED)		
	STARTER DOOR KIT IS AVAILABLE ON PAGE **404**		
	DOORS SOLD SEPARATELY		
SUPPORT RAILS FOR MERCHANDISER (PINS)  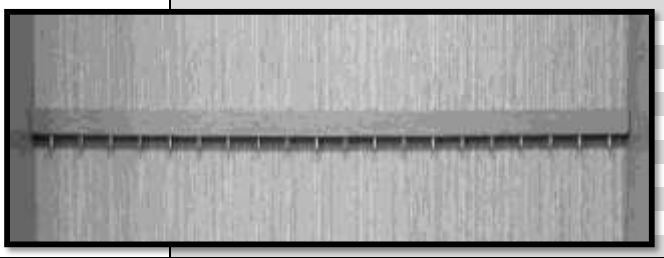	**MRAILTOP-42**	340	EA
	MRAILMIDDLE-42	340	EA
	MRAILBOTTOM-42	340	EA
	MERCHANDISER RAIL IS 7/8" X 1 7/16" X 42"		
	THIS MERCHANDISER SUPPORT RAIL IS FOR THE NEWER VERSION - DOORS HELD BY PINS		
MERCHANDISER DOOR DRILL JIG 	**MERCHDOORJIG**	75	EA
	USE THIS JIG TO DRILL HOLES IN SAMPLE DOORS TO HANG ON PINS IN NEWER MERCHANDISER		
LARGE SIGNAGE 	**LARGE SIGNAGE**	195	EA
	12" X 30 3/8"		
	MADE WITH BIRCH, SPECIFY STAIN WHEN ORDERING		
SUPPORT RAILS FOR MERCHANDISER (BRACKETS) 	**MRAILBIRCH-42**	225	EA
	MERCHANDISER RAIL IS 7/8" X 1 7/16" X 42"		
	THIS MERCHANDISER SUPPORT RAIL IS FOR THE OLD VERSION - DOORS HELD BY BRACKETS		
MERCHANDISER DOOR BRACKETS 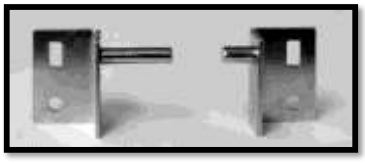	**DOORBRACKET-HL**	210	EA
	LEFT HINGE - DOORS WILL SWING LEFT		
	DOORBRACKET-HR	210	EA
	RIGHT HINGE - DOORS WILL SWING RIGHT		
	SET OF 15 BRACKETS / FOR OLD MERCHANDISER		

SAMPLE BLOCKS

SAMPLE MOLDING CHAIN, SAMPLE BLOCKS & STARTER DOOR KIT

SBS	SAMPLE BLOCK SET	825	SET
ISB	INDIVIDUAL SAMPLE BLOCK	12	EA
SMC	SAMPLE MOLDING CHAIN	48	EA
SDK	STARTER DOOR KIT (USE 'DRILL SDK' MOD BELOW TO DRILL DOORS FOR MERCHANDISER)	900	SET
DRILL SDK	DRILL STARTER DOOR KIT FOR MERCHANDISER (PINS) - ADD AS A MOD WITH STARTER DOOR KIT	0.01	SET

SAMPLE STAIN BLOCKS INCLUDED IN SET / (**) are not in Set

	NATURAL	SIENNA	ALMOND	PECAN	BRIARWOOD	CHESTNUT	FRONTIER	RUSSET	MOCHA	SEPIA	DRIFTWOOD	STONE	WHEAT	SAND		
BEECH													N/A			
BIRCH	N/A	N/A		N/A									N/A	N/A		
CHERRY				N/A							**	N/A	**	**		
HICKORY						**	N/A		N/A							
***K ALDER**											**	**				
MAPLE				N/A	N/A	N/A		N/A	N/A	N/A	N/A	N/A				
WHITE OAK	N/A					N/A	N/A		N/A			N/A				
RIFT WHITE OAK	N/A					N/A	N/A		N/A			N/A				

SAMPLE SPRAY NO WIPE STAIN BLOCKS INCLUDED IN SET / (**) are not in Set

	CASHEW	HAZEL	NUTMEG	PEBBLE	RYE											
BIRCH					N/A											
MAPLE			**													

SAMPLE PAINT BLOCKS INCLUDED IN SET / (**) are not in Set

	WHITE	IVORY	DUSK	OYSTER	TAUPE	CAPRI	FOG	FOXHALL GREEN	FROST	CHAR BLUE	BLACK	SMOKY BLUE	EV FOG	SHOJI	BEIGE
PAINT GRADE - HD															
BEECH	**	**	**	**	**	**	**	**	**	**	**	**	**	**	**
BIRCH	**	**	**	**	**	**	**	**	**	**	**	**	**	**	**
***K ALDER**	**	**	**	**	**	**	**	**	**	**	**	**	**	**	**
RIFT WHITE OAK	**	**	**	**	**	**	**	**	**	**		**	**	**	**

(**) These stain and paint blocks can be ordered plain as individual blocks.

***KNOTTY ALDER SAMPLE BLOCK WILL NOT HAVE RUSTIC CHARACTERISTICS. **NO SAMPLE BLOCK INCLUDED IN SET, BUT CAN BE PURCHASED SEPARATELY.**

SAMPLE BLOCKS NOT AVAILABLE IN: RUSTIC HICKORY, RUSTIC BEECH, RUSTIC CHERRY, RUSTIC BIRCH OR RUSTIC WHITE OAK.

NO SPECIALTY FINISHES (HIGHLIGHT, ACCENT GLAZE, RUB THRU OR DISTRESS) CAN BE ADDED TO A SAMPLE BLOCK. PLEASE ORDER A SAMPLE DOOR.

STARTER DOOR KIT INCLUDES:

PRAIRIE/950 - PAINT GRADE-HD - FOXHALL GREEN
BRISTOL/SHAKER - PAINT GRADE-HD - FOG
GATEWAY - RIFT WHITE OAK - WHEAT
PLATEAU/4348 - WHITE OAK - SAND
BEDFORD - PAINT GRADE-HD - FROST
SAVANNAH15/4348 - HICKORY - PECAN
NORFOLK15/950 - BIRCH - WHITE DRIFT
BRISTOL/4348 - BEECH - ALMOND
CHARLESTON15/4348 - RUSTIC BEECH - BRIARWOOD
LIBERTY - PAINT GRADE-HD - SMOKY BLUE
CENTENNIAL15/950 - MAPLE - PECAN
FAIRWAY/950 - BIRCH - BROWN SEPIA

NOTES OR ADDITIONS

NOTES OR ADDITIONS

ACCESSORIES - INDEX

1 1/2" SHELF MOLDING	377
3/4" SHELVING	377
ACCENT GLAZE	384
ANGLED FILLERS 3"	367
APPLIANCE GARAGES	375
APPLIANCE PANELS	387
BASE CORNER SINK FLOOR	376
BASE SINK FLOOR	376
BLUM HINGE SCREWS	380
BUMPERS	381
CABINET MATERIAL	370
CLASSIC DRAWER BOX MATERIAL	378
CLOSET ROD	376
CORNER FILLERS	367
DOOR MATERIAL	370
DOVETAIL DRAWER BOX MATERIAL	378
DOVETAIL DRAWER BOX - LOOSE	378
DUSTCOVERS	372
DYE STAIN	384
FACE FRAME MATERIAL	370
FALSE FRONT DRAWER BRACKET	378
FILLERS - 3"	367
FILLERS - 6"	368
FLOATING SHELF	377
HIGHLIGHT PENS	384
HINGES AND HINGE ACCESSORIES	380
LITERATURE	388
LOOSE DOORS	386
LOOSE DRAWER FRONTS	386
LOOSE DRAWER TRACK	382
MITER DOOR MATERIAL	370
OVERLAY FILLERS 2 1/2", 3 1/2", & 6"	369
PAINT	383
PRICE BOOKS	388
RANDOM LENGTH FILLERS	368
ROLLOUTS - LOOSE & ROLLOUT POSTS	379
SHEEN TOP COAT	385
SHELF CLIPS	381
SOCKETS FOR TRACK	381
SPRAY PAINT	385
SPRAY STAIN	385
STANDARD DRAWER BOX - LOOSE	378
TOUCH UP KITS	383
TUB FRONT CLIPS	381
VALANCES	371-372
WHAT NOT SHELVES	373-374
WIPING STAIN	384
WOOD TOP	375
WOOD TOP CLIP CORNER	375

BASES - INDEX

ANGLE TRANSITION BASE	195
BLIND CORNER BASES	187
BREADBOARD BASE CABINETS	177-179
CANISTER BASE PULLOUT	168
CORNER BASE LAZY SUSAN WITH REVOLVING DOORS	190
CORNER BASE WITH PIE SHAPE DRAWERS	193
CRISS CROSS WINE RACK	175
DIAGONAL ANGLE BASE	194
DIAGONAL CORNER BASE WITH LAZY SUSAN	191
DIAGONAL CORNER BASE WITH SHELF	190
DIAGONAL CORNER BASE WITH THREE DOORS	193
DIAGONAL CORNER SINK BASE	190
DIAGONAL CORNER SINK BASE - RECESSED FRONT	189
DIMENSIONS	157-164
DISHWASHER BASES	182
DRAWER BASES	179-180
EASY REACH WITH LAZY SUSAN	192
EASY REACH WITH SHELF	193
FARM SINK BASE	182
FULL HEIGHT DOOR BASE	166
INVERTED BASE SINK	181
ISLAND BASE WITH FULL DEPTH SHELF	188
ISLAND BLIND CORNER	189
ISLAND CORNER	188
KNIFE INSERT AND CANISTER BASE	168
MICROWAVE BASES	185
OVEN BASE	184
PAPER TOWEL DRAWER BASE	167
POTS & PANS BASES	186
PULLOUT BASE	168
PULLOUT IRONING BOARD	168
RANGE BASE	184
RANGE BASE WITH 2 DRAWERS	183
RANGE BASE WITH TWO ROLLOUTS	184
RANGE BASE WITH WARMING DRAWER	183
ROLLOUTS BASE	176
ROLLOUTS BASE WITH FULL HEIGHT DOOR	177
SINK BASES	181
SINK FRONTS	196
SOFT CLOSE TRASH ROLLOUTS	169
SPICE DRAWERS	175
STANDARD BASES	165
TRANSITION BASE	195
TRAY DIVIDER & FULL HEIGHT DOOR	170
V SHAPED ANGLE BASE	194
WALL DEPTH BASES	167
WINDOW SEAT	170
WINE CABINETS WITH FACE FRAME	171
WINE CRADLE WITH BUTT DOORS	174
WINE CRADLE WITH DRAWERS	174
WINE CUBBIES	172
WINE RACKS	173

MODIFICATIONS - INDEX

5 PIECE DRAWER UPGRADE	347
ADA MODIFICATIONS	364
ADD MULLION	352
ADDITIONAL SHELF	355
ANGLED CABINETS	363
AVENTOS LIFT SYSTEM	344
BEAD BOARD BACK PANEL	360
BER EXTENSION	360
BLOCKING	362
BLUMOTION HINGE - UPGRADE	341
BOOKCASE MOD FOR 3" FLUSH TOE	358
BREADBOARD - WOOD EDGE	345
CABINET BOX MODIFICATIONS	364
CABINET DOOR SENT LOOSE	341
CABINET PARTITIONS	358
CHANGE HINGE SIDE	341
CLIPPED CORNER	355
DELETE DOOR	341
DOVETAIL 7/8 EXTENSION	347
DOVETAIL DRAWER WITH 3/4 EXTENSION	347
DRAWER FLOOR	345
DROP STILE - BASE, OFFICE, TALL, & VANITY	351
DROP STILE WALL	351
EXTEND SIDES BACK	354
EXTEND SIDES DOWN	354
EXTENDED RAIL	352
EXTENDED STILE	350
EXTRA DOOR	341
EXTRA DRAWER	345
EXTRA SECTION	350
EXTRA SECTION IN PANTRY	350
FACE FRAME AND DOORS	354
FALSE BACK	354
FALSE FRONT	346
FINISH BLIND OPENING	360
FINISH BOTTOM / PREP BOTTOM	359
FINISHED INTERIOR	359
FLUSH TOE KICK - LOOSE	357
FLUSH TOE KICK MOD TO CHANGE HEIGHT	356
FRAME & OPERATING DOOR AS CABINET SIDE	342
FULL DEPTH SHELF	355
FULL WIDTH FALSE FRONT FOR TUB VANITY	346
LIGHT BOTTOM RAIL	353
LOCKING DOOR	343
LOCKING DRAWER	345
MOD FOR SINGLE DOOR INSTEAD OF BUTT DOORS ON GARAGE OF WD CABINET	342
MOD FULL OVERLAY DOOR OPTION	342
MOLDED 5 PIECE DRAWER UPGRADE	347
MULLION MOD TO 1 3/4"	351
NARROW TOP, CENTER, OR BOTTOM RAIL	353
NO BOTTOM RAIL	352
NO TOE KICK	356
ORGANIZER OPTIONS	362
PANEL MODIFICATIONS	365
PANTRY WALK THRU INSWING MOD	358
PLATE DISPLAY RACK	361
POCKET DOORS	343
PREP CABINET FOR FEET	357
RECESSED TOE KICK	356
REDUCE HEIGHT OF FARM SINK TOP RAIL	353
ROLLOUT SHELF	348
ROLLOUT UPGRADES	348

CONTINUED ON PAGE 406

MODIFICATIONS - INDEX

ROLLOUTS	348-349
SPLIT DOOR MOD	343
STEM GLASS HOLDER	361
SPLIT TOP DRAWER	345
STILE MOD TO 1 1/2"	351
TOE KICK - LOOSE	357
UNDERMOUNT FULL EXTENSION BLUM MOTION TRACK	347
U-SHAPED DRAWER	346
VALANCE RAIL AS STANDARD RAIL REPLACEMENT	352
VALANCE TOE KICK	357
WALL HOOD MOLDING FOR STANISCI HOODS	365
WER EXTENSION	360
WIDE TOP, CENTER, OR BOTTOM RAIL	353
WINE BOTTLE RACK	361
WINE CUBBIE PINHOLE FILLING	359
WINE RACK WITH LATTICE	361
WORKING DRAWER FOR TUB VANITY	346

MOLDING - INDEX

BASE SHOE	336
BATTEN	338
CAB CROWN	333
CABDOOR MOLDING	336
COUNTEREDGDE	336
COVE CROWN	334
CROWN	334
CROWN RISER - 4" TALL RANDOM LENGTH	335
CROWN RISER - 6" TALL RANDOM LENGTH	335
FURNITURE BASE	334
GATEWAY	339
IMPERIAL CROWN	333
INCORN	337
LARGE COVE CROWN	334
LIGHT RAIL	338
LIGHT RAIL SHAKER	338
MID SHAKER CROWN	333
MIRROR MOLDING	338
MULLION STRIP	335
OUTCORN	337
OUTCORN22	337
OUTCORNSHAKER	337
SCRIBE	336
SHAKER CROWN	333
SHIPLAP	335
SQUARE SHOE	339
TOE KICK - FINISHED	335

OFFICE FURNITURE - INDEX

BOOKCASES	263-268
BOOKCASES WITH DOORS	268-269
DIMENSIONS	259-261
EASY REACH	273
FILE CABINET	274-275
KEYBOARDS	276
LOCKER CABINETS	270-271
OFFICE BASE WITH 3 DRAWERS	274
OFFICE BASE WITH DRAWER AND DOOR	272
OFFICE BASE WITH FULL HEIGHT DOOR	272
OFFICE DESK WITH DRAWER	273

PANELS - INDEX

BASE BACK PANELS	280
BASE END PANELS (1/2" THRU 6") ANGLED, AND RAISED END PANELS INCLUDED	283-287
BEADED BBS	280
DECORATIVE END PANEL	283
INTEGRATED END PANEL	281
OFFICE END PANELS	281, 292
SHEET STOCK	280
SKINS	279
TALL END PANELS (1/2" THRU 6") ANGLED, AND RAISED END PANELS INCLUDED	281-299
VANITY END PANELS	292-293
WAINSCOT	282
WALL END PANELS (1/2" THRU 6") ANGLED, AND RAISED END PANELS INCLUDED	288-291
X END PANEL	282

WOOD PRODUCTS - INDEX

BUNN FEET	323-324
CORBELS	326-327
PEDESTALS	325
POSTS	328-329

STORAGE AND ORGANIZERS - INDEX

BASE 15" TWO-TIER COOKWARE	306
BASE 24" TWO-TIER COOKWARE	306
BASE 3 PRONG TOWEL BAR	309
BASE BLIND CORNER SOLID BOTTOM TWO-TIER OPTIMIZER	307
BASE BLIND CORNER THE CLOUD	307
BASE BLIND CORNER WIRE BOTTOM TWO-TIER OPTIMIZER	307
BASE CHROME MIXER LIFT	308
BASE CLEANING ORGANIZER PULL OUT	303
BASE COOKIE TRAY PULL-OUT	305
BASE EASY ACESS CORNER PANTRY	308
BASE FILLER SPICE PULL-OUT	303
BASE FLEXIBLE DRIP TRAY GRAY POLYMER	309
BASE FOOD CONTAINER STORAGE	306
BASE METAL TRAY DIVIDER	305
BASE PEG BOARD ACCESSORIES	310
BASE PREMIERE UNDERSINK PULLOUT	309
BASE PULL-OUT	304
BASE PULL-OUT W/CANNISTERS	305
BASE PULL-OUT W/KNIFE BLOCK AND CANISTERS	304
BASE PULL-OUT W/TRAY DIVIDER	303
BASE UNDER SINK CHROME BASKET	308
BASE VINYL DRAWER PEG BOARD	310
BOTTOM MOUNT WASTE ROLLOUT	321
BOTTOM MOUNT WASTE ROLLOUT FOR FULL HEIGHT DOOR	321
CHARGING DRAWER	311
CHROME SOFT CLOSE PULL OUT PANTRY - 448 MODEL	319
CUT OUT CUTTING BOARD	320
DEEP DRAWER DIVIDER INSERT	310
DRAWER BREADBOX COVER	313
DRAWER CHARGING UNIT	311
DRAWER SHALLOW DRAWER DIVIDER INSERT	313
DRAWER SILVERWARE TRAY INSERT	314
DRAWER SINK FRONT TIP OUT TRAY	312
DRAWER STAINLESS STEEL TIP OUT TRAY	312
DRAWER TWO TIER SILVERWARE DRAWER	314
DRAWER UTENSIL TRAY INSERT	315
DRAWER WOOD DRYING RACK	312
DRAWER WOOD SILVERWARE DIVIDER	315

CONTINUED ON PAGE 408

STORAGE AND ORGANIZERS - INDEX

DRAWER WOOD SPICE INSERT	313
FILE HARDWARE-RAS-FD-SERIES	319
KNIFE CENTER (4KCB)	316
MAGNABASE DEEP DRAWER ORGANIZER	310
RECYCLING CENTER 5BBSC SERIES	320
REV-A-SHELF WASTEBASKET LID	320
STANDARD KNIFE BLOCK	316
TALL PANTRY ORGANIZER	319
TWO-TIER FILE DRAWER SYSTEM	319
VANITY BASE ORGANIZER	317
VANITY GROOMING ORGANIZER WITH OUTLET	317
VANITY GROOMING ORGANIZER WITHOUT OUTLET	317
VANITY HAMPERS HRV SERIES	318
VANITY L-SHAPED ORGANIZER	318
VANITY OUTLET DRAWER	318
WASTEBASKET LID	321
WAVE KNIFE BLOCK	316

TALL CABINETS - INDEX

ANGLED BASE DEPTH UTILITY END	248
ANGLED CORNER LINEN	237
CORNER LINEN	237
DIMENSIONS	223-226
DOUBLE OVEN PANTRY	256
INVERTED LINEN CLOSET	235-236
INVERTED PANTRY	246-247
LINEN CLOSET	227-230
LINEN CLOSET WITH DRAWERS	231-234
LINEN FRONT	238
PANTRY CLOSET WITH DRAWERS	244-245
PANTRY FRONT	252
PANTRIES	239-243
PANTRIES WITH MICROWAVES	253-254
ROLLOUTS - CLASSIC	250
ROLLOUTS - DOVETAIL	250
SINGLE OVEN PANTRY	254-255
WALK THRU PANTRY	249
WALK THRU PANTRY FRONT	252

VANITIES - INDEX

CORNER SINK BASE	216
DIAGONAL ANGLE VANITY	210
DIAGONAL CORNER WITH SHELF	209
DIMENSIONS	199-206
EASY REACH WITH SHELF	209
FOUR DRAWER BASE	210
FULL HEIGHT DOORS	208
FURNITURE BASE VANITY	218
HAMPER PULLOUT	220
HANDICAP WALL MOUNT	219
MEDICINE CABINET	221
PULLOUT IRONING BOARD	220
THREE DRAWER VANITY	210
TOILET TOPPER	221
TUB FRONT	211
VANITY ANGLE TRANSITION	209
VANITY BASE	207
VANITY SINK	212
VANITY SINK BASE WITH TUB DRAWERS	215-216
VANITY SINK WITH CENTER DRAWERS	214
VANITY SINK WITH DOUBLE DRAWERS	217
VANITY SINK WITH SIDE DRAWERS	213
VANITY WITH TRASH ROLLOUT	220

SAMPLE PRODUCTS - INDEX

BASE MINI CABINET	398
DOOR AND DRAWER FRONT COMBO	397
DOOR RACK	399
DOOR STARTER KIT	400
DOORS	397
FACE FRAME, DRAWER, AND DRAWER FRONT	397
MERCHANDISER	398
MERCHANDISER SUPPORT RAILS	399
MERCHANDISER DOOR BRACKETS	399
MOLDING CHAIN	400
SIGNS	399
SAMPLE BLOCKS	400

WALL CABINETS - INDEX

APOTHECARY DRAWER CABINETS	106-107
APPLIANCE GARAGE WALL CABINETS	93-95
ARCHED VALANCE RAIL BOTTOM	76
BLIND CORNER	79-81
DIAGONAL ANGLE WALL	108
DIAGONAL WALLS	84
DIAGONAL WALLS WITH APPLIANCE GARAGE, OR LAZY SUSAN	84-88
DIMENSIONS	59-65
DOUBLE SECTION	109-116
DRAWER WALL CABINET - WITH FULL EXTENSION DRAWER	102-105
EASY REACH	83
EXTENDED STILES	117-125
ISLAND WALL	82
MICROWAVE OVEN CABINETS	89-92
ORGANIZER WALL CABINETS	101
RANGE HOOD CABINET	75
RANGE HOOD LINER	75
REFRIGERATOR WALL	77-78
SPICE PULLOUT	74
SPICE RACK	74
STANDARD WALL CABINETS	66-72
V ANGLE WALL	108
WALL PLATE RACK	100
WINE CUBBIES	99
WINE RACKS	96-99

WALL HOODS - INDEX

OMEGA RANGE HOODS AND PRODUCTS	129-142
STANISCI RANGE HOODS AND PRODUCTS	144-155

NOTES OR ADDITIONS